TITLE

WIFI 6E FLEX CABLE BALANCE ANTENNA

TABLE OF CONTENTS

1. SCOPE
2. PRODUCT DESCRIPTION
3. GENERAL SPECIFICATION
4. PRODUCT STRUCTURE INFORMATION
5. APPLICABLE DOCUMENTS
6. ANTENNA SPECIFICATION
7. MECHANICAL SPECIFICATION
8. ENVIRONMENTAL SPECIFICATION
9. PACKING
10. OTHER MOLEX ANTENNA PRODUCTS
11. CHANGE HISTORY

WIFI 6E FLEX CABLE BALANCE ANTENNA

1.0 SCOPE

This Product Specification covers the mechanical, electrical and environmental performances specification for WiFi 6E flex cable balance antenna.

2.0 PRODUCT DESCRIPTION

2.1 PRODUCT NAME AND SERIES NUMBER (S)

Product name: WiFi 6E flex cable balance antenna
Series Number: 146153 Series

2.2 DESCRIPTION

Series 146153 is a balanced, dipole-type, high efficiency antenna for 2.4/5/6 GHz applications, including WiFi 6E, Bluetooth, Zigbee and others. This antenna is made from poly flexible material with small size 35*9*0.1mm and has double-sided adhesive tape for easy “peel and stick” mounting. This balanced antenna with ground plane independent design offers various cable length options for ease of integration into various devices.

2.3 FEATURES

- 2400~2500MHz,5150~5850MHz,5925~7125MHz, linear polarization
- Ground plane independent, balanced dual band antenna
- Flex size 35 x 9 x 0.1mm (not contain solder area)
- MHF & U.FL compatible connector (Such as MHF1/MHF4)
- Cable Ø1.13mm, 6 standard length options (50/100/150/200/250/300mm)
- Cable and connector can be customized

Molex 146153 SERIES 3D VIEW

3.0 GENERAL SPECIFICATION

Product name	WIFI 6E FLEX CABLE BALANCE ANTENNA		
Part number	146153		
Frequency	2.4GHz-2.5GHz	5.15GHz-5.85GHz	5.925GHz-7.125GHz
Polarization	Linear		
Operating with matching	-40℃ to 85℃		
Storage with matching	-40℃ to 85℃		
RF Power	2 Watts		
Impedance with matching	50 Ohms		
Antenna type	Flex		
Connector type	146153 0XXX	146153 1XXX	
	Compatible MHF1	Compatible MHF4L	
User Implementation type	Adhesive 3M9077		
Cable diameter	Ø1.13mm		
Cable length	50 mm (P/N for 1461530050/1461531050)		
	100 mm (P/N for 1461530100/1461531100)		
	150 mm (P/N for 1461530150/1461531150)		
	200 mm (P/N for 1461530200/1461531200)		
	250 mm (P/N for 1461530250/1461531250)		
	300 mm (P/N for 1461530300/1461531300)		

Adhesive Application

Bond strength is dependent upon the amount of adhesive-to-surface contact developed. Firm application pressure helps develop better adhesive contact and improves bond strength.
To obtain optimum adhesion, the bonding surfaces must be clean, dry, and well unified. Some typical surface cleaning solvents are isopropyl alcohol/water mixture or heptane.
Ideal tape application temperature range is 70°F to 100°F (21°C to 38°C). Initial tape application to surfaces at temperatures below 50°F (10°C) is not recommended because the adhesive becomes too firm to adhere readily. However, once properly applied, low temperature holding is generally satisfactory.

4.0 PRODUCT STRUCTURE INFORMATION

P/N	146153 0XXX

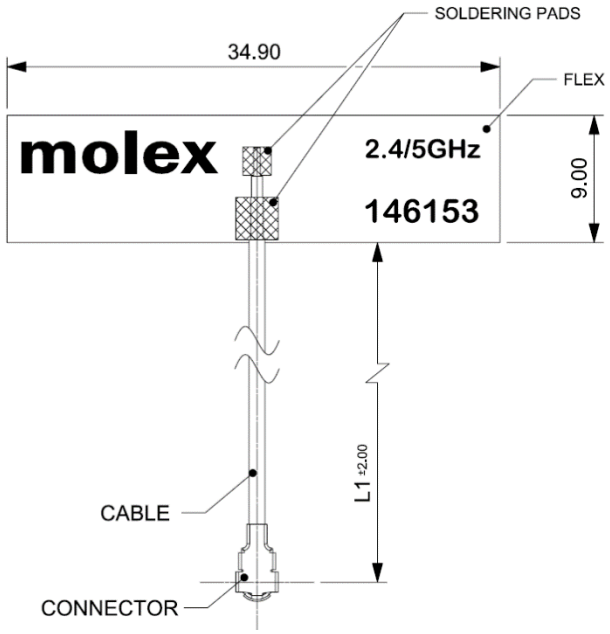

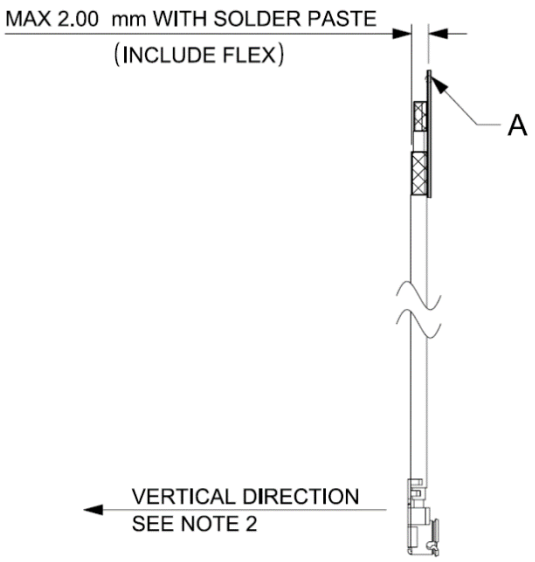

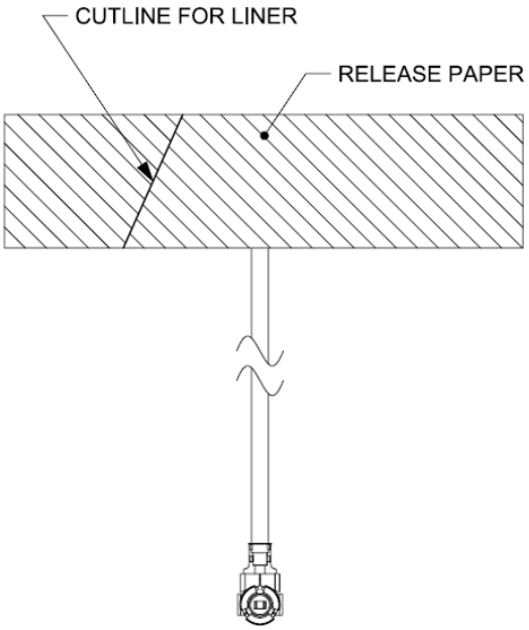

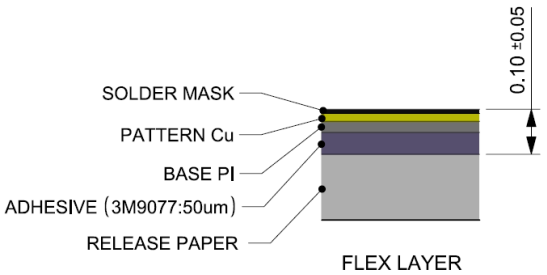

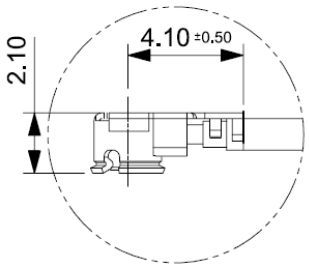

ITEM	MATERIAL NO.	CABLE LENGTH"L1"
1	1461530050	43.3 mm
2	1461530100	93.3 mm
3	1461530150	143.3 mm
4	1461530200	193.3 mm
5	1461530250	243.3 mm
6	1461530300	293.3 mm

NOTES:
1. MATERIAL:
   FLEX SIZE: 34.9*9mm
   CABLE:∅1.13 mm
   CONNECTOR:OD1.13 RF 2.5H U.FL CONNECTOR-PLUG GOLD PLATED (IPEX MHF-I COMPATIBLE)
2. FOR PULL TEST, CAN NOT LIFT UP IN THE VERTICAL DIRECTION.
3. SOLDER MASK:BLACK.
4. THE CONNECTOR WILL BE PROTECTED WITH A CAP.

Mechanical Structure Information for 1461530XXX

P/N	146153 1XXX

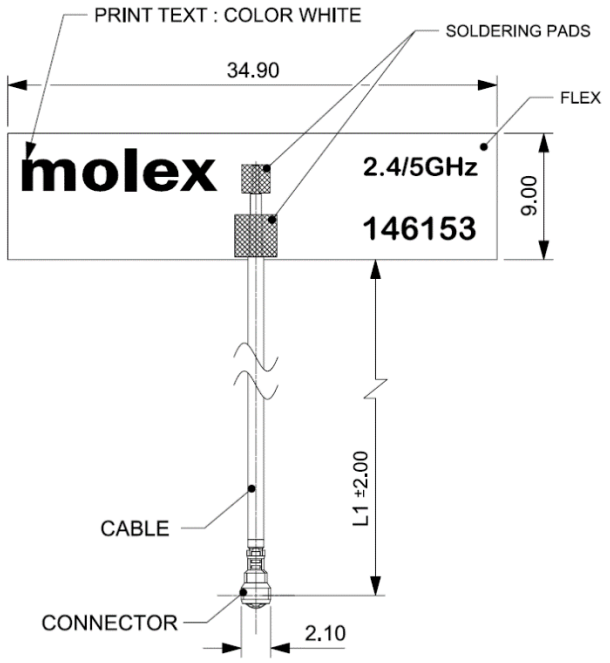

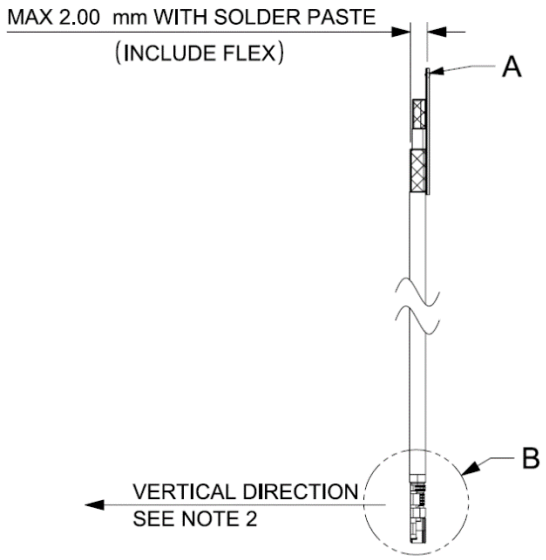

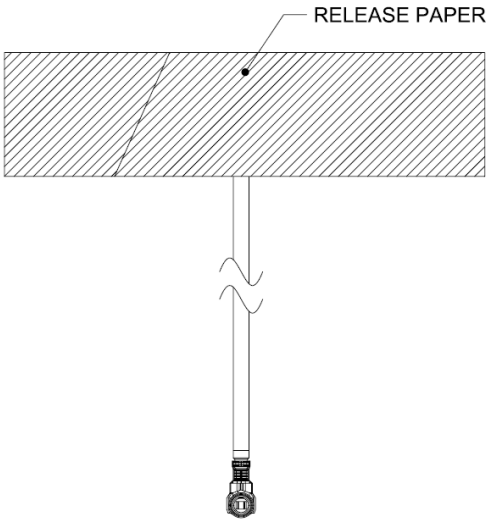

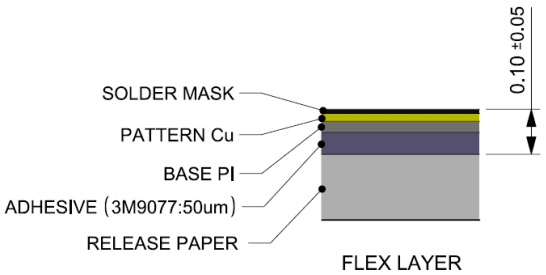

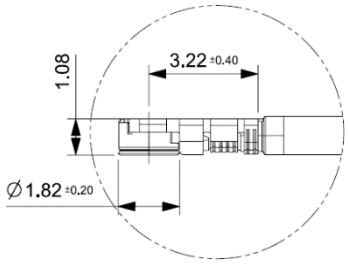

DETAIL B SCALE 8:1
CONNCETOR

ITEM	MATERIAL NO.	CABLE LENGTH"L1"
1	1461531050	43.3 mm
2	1461531100	93.3 mm
3	1461531150	143.3 mm
4	1461531200	193.3 mm
5	1461531250	243.3 mm
6	1461531300	293.3 mm

NOTES:
1. MATERIAL:
   FLEX SIZE: 34.9*9mm
   CABLE:∅1.13 mm
   CONNECTOR:OD1.13 RF 1.4H I-PEX MHF4L CONNECTOR(GOLD PLATED)
2. FOR PULL TEST, CAN NOT LIFT UP IN THE VERTICAL DIRECTION.
3. SOLDER MASK:BLACK.
4. THE CONNECTOR WILL BE PROTECTED WITH A CAP.

Mechanical Structure Information for 1461531XXX

5.0 APPLICABLE DOCUMENTS

DOCUMENT	NUMBER	DESCRIPTION
Sale Drawing (SD)	SD-1461530050	Mechanical Dimension of the product
	SD-1461531050	
Application Guide (AS)	AS-1461530100	Antenna Application and surrounding
Packing Drawing (PK)	PK-1461530100	Product packaging specifications

6.0 ANTENNA SPECIFICATION

All measurements are done of the antenna mounted on a PC/ABS material block of 1.5 mm thickness with VNA Agilent E5071C and Over-The-Air (OTA) chamber. All measurements in this document are done with the part no.1461530100 for different cable length.

6.1 ELECTRICAL REQUIREMENT

6.1.1 ELECTRICAL REQUIREMENTS FOR CABLE LENGHTH 50mm			
P/N	1461530050		
Frequency Range	2.4GHz-2.5GHz	5.15GHz-5.85GHz	5.925-7.125GHz
Peak Gain (Max)	3.2dBi	4.25dBi	5.8dBi
Average Total efficiency	>78%	>79%	>75%
Return Loss	< -10 dB	< -10 dB	< -10 dB

6.1.2 ELECTRICAL REQUIREMENTS FOR CABLE LENGHTH 100mm			
P/N	1461530100		
Frequency Range	2.4GHz-2.5GHz	5.15GHz-5.85GHz	5.925-7.125GHz
Peak Gain (Max)	3.0dBi	4.0dBi	5.5dBi
Average Total efficiency	>75%	>75%	>70%
Return Loss	< -10 dB	< -10 dB	< -10 dB

6.1.3 ELECTRICAL REQUIREMENTS FOR CABLE LENGHTH 150mm			
P/N	1461530150		
Frequency Range	2.4GHz-2.5GHz	5.15GHz-5.85GHz	5.925-7.125GHz
Peak Gain (Max)	2.8dBi	3.7dBi	5.2dBi
Average Total efficiency	>72%	>70%	>65%
Return Loss	< -10 dB	< -10 dB	< -10 dB

6.1.4 ELECTRICAL REQUIREMENTS FOR CABLE LENGHTH 200mm			
P/N	1461530200		
Frequency Range	2.4GHz-2.5GHz	5.15GHz-5.85GHz	5.925-7.125GHz
Peak Gain (Max)	2.6dBi	3.5dBi	4.8dBi
Average Total efficiency	>69%	>66%	>60%
Return Loss	< -10 dB	< -10 dB	< -10 dB

6.1.5 ELECTRICAL REQUIREMENTS FOR CABLE LENGHTH 250mm			
P/N	1461530250		
Frequency Range	2.4GHz-2.5GHz	5.15GHz-5.85GHz	5.925-7.125GHz
Peak Gain (Max)	2.4dBi	3.2dBi	4.5dBi
Average Total efficiency	>66%	>63%	>56%
Return Loss	< -10 dB	< -10 dB	< -10 dB

6.1.6 ELECTRICAL REQUIREMENTS FOR CABLE LENGHTH 300mm			
P/N	1461530300		
Frequency Range	2.4GHz-2.5GHz	5.15GHz-5.85GHz	5.925-7.125GHz
Peak Gain (Max)	2.2dBi	2.8dBi	4.2dBi
Average Total efficiency	>63%	>59%	>51%
Return Loss	< -10 dB	< -10 dB	< -10 dB

Note that the above antenna performance is measured with just the antenna mounted on a PC/ABS block to similar a free-space condition. When implement into the system, the frequency resonant might be off-tune due to the loading of surrounding components especially metal plane. This off-tune can be compensated through matching. Although module manufacturers specify a peak gain limit, it is based on free-space conditions. The peak gain will be degraded by 1 to 2dBi in the actual implementation as the radiation pattern will change due to the surround components. As such, during selection of antenna, you can select one with high peak gain to compensate for the loss. Molex can offer assistant to choose the best location and best tuning in-order to meet this peak gain requirement.

6.2 CABLE LOSS

DESCRIPTION	TEST CONDITION	REQUIREMENTS		
Frequency Range	2 GHz~7.125GHz	2.0GHz~3.0GHz	5GHz~6GHz	6GHz~7.125GHz
Attenuation	1m cable measured by VNA5071C	≤3.5dB/m	≤5.5dB/m	≤6.5dB/m

Balance antenna resonance is insensitive to cable's length, but the cable's loss will affect the total efficiency.

7.0 MECHANICAL SPECIFICATION

All measurements in this document are done with the part no.1461530100 for different cable length.

DESCRIPTION	TEST CONDITION	TEST RESULT
Pull Test	1. Test machine: Max intelligent load tester 2. Stick the flex antenna on a plastic board, pull cable in axial direction.	Pull force >8N
Un-mating force (connector)	Solder the receptacle connector to the test board ,then place the board and plug on push-on/pull-off machine, and repeat mating and un-mating 30 cycles at a speed 25±3mm/min. along the mating axis.	Un-mating force : 0.5 kgf min

8.0 ENVIRONMENTAL SPECIFICATION

DESCRIPTION	SPECIFICATION
Temperature /Humidity cycling	1.The device under test is kept for 30 mins in an environment with a temperature of -40 ℃. 2. Kept for 4 Hours in an environment with a temperature of 85 ℃. 3. Kept for 2 Hours in an environment with a temperature of 125 ℃. 4. The cycle is repeated until a total of 40 cycles have been completed. Hereafter the conditions are stabilized at room temperature. Transfer temperature 8℃ per min. 5. Parts should meet RF spec before and after test. 6. No cosmetic problem (No damage, no corrosion.)
Temperature Shock	1.The device under test at -40 ℃-125 ℃ by 100 cycles, Dwell of 30 mins, transition time between Dwell 30 secs (~ 61 mins / cycle) and each item should be measured after exposing them in normal temperature and humidity for 24 h. 2. Parts should meet RF spec before and after test. 3. No cosmetic problem（No damage, no corrosion）.
High Temperature	1.Temperature:125℃, time:1008 hours 2.There is no substantial obstruction to air flow across and around the samples, and the samples are not touching each other 3. Parts should meet RF spec before and after test. 4. No cosmetic problem（No damage, no corrosion）.
Salt mist test	1. The device under test is exposed to a spray of a 5% (by volume) resolution of NACL in water for 2 hours. Thereafter the device under test is left for 1 week in room temperature at a relative humidity of 95%. The cycle is repeated until a total of 2 cycles have been completed. Here after the conditions are stabilized at room temperature. 2. Parts should meet RF spec before and after test. 3. No visible corrosion. Discoloration accept.

9.0 PACKING

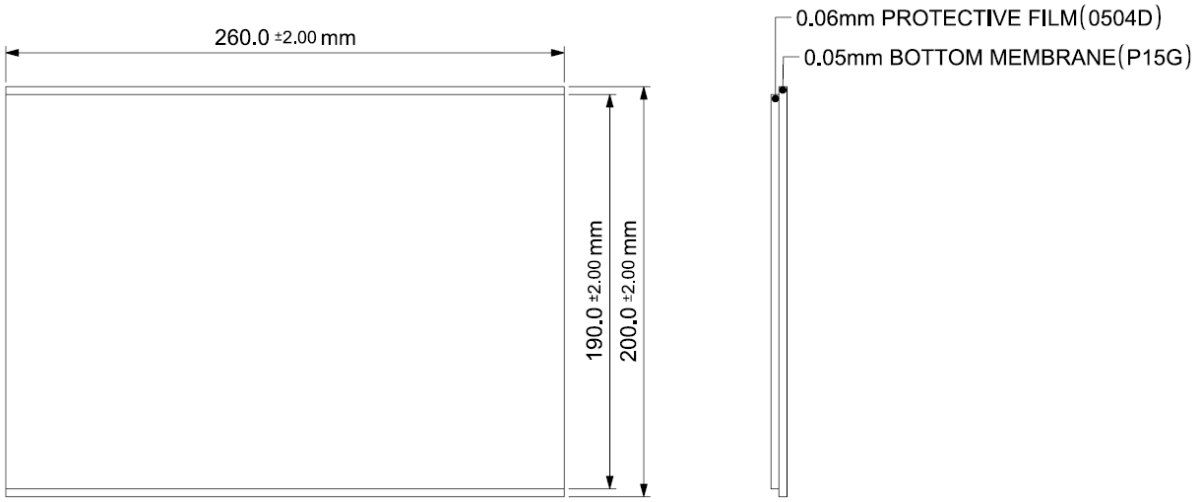

PET FILM

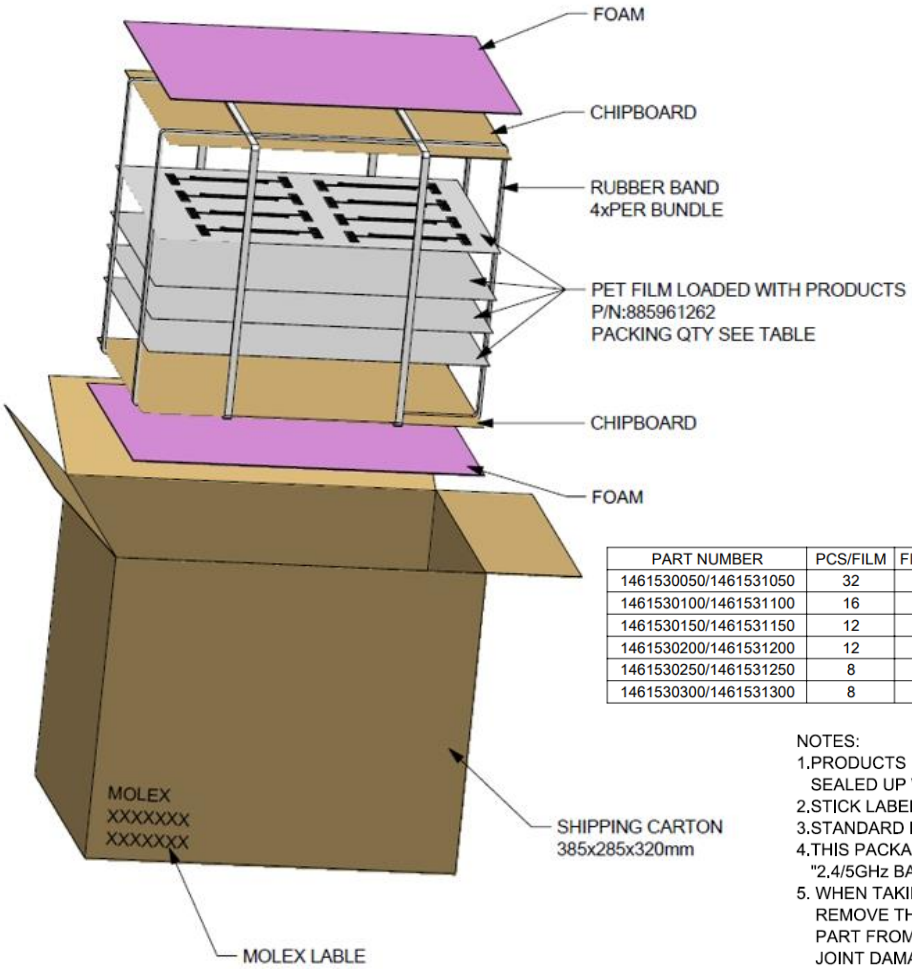

PART NUMBER	PCS/FILM	FILM/BUNDLE	BUNDLE/CARTON	QTY/CARTON
1461530050/1461531050	32	40	4	5120PCS
1461530100/1461531100	16	40	5	3200PCS
1461530150/1461531150	12	40	5	2400PCS
1461530200/1461531200	12	40	5	2400PCS
1461530250/1461531250	8	40	5	1600PCS
1461530300/1461531300	8	40	5	1600PCS

NOTES:
1.PRODUCTS MUST BE PACKED IN CARTONS AND SEALED UP WITH TAPE.
2.STICK LABEL WITH PART NUMBER AND DATE CODE
3.STANDARD PACKAGING QUANTITY:SEE TABLE
4.THIS PACKAGING SPECIFICATION TO BE USED FOR "2.4/5GHz BALANCE FLEX ANTENNA".
5. WHEN TAKING PRODUCT FROM PET FILM, PLEASE REMOVE THE COVER TAPE FIRST, THEN PICK UP THE PART FROM FLEX NOT THE CABLE, TO AVOID SOLDER JOINT DAMAGE.

PACKAGING INFORMATION FOR 146153 Series

10.0 OTHER MOLEX ANTENNA PRODUCT

Please refer to the Antenna products in Molex home page to view all the Molex Antenna products.
https://www.molex.com
Molex, LLC
2222 Wellington Court
Lisle, IL 60532
USA

11.0 CHANGE HISTORY

CHANGE HISTORY		
REV	DATA	DESCRIPTION
F	2020/07/09	Add 6-7.125GHz Frequency Range
F1	2020/08/31	Optimized Part 6.1 Peak Gain
F2	2021/09/06	Updated General Specification Text
F3	2022/11/14	Added section : Other Molex Antenna Product.