Acepur Air Purifier Instruction Manual

Compatible model: AP-A800

Acepur

Please read this instruction manual carefully before using the product and keep it properly for future reference

Product details

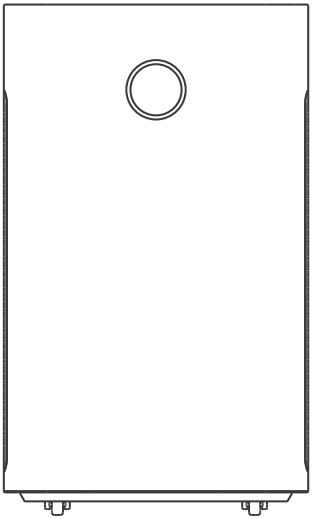

Air purifier host

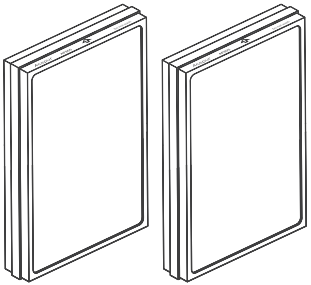

Composite filter×2

Manual

Power cord

Precautions

Note

⚠ This product cannot replace normal ventilation, daily vacuuming, or a range hood used during cooking.

Carry

⚠ When moving the machine, be sure to turn off it and pull out the power plug.
⚠ Make sure the host is stable to prevent the excessive vibration, falling and people injuring.

Installation

⚠ When the filter door is not installed correctly, the host cannot start.
⚠ The air inlet of the host must be at least 20cm (left and right distance) and 10cm (back distance) away from obstructions like walls.
⚠ Where there is abnormal noise, odor, high temperature, irregular fan rotation, and others in the product,please stop using it immediately.
⚠ Please do not put hair, fabric, and others close to the main unit to not be caught in the machine, blocking the air inlet or outlet.
⚠ Do not sit, lean against, recline on or tilt the main unit.
⚠ This product cannot be used to remove carbon monoxide (CO) or radon (Rn), so it cannot be used as safety equipment when there are combustion and hazardous chemical accidents.
⚠ Please use the special filter for this product and do not use other brands and models of filters.

Precautions for using power supply

AC power cords and sockets must be used as directed to avoid fire, electric shock, or damage.
⚠ Do not pinch, bend, or twist the power cord excessively, otherwise the core may be exposed or broken.
⚠ Do not pull on the power cord when disconnecting it.
⚠ Do not use inappropriate sockets.
⚠ Please use the supplied power cord.
⚠ Non-professionals are not allowed to repair, modify or dismantle the machine.
⚠ When the power cord is damaged, it must be replaced with a special power cord or a special component purchased from the manufacturer or service department.
⚠ Before performing maintenance work or moving the air purifier, disconnect the power cord from the socket.

Do not use it under the following conditions, or else there will be electric shock, fire and other damage:
⚠ In unstable places like the place where it is likely to tilt and fall, it is not allowed to use this product.
⚠ In places with high temperature, humidity and water exposure, such as bathrooms, it is not allowed to use this product.

Danger

⚠ Do not let water or any other liquid or flammable cleaning agents enter the product, avoiding electric shock or fire.
⚠ Do not use water or any other liquid or flammable cleaner to clean the product, avoiding electric shock or fire.
⚠ Do not spray any flammable materials like pesticides or perfume around the product.

Warning

⚠ Please check whether the voltage marked on the product matches the local power supply voltage before connecting the product to the power supply.
⚠ If the soft cord of the power cord is broken, it must be replaced by full-time personnel from the manufacturer or maintenance department to avoid danger.
⚠ If the plug, power cord, or product itself is damaged, do not use this product.
⚠ People with incapacity or incomplete capacity must use this product accompanied by a guardian.

Product introduction

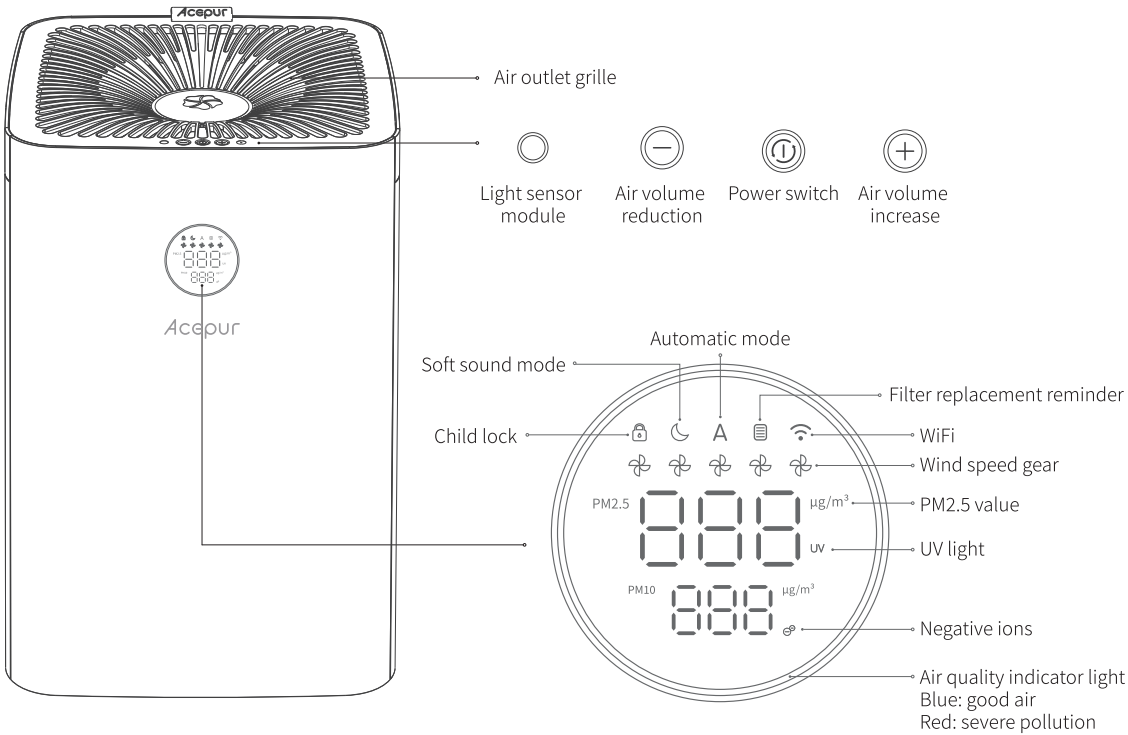

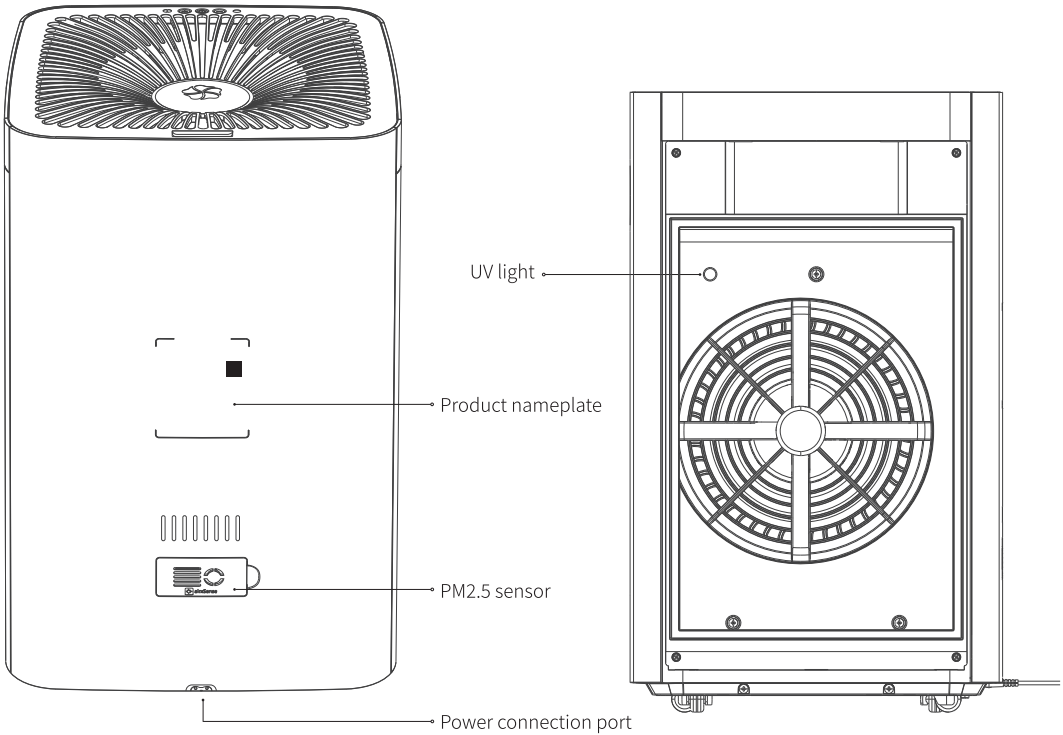
UV light
Product nameplate
PM2.5 sensor
Power connection port

Installation

1. Take out the filter from the machine.

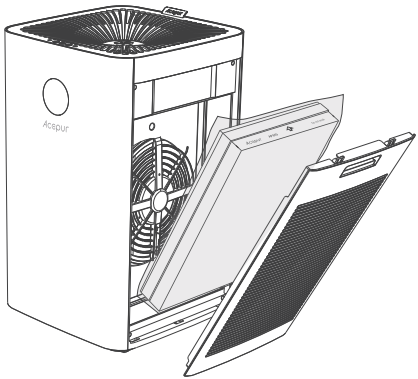

2. Unclose the filter transparent bag.

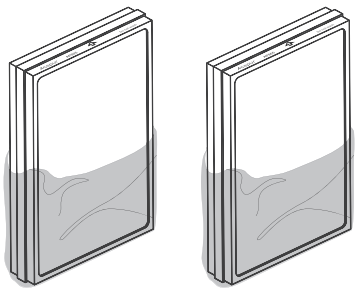

3. Insert the filters on both sides into the machine in the direction indicated by the arrow.

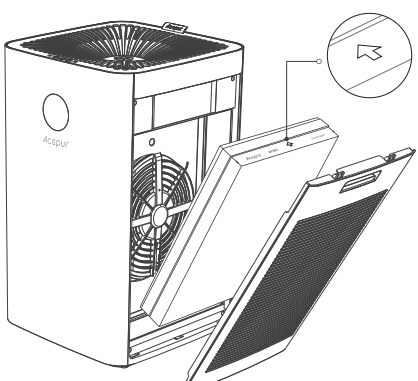

4. Connect the power, insert the power cord into the power connection port and connect the power.

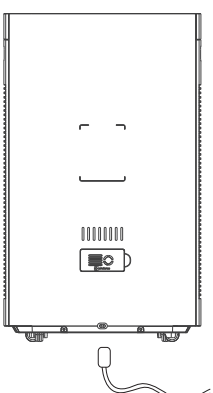

APP download

⚠ Please connect to the Internet to make the product smarter.

Scan the QR code and download the Smart Life APP

- After downloading and installing the APP, power on the machine and make sure it is powered on.
- Connect your phone to the home WiFi network (2.4GH2), and make sure the phone, purifier, and router are close together.
- Open the APP and register/log in according to the APP instructions when using it for the first time.
- Go to the APP homepage and click "+" in the upper right corner to add a device.

Add manually

If the device is not scanned, click on the purifier in "Manual Add", find the corresponding model device, press and hold the "-" key, and follow the instructions on the page to complete the device adding after confirming that the display"📶"flashes quickly.

Use offline

- The default wind speed is automatic mode" Ⓐ ".
- After turning on and running for a while, the color of the air quality indicator light changes with the air quality, and the display also displays the current PM2.5 and PM10 valuesas the environment changes.
- Short press the power button" ⏻ "to turn off the product.

Adjust wind speed

Automatic mode:

In the automatic mode, the device selects the wind speed gear according to the ambient air quality, and the automaticmode indicator light " Ⓐ "and the current wind speed indicator light will light up.

Manual mode:

Short press to shift up" ⊕ " or down" ⊖ ", and the machine

enters manual mode and the gear is raised or lowered by one gear from the current gear.

Gear wind speed:

First gear wind speed	✣
Second gear wind speed	✣ ✣
Three gear wind speed	✣ ✣ ✣
Fourth gear wind speed	✣ ✣ ✣ ✣
Fifth gear wind speed	✣ ✣ ✣ ✣ ✣

Cleaning and maintenance

The power plug must be pulled out before cleaning the product.

1. Clean the machine body:
   ① Wipe away stains with a soft cloth.
   ② Stubborn stains that cannot be easily wiped off can be wiped with a soft cloth dipped in an appropriate amount of neutral detergent.

Note:

※During maintenance, do not scratch the machine shell with hard objects. When disassembling the panel, please operate following the instructions and do not damage the machine parts.

※Be sure not to use abrasive, corrosive or flammable cleaners (such as bleach or alcohol) to clean any part of this product.

※Be sure not to use it in places with high temperature, humidity, or water like bathrooms.

Note:

The pictures attached are for reference only, and the actual product shall prevail.

*Our company reserves the right to change product design and specifications without prior notice.

*If there are any problems resulting from ambiguity, errors, printing, etc. in this manual, this company reserves the final right of interpretation.

Clean the pri-filter

1. Remove the side grille, take out the pri-filter in the direction of the arrow at ①② on the back, and then clean the pri-filter with clean water (be sure to unplug the power cord before cleaning).

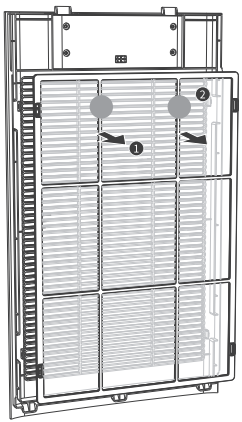

2. After cleaning the pri-filter, please align the holes and install it back to the side grille.

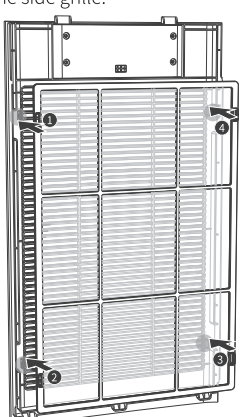

Clean the air outlet grille

1. Pull up the orange handle and remove the air outlet grille (make sure to unplug the power cord before cleaning).

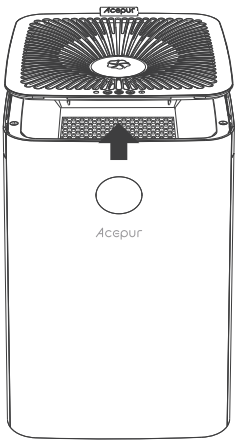

2. The outlet grille can be rinsed with clean water, but it must be dried before its reinstallation and use.

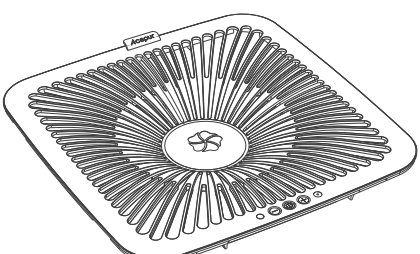

3. To reinstall the air outlet grille, please align the holes and install it on the top of the product. Then, press the air outlet grille downward (improper alignment and forced pressing may cause damage to the parts).

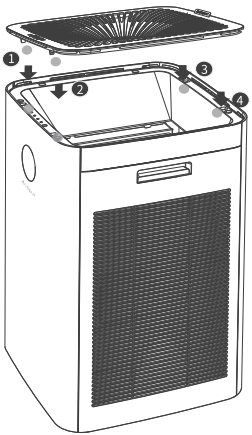

Replace high efficiency filter

- When the screen replacement high-efficiency filter indicator "▤"light lights up, the high-efficiency filter must be replaced to ensure the purification effect.
- Filter reset method: Press and hold the "⊕" and "⊖" buttons at the same time for 5 seconds. If the light goes out, the filter element is reset successfully.

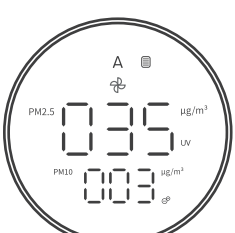

Filter cleaning and replacement

1. The filter replacement is alerted by the built-in program. However, with different pollution levels of the actual application environment, the service life of the filter is different. It can be judged and replaced in time based on the sound volume and smell generated by the machine.
2. Cleaning method
①HEPA filter
When there is dust on the surface of the HEPA filter, a vacuum cleaner with a low wind speed or a hair dryer with a cold wind speed can be used to absorb or blow out the accumulated dust and dust on the surface of the HEPA filter, extending the service life of the filter. It is recommended to clean it every 1 month and do not wash it with water.
② Activated carbon mesh cleaning
The activated carbon mesh must be left out in the heat of the sun regularly for 3-4 hours to complete the cleaning. It is recommended to clean it every 1 month and washing is not allowed.

Note
※For different places and methods of use (e.g A home with many smokers), the filter replacement cycle may needs to be shortened. However, if the effect is not good, please replace it in time.
※When the machine is not used for a long time, please wash the parts and dry them. Please do not place it in places with high temperature, high humidity, direct sunlight, or a lot of garbage and dust."

⚠ For the specific installation process, please replace the filter referring to the previous chapter "Installation".

The high-efficiency filter cannot be washed

Basic parameter information

Product model	AP-A800	CADR value (particulate matter)	800m^3/h
Product size	14.2*14.2*23.4in	CADR value (formaldehyde)	400m^3/h
Rated Voltage	110-120V	Rated input Power	90W
Rated Frequency	60Hz	Product net weight	29.3lbs
WiFi module	2.4GHz, supporting mobile phone remote control	Noise	66dB(A)
Maximum range of particle sensor	0-999 micrograms/cubic meter	Particulate matter sensor mass concentration consistency (PM2.5 standard value)	±15%@501~999 μg/m3 ±10%@101~500 μg/m3 ±10 μg/m3@0~100 μg/m3

*FCC ID: 2BH7X-APA800.

Troubleshooting

Problem	Possible solutions
The product does not work even when plugged in	Check whether the filter is installed in place and make sure that the equipment is placed in a relatively level position.
The airflow at the air outlet is obviously weaker than before	When the filter or pri-filter is clogged, clean the pri-filter and replace it with a new one.
The air quality has remained unchanged	In an environment with poor air tightness, external pollution will continue to enter it, and the purification time may be prolonged; the machine is always in first gear mode, please switch it to a higher wind speed level or automatic mode to improve purification efficiency.
The product emits a strange smell loud	In the initial stage of using the product, there may be a slight odor, and it is normal. When the life of the filter is about to end, it may also has odor. In this case, please replace the relevant filter.
The product sound is too loud	If the product is too loud, you may change the wind speed to a lower wind speed level. When it is used in the bedroom at night, the wind speed mode can be set to sleep mode.
The purifier display does not light up	Check whether the indoor light is enough. When the purifier is in smart mode and the light is dark, the product automatically turn off the screen based on the surrounding environment, preventing the excessive brightness from affecting your rest.

WE NEED YOUR SUPPORT

We welcome you to POST AN UNBIASED REVIEW on our Amazon product page so that others get benefits from your experience. As a growing business, we know how precious your time is, so we especially appreciate your time and input. Your support is very important to us! Thanks again!

WARRANTY

To ensure that we meet your needs, we offer one year warranty from the purchase date for defective products with incorrect human operations, not limited to disassembling, burning, soaking and dropping.For any customer product question or honor your warranty, please write to airxco@yue-x.com.

This device complies with part 15 of the FCC Rules. Operation is subject to the following two conditions: (1) This device may not cause harmful interference, and (2) this device must accept any interference received, including interference that may cause undesired operation.

Any Changes or modifications not expressly approved by the party responsible for compliance could void the user's authority to operate the equipment.

Note: This equipment has been tested and found to comply with the limits for a Class B digital device, pursuant to part 15 of the FCC Rules. These limits are designed to provide reasonable protection against harmful interference in a residential installation. This equipment generates uses and can radiate radio frequency energy and, if not installed and used in accordance with the instructions, may cause harmful interference to radio communications. However, there is no guarantee that interference will not occur in a particular installation. If this equipment does cause harmful interference to radio or television reception, which can be determined by turning the equipment off and on, the user is encouraged to try to correct the interference by one or more of the following measures:

-Reorient or relocate the receiving antenna.

-Increase the separation between the equipment and receiver.

-Connect the equipment into an outlet on a circuit different from that to which the receiver is connected.

-Consult the dealer or an experienced radio/TV technician for help.

-This equipment complies with FCC radiation exposure limits set forth for an uncontrolled environment. This equipment should be installed and operated with minimum distance 20cm between the radiator & your body.