TEST REPORT

Product Name	:	**Bluewater O - Wireless remote control**
Model Number	:	**RA001**
FCC ID	:	**2BH8P-RA0XY**

Prepared for	:	Bluewater Sweden AB
Address	:	Danderydsgatan 11 11426 Stockholm Sweden
Prepared by	:	EMTEK (Dongguan) Co., Ltd.
Address	:	-1&2F., Building 2, Zone A, Zhongda Marine Biotechnology Research and Development Base, No. 9, Xincheng Avenue, Songshanhu High-technology Industrial Development Zone, Dongguan, Guangdong, China Tel : +86-0769-22807078 Fax: +86-0769-22807079
Report Number	:	EDG2407290154E00201R
Date(s) of Tests	:	July 29, 2024 to September 06, 2024
Date of issue	:	September 06, 2024

Table of Contents

TEST REPORT 1
TEST RESULT CERTIFICATION 3
1 EUT TECHNICAL DESCRIPTION 5
2 SUMMARY OF TEST RESULT 6
3 TEST METHODOLOGY 7
3.1 GENERAL DESCRIPTION OF APPLIED STANDARDS 7
3.2 MEASUREMENT EQUIPMENT USED 8
3.3 DESCRIPTION OF TEST MODES 9
4 FACILITIES AND ACCREDITATIONS 10
4.1 FACILITIES 10
4.2 LABORATORY ACCREDITATIONS AND LISTINGS 10
5 TEST SYSTEM UNCERTAINTY 11
6 SETUP OF EQUIPMENT UNDER TEST 12
6.1 RADIO FREQUENCY TEST SETUP 1 12
6.2 RADIO FREQUENCY TEST SETUP 2 12
6.3 CONDUCTED EMISSION TEST SETUP 13
6.4 SUPPORT EQUIPMENT 14
7 TEST REQUIREMENTS 15
7.1 BANDWIDTH TEST 15
7.2 99% BANDWIDTH 17
Not Applicable 17
7.3 RADIATED SPURIOUS EMISSION 18
7.4 CONDUCTED EMISSIONS TEST 27
7.5 ANTENNA APPLICATION 30

TEST RESULT CERTIFICATION

Applicant	:	Bluewater Sweden AB
Manufacturer	:	Dongguan Filba Water Purification Technology Co., Ltd
EUT	:	Bluewater O - Wireless remote control
Model Name	:	RA001
Trademark	:	Bluewater

Measurement Procedure Used:

APPLICABLE STANDARDS	
STANDARD	**TEST RESULT**
FCC 47 CFR Part 2, Subpart J FCC 47 CFR Part 15, Subpart C	**PASS**
IC RSS-GEN, Issue 5, March 2021 IC RSS-210, Issue 10, April 2020	**PASS**

The above equipment was tested by EMTEK (Dongguan) Co., Ltd.The test data, data evaluation, test procedures, and equipment configurations shown in this report were made in accordance with the procedures given in ANSI C63.10 (2013) and the energy emitted by the sample EUT tested as described in this report is in compliance with the requirements of FCC Rules Part 2, Part 15.249, IC RSS-GEN Issue 5 and IC RSS-210 Issue 10.
The test results of this report relate only to the tested sample identified in this report.

Date of Test : July 29, 2024 to September 06, 2024

Prepared by : Warren Deng

Warren Deng /Editor

Reviewer : Galen Xiao

Galen Xiao /Supervisor

Approved & Authorized Signer :

Sam Lv /Manager

Modified History

Version	Report No.	Revision Date	Summary
	EDG2407290154E00201R	/	Original Report

1 EUT TECHNICAL DESCRIPTION

Product:	Bluewater O - Wireless remote control
Model Number:	RA001
Sample number:	2#
Modulation:	GFSK
Frequency Range:	2440MHz
Number of Channels:	1 Channels
Max Transmit Power:	92.12 dBuV@3m
Antenna Gain:	4.43 dBi
Antenna:	Chip antenna
Power supply:	DC 5V from Adapter DC 3.6V from Battery
Temperature Range:	-20°C ~ +55°C

Note: for more details, please refer to the User's manual of the EUT.

2 SUMMARY OF TEST RESULT

FCC Part Clause	IC Part Clause	Test Parameter	Verdict	Remark
15.207	RSS-GEN Clause 8.8	Conducted Emission	N/A	
15.209	RSS-Gen.8.9 RSS-210 Annex B.10(a)	Radiated Emission	PASS	
15.249	RSS-210 Annex B.10(a)	Radiated Spurious Emission	PASS	
15.249	RSS-210 Annex B.10(a)	Band edge test	PASS	
15.249	RSS-GEN Clause 6.7 RSS-210 Annex B.10 (b)	Emission Bandwidth	PASS	
15.203	RSS-GEN Clause 6.8	Antenna Requirement	PASS	
NOTE1: N/A (Not Applicable) NOTE2: The report use radiated measurements in the restricted frequency bands. In addition, the radiated test is also performed to ensure the emissions emanating from the device cabinet also comply with the applicable limits.				

RELATED SUBMITTAL(S) / GRANT(S):

This submittal(s) (test report) is intended for FCC ID: 2BH8P-RA0XY filing to comply with Section 15.249 of the FCC Part 15, Subpart C Rules.

3 TEST METHODOLOGY

3.1 GENERAL DESCRIPTION OF APPLIED STANDARDS

According to its specifications, the EUT must comply with the requirements of the following standards:
FCC 47 CFR Part 2, Subpart J
FCC 47 CFR Part 15, Subpart C
IC RSS-GEN, Issue 5, March 2021
IC RSS-210, Issue 10, April 2020

3.2 MEASUREMENT EQUIPMENT USED

Conducted Emission Test Equipment

Equipment	Manufacturer	Model No.	Serial No.	Last Cal.	Cal. Interval
EMI Test Receiver	Rohde&Schwarz	ESCI	100137	2024/4/29	1Year
AMN	Rohde&Schwarz	ENV216	101209	2024/4/28	1Year
AMN	Rohde&Schwarz	ENV216	100017	2024/4/28	1Year
RF Switching Unit	CDS	RSU-M2	38401	2024/4/28	1Year
AMN	Schwarzbeck	NNLK8121	8121-641	2024/4/28	1Year
AMN	Rohde&Schwarz	ESH3-Z6	101101	2024/4/28	1Year
AMN	Rohde&Schwarz	ESH3-Z6	101102	2024/4/28	1Year
Power Splitters & Dividers	Weinschel Associates	WA1506A	A1066	2024/4/28	1Year
Current Probe	FCC	F-52	8377	2024/4/28	1Year
Passive voltage probe	Rohde&Schwarz	ESH2-Z3	100122	2024/4/28	1Year

For Spurious Emissions Test

Equipment	Manufacturer	Model No.	Serial No.	Last Cal.	Cal. Interval
EMI Test Receiver	Rohde&Schwarz	ESCI	101415	2024/4/28	1Year
Bi-log Hybrid Antenna	Schwarzbeck	VULB9163	141	2024/5/5	1Year
Pre-Amplifie	HP	8447F	OPTH64	2024/4/28	1 Year
Signal Analyzer	R&S	FSV30	103039	2024/4/28	1 Year
Horn Antenna	Schwarzbeck	BBHA9120D	1272	2024/5/5	1Year
Horn Antenna	Schwarzbeck	BBHA9170	9170-567	2024/5/5	1Year
Pre-Amplifie	LUNAR EM	PM1-18-40	J10100000081	2024/4/28	1Year
Loop antenna	Schwarzbeck	FMZB1519	1519-012	2024/5/5	1Year

For other test items:

Equipment	Manufacturer	Model No.	Serial No.	Last Cal.	Cal. Interval
Wireless Connectivity Tester	R&S	CMW270	102543	2024/4/29	1Year
Automatic Control Unit	Tonscend	JS0806-2	21I8060480	2024/4/29	1Year
Signal Analyzer	KEYSIGHT	N9010B	MY60242456	2024/4/29	1Year
Analog Signal Generator	KEYSIGHT	N5173B	MY61252625	2024/4/29	1Year
UP/DOWN-Converter	R&S	CMW-Z800A	100274	2024/4/29	1Year
Vector Signal Generator	KEYSIGHT	N5182B	MY61252674	2024/4/29	1Year
Frequency Extender	KEYSIGHT	N5182BX07	MY59362541	2024/4/29	1Year
Temperature&Humidity test chamber	ESPEC	EL-02KA	12107166	2024/4/29	1 Year
Signal Analyzer	R&S	FSV30	103039	2024/4/29	1 Year

Conducted Emission Test	Test Software	Farad	Ver.CON-03A1	--	N/A	N/A
Spurious Emissions Test	Test Software	Farad	Ver.RA-03A1	--	N/A	N/A

Remark: *Each piece of equipment is scheduled for calibration once a year.*

3.3 DESCRIPTION OF TEST MODES

The EUT has been tested under its typical operating condition.
The EUT configuration for testing is installed on RF field strength measurement to meet the Commissions requirement and operating in a manner which intends to maximize its emission characteristics in a continuous normal application.
The Transmitter was operated in the normal operating mode. The TX frequency was fixed which was for the purpose of the measurements.

Test of channel included the lowest and middle and highest frequency to perform the test, then record on this report.

The EUT has been tested under its typical operating condition so those modulation and channel were used for all test.

Pre-defined engineering program for regulatory testing used to control the EUT for staying in continuous transmitting and receiving mode is programmed.

Frequency and Channel list:

Channel	Frequency (MHz)	Channel	Frequency (MHz)	Channel	Frequency (MHz)	Channel	Frequency (MHz)
1	**2440**						

Test Frequency and Channel list:

Lowest Frequency		Middle Frequency		Highest Frequency	
Channel	Frequency (MHz)	Channel	Frequency (MHz)	Channel	Frequency (MHz)
1	2440				

4 FACILITIES AND ACCREDITATIONS

4.1 FACILITIES

All measurement facilities used to collect the measurement data are located at
EMTEK (Dongguan) Co., Ltd.

-1&2F., Building 2, Zone A, Zhongda Marine Biotechnology Research and Development Base, No. 9, Xincheng Avenue, Songshanhu High-technology Industrial Development Zone, Dongguan, Guangdong, China.

The sites are constructed in conformance with the requirements of ANSI C63.7, ANSI C63.10 and CISPR Publication 22.

4.2 LABORATORY ACCREDITATIONS AND LISTINGS

Site Description

EMC Lab.	:	**Accredited by CNAS** The Laboratory has been assessed and proved to be in compliance with CNAS-CL01:2018 The Certificate Registration Number is L3150 **Accredited by FCC** Designation Number: CN1300 Test Firm Registration Number: 945551 **Accredited by A2LA** The Certificate Registration Number is 4321.02 **Accredited by Industry Canada** The Certificate Registration Number is CN0113
Name of Firm	:	EMTEK (DONGGUAN) CO., LTD.
Site Location	:	-1&2/F.,Building 2, Zone A, Zhongda Marine Biotechnology Research and Development Base, No.9, Xincheng Avenue, Songshanhu High-technology Industrial Development Zone, Dongguan, Guangdong, China

5 TEST SYSTEM UNCERTAINTY

The following measurement uncertainty levels have been estimated for tests performed on the apparatus:

Parameter	Uncertainty
Radio Frequency	±1x10^-5
Maximum Peak Output Power Test	±1.0dB
Conducted Emissions Test	±2.0dB
Radiated Emission Test	±2.0dB
Occupied Bandwidth Test	±1.0dB
Band Edge Test	±3dB
All emission, radiated	±3dB
Antenna Port Emission	±3dB
Temperature	±0.5℃
Humidity	±3%

Measurement Uncertainty for a level of Confidence of 95%

6 SETUP OF EQUIPMENT UNDER TEST

6.1 RADIO FREQUENCY TEST SETUP 1

The EUT wireless component's antenna ports(s) of the EUT are connected to the measurement instrument per an appropriate attenuator. The EUT is controlled by PC/software to emit the specified signals for the purpose of measurements.

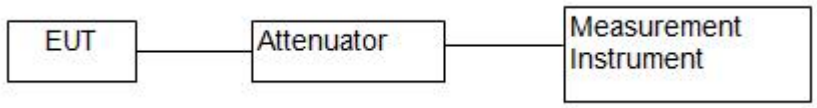

6.2 RADIO FREQUENCY TEST SETUP 2

The test site semi-anechoic chamber has met the requirement of NSA tolerance 4 dB according to the standards: ANSI C63.10. The test distance is 3m.The setup is according to the requirements in Section 13.1.4.1 of ANSI C63.10-2013 and CAN/CSA-CEI/IEC CISPR 22.

Below 30MHz：

The EUT is placed on a turntable 0.8 meters above the ground in the chamber, 3 meter away from the antenna (loop antenna). The Antenna should be positioned with its plane vertical at the specified distance from the EUT and rotated about its vertical axis for maximum response at each azimuth about the EUT. The center of the loop shall be 1 m above the ground. For certain applications, the loop antenna plane may also need to be positioned horizontally at the specified distance from the EUT.

30MHz-1GHz：

The EUT is placed on a turntable 0.8 meters above the ground in the chamber, 3 meter away from the antenna. The maximal emission value is acquired by adjusting the antenna height, polarisation and turntable azimuth. Normally, the height range of antenna is 1 m to 4 m, the azimuth range of turntable is 0° to 360°, and the receive antenna has two polarizations Vertical (V) and Horizontal (H).

Above 1GHz：

The EUT is placed on a turntable 1.5 meters above the ground in the chamber, 3 meter away from the antenna. The maximal emission value is acquired by adjusting the antenna height, polarisation and turntable azimuth. Normally, the height range of antenna is 1 m to 4 m, the azimuth range of turntable is 0° to 360°, and the receive antenna has two polarizations Vertical (V) and Horizontal (H).

(a) Radiated Emission Test Set-Up, Frequency Below 30MHz

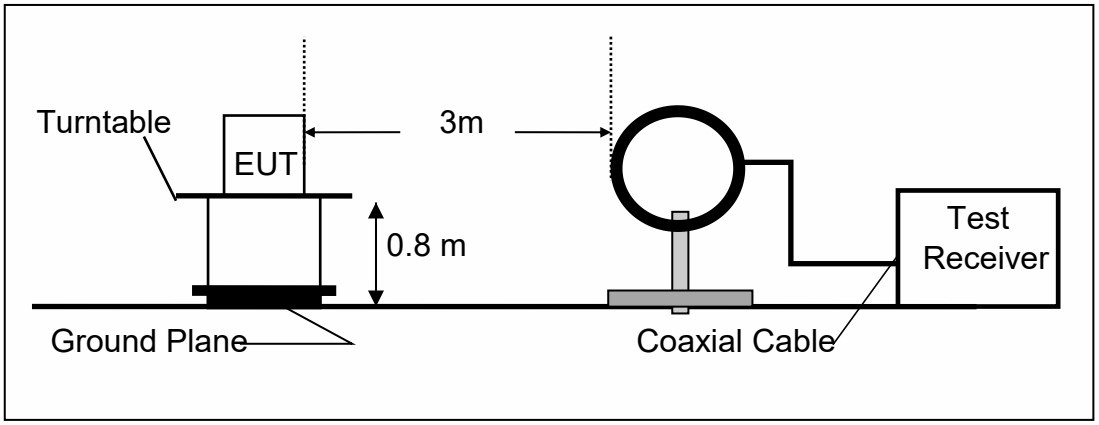

(b) Radiated Emission Test Set-Up, Frequency Below 1000MHz

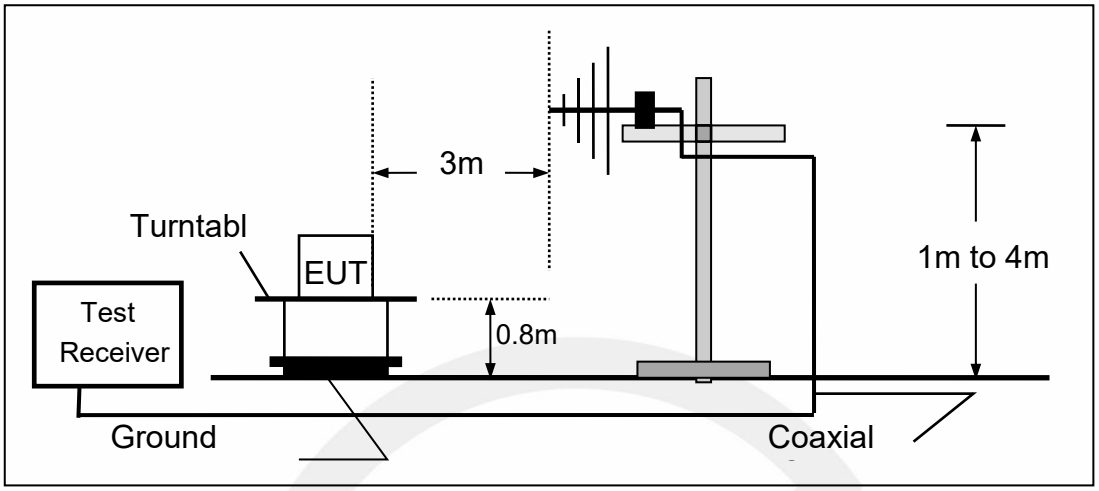

(c) Radiated Emission Test Set-Up, Frequency above 1000MHz

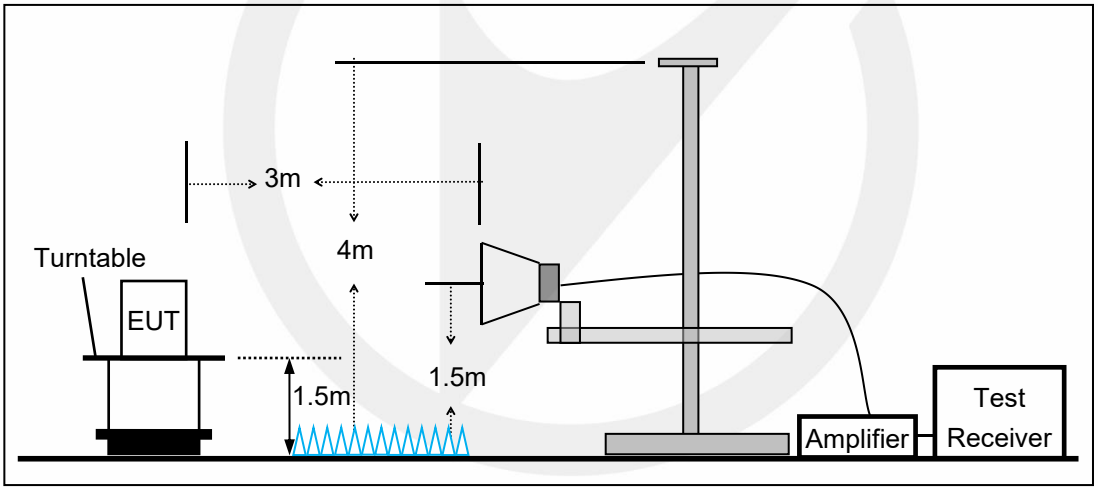

6.3 CONDUCTED EMISSION TEST SETUP

The mains cable of the EUT (maybe per AC/DC Adapter) must be connected to LISN. The LISN shall be placed 0.8 m from the boundary of EUT and bonded to a ground reference plane for LISN mounted on top of the ground reference plane. This distance is between the closest points of the LISN and the EUT. All other units of the EUT and associated equipment shall be at least 0.8m from the LISN.
Ground connections, where required for safety purposes, shall be connected to the reference ground point of the LISN and, where not otherwise provided or specified by the manufacturer, shall be of same length as the mains cable and run parallel to the mains connection at a separation distance of not more than 0.1 m.
According to the requirements in Section 13.1.4.1 of ANSI C63.10-2013 Conducted emissions from the EUT measured in the frequency range between 0.15 MHz and 30 MHz using CISPR Quasi-Peak and average detector mode.

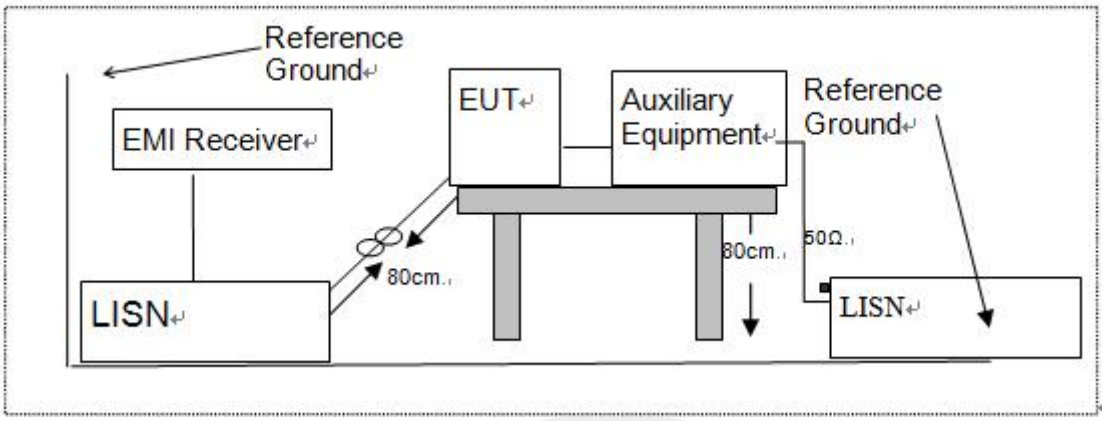

6.4 SUPPORT EQUIPMENT

EUT Cable List and Details			
Cable Description	Length (m)	Shielded/Unshielded	With / Without Ferrite
/	/	/	/

Auxiliary Cable List and Details			
Cable Description	Length (m)	Shielded/Unshielded	With / Without Ferrite
/	/	/	/

Auxiliary Equipment List and Details			
Description	Manufacturer	Model	Serial Number
/	/	/	/

Notes:

1. *All the equipment/cables were placed in the worst-case configuration to maximize the emission during the test.*
2. *Grounding was established in accordance with the manufacturer's requirements and conditions for the intended use.*

7 TEST REQUIREMENTS

7.1 BANDWIDTH TEST

7.1.1 Applicable Standard

According to FCC Part 15.249
According to RSS-GEN Clause 6.7

7.1.2 Conformance Limit

N/A

7.1.3 Test Configuration

Test according to clause 7.1 radio frequency test setup 1

7.1.4 Test Procedure

The EUT was operating in controlled its channel. Printed out the test result from the spectrum by hard copy function. The RF output of EUT was connected to the spectrum analyzer by RF cable and attenuator. The path loss was compensated to the results for each measurement.
Set to the maximum power setting and enable the EUT transmit continuously
Set RBW ≥ 1% of the 20 dB bandwidth(30KHz)
Set the video bandwidth (VBW) ≥ RBW(100KHz).
Set Span= approximately 2 to 3 times the 20 dB bandwidth
Set Detector = Peak.
Set Trace mode = max hold.
Set Sweep = auto couple.
Measure the maximum width of the emission that is constrained by the frequencies associated with the two outermost amplitude points (upper and lower frequencies) that are attenuated by 20 dB relative to the maximum level measured in the fundamental emission.
Measure and record the results in the test report.

Test Results

Temperature:	25˚C
Relative Humidity:	45%
ATM Pressure:	1011 mbar

Note: N/A

Antenna	Frequency[MHz]	20db EBW[MHz]	FL[MHz]	FH[MHz]	Limit[MHz]	Verdict
Ant1	2440	1.216	2439.388	2440.604	---	---

Spectrum Analyzer 1
Swept SA
KEYSIGHT
Input: RF
Coupling: DC
Align: Auto
Input Z: 50 Ω
Corr CCorr
Freq Ref: Int (S)
#Atten: 40 dB
μW Path: Standard
PNO: Best Wide
Gate: Off
IF Gain: Low
Sig Track: Off
#Avg Type: Power (RMS)
Avg|Hold: 100/100
Trig: Free Run
1 Spectrum
Scale/Div 10 dB
Ref Lvl Offset 12.00 dB
Ref Level 30.00 dBm
ΔMkr3 1.216 MHz
-0.41 dB
DL1 -19.43 dBm
Center 2.440000 GHz
#Res BW 100 kHz
#Video BW 300 kHz
Span 4.000 MHz
Sweep 1.00 ms (1001 pts)
5 Marker Table
Mode Trace Scale X Y Function Function Width Function Value
1 N 1 f 2.439 388 GHz -19.47 dBm
2 N 1 f 2.439 976 GHz 0.5745 dBm
3 Δ1 1 f (Δ) 1.216 MHz (Δ) -0.4081 dB
Sep 09, 2024
11:03:12 AM
Frequency
Center Frequency
2.440000000 GHz
Span
4.00000000 MHz
Swept Span
Zero Span
Full Span
Start Freq
2.438000000 GHz
Stop Freq
2.442000000 GHz
AUTO TUNE
CF Step
400.000 kHz
Auto
Man
Freq Offset
0 Hz
X Axis Scale
Log
Lin
Signal Track
(Span Zoom)
Settings
Local

Ant1-2440

7.2 99% BANDWIDTH

7.2.1 Applicable Standard

According to RSS-GEN Clause 6.7

7.2.2 Test Configuration

Test according to clause 7.1 radio frequency test setup 1

7.2.3 Test Procedure

The EUT was operating in Bluetooth mode and controlled its channel. Printed out the test result from the spectrum by hard copy function.
The RF output of EUT was connected to the spectrum analyzer by RF cable and attenuator. The path loss was compensated to the results for each measurement.
Set to the maximum power setting and enable the EUT transmit continuously
Set RBW = 1%-5% OBW(30 KHz).
Set the video bandwidth (VBW) =100 kHz.
Set Span=3 MHz
Set Detector = Peak.
Set Trace mode = max hold.
Set Sweep = auto couple.
Allow the trace to stabilize.
Use the 99 % power bandwidth function of the instrument
Measure the maximum width of the emission.
Measure and record the results in the test report.

7.2.4 Test Results

Temperature:	25˚C
Relative Humidity:	45%
ATM Pressure:	1011 mbar

Not Applicable

7.3 RADIATED SPURIOUS EMISSION

7.3.1 Applicable Standard

According to FCC Part 15.249 and 15.209
According to RSS-Gen.8.9, RSS-Gen 8.10 and RSS-210 Annex B.10

7.3.2 Conformance Limit

According to FCC Part 15.249 and RSS-210 Annex B.10(a): radiated emissions which fall in the restricted bands, as defined in §15.205(a), must also comply with the radiated emission limits specified in §15.209(a) (see §15.205(c)).
According to FCC Part15.205 and RSS-Gen.8.10, Restricted bands

MHz	MHz	MHz	GHz
0.090-0.110	16.42-16.423	399.9-410	4.5-5.15
10.495-0.505	16.69475-16.69525	608-614	5.35-5.46
2.1735-2.1905	16.80425-16.80475	960-1240	7.25-7.75
4.125-4.128	25.5-25.67	1300-1427	8.025-8.5
4.17725-4.17775	37.5-38.25	1435-1626.5	9.0-9.2
4.20725-4.20775	73-74.6	1645.5-1646.5	9.3-9.5
6.215-6.218	74.8-75.2	1660-1710	10.6-12.7
6.26775-6.26825	123-138	2200-2300	14.47-14.5
8.291-8.294	149.9-150.05	2310-2390	15.35-16.2
8.362-8.366	156.52475-156.52525	2483.5-2500	17.7-21.4
8.37625-8.38675	156.7-156.9	2690-2900	22.01-23.12
8.41425-8.41475	162.0125-167.17	3260-3267	23.6-24.0
12.29-12.293	167.72-173.2	3332-3339	31.2-31.8
12.51975-12.52025	240-285	3345.8-3358	36.43-36.5
12.57675-12.57725	322-335.4	3600-4400	(2)
13.36-13.41			

According to FCC Part15.205 and RSS-Gen.8.9, the level of any transmitter spurious emission in Restricted bands shall not exceed the level of the emission specified in the following table

Restricted Frequency(MHz)	Field Strength (μV/m)	Field Strength (dBμV/m)	Measurement Distance
0.009-0.490	2400/F(KHz)	20 log (uV/m)	300
0.490-1.705	24000/F(KHz)	20 log (uV/m)	30
1.705-30	30	29.5	30
30-88	100	40	3
88-216	150	43.5	3
216-960	200	46	3
Above 960	500	54	3

Remark :1. Emission level in dBuV/m=20 log (uV/m)
2. Measurement was performed at an antenna to the closed point of EUT distance of meters.
3. Distance extrapolation factor =40log(Specific distance/ test distance)(dB);
Limit line=Specific limits(dBuV) + distance extrapolation factor.
for the frequency ranges below 30 MHz, a narrower RBW is used for these ranges but the measured value should add a RBW correction factor (RBWCF) where RBWCF [dB] =10*lg(100 [kHz]/narrower RBW [kHz]). , the narrower RBW is 1 kHz and RBWCF is 20 dB for the frequency 9 kHz to 150 kHz, and the narrower RBW is 10 kHz and RBWCF is 10 dB for the frequency 150 kHz to 30 MHz.

Field strength of fundamental and Field strength of harmonics Limit:

Fundamental frequency	Field strength of fundamental (millivolts/meter)	Field strength of harmonics (microvolts/meter)
902-928 MHz	50(94 dBV/m)	500(54 dBV/m)
2400-2483.5 MHz	50(94 dBV/m)	500(54 dBV/m)
5725-5875 MHz	50(94 dBV/m)	500(54 dBV/m)
24.0-24.25 GHz	250(108 dBV/m)	2500(68 dBV/m)

As shown in §15.35(b) and RSS-210 Annex B.10, for frequencies above 1000 MHz, the field strength limits in paragraphs (a) and (b) of this section are based on average limits. However, the peak field strength of any emission shall not exceed the maximum permitted average limits specified above by more than 20 dB under any condition of modulation

For this report

Fundamental Frequency	Field Strength Of Fundamental	Field Strength of Spurious Emissions
2400-2483.5 MHz	AV:94 dBuV/m at 3m distance	AV:54 dBuV/m at 3m distance
	PK:114 dBuV/m at 3m distance	PK:74 dBuV/m at 3m distance

7.3.3 Test Configuration

Test according to clause 7.2 radio frequency test setup 2

7.3.4 Test Procedure

This test is required for any spurious emission that falls in a Restricted Band, as defined in Section 15.205. It must be performed with the highest gain of each type of antenna proposed for use with the EUT. Use the following spectrum analyzer settings:
The EUT was placed on a turn table which is 0.8m above ground plane.
Maximum procedure was performed on the highest emissions to ensure EUT compliance.
Span = wide enough to fully capture the emission being measured
RBW = 1 MHz for f ≥ 1 GHz(1GHz to 25GHz), 100 kHz for f < 1 GHz(30MHz to 1GHz)
VBW ≥ RBW
Sweep = auto
Detector function = peak
Trace = max hold
Follow the guidelines in ANSI C63.10-2013 with respect to maximizing the emission by rotating the EUT, measuring the emission while the EUT is situated in three orthogonal planes (if appropriate), adjusting the measurement antenna height and polarization, etc. A pre-amp and a high pass filter are required for this test, in order to provide the measuring system with sufficient sensitivity. Allow the trace to stabilize. The peak reading of the emission, after being corrected by the antenna factor, cable loss, pre-amp gain, etc., is the peak field strength, which must comply with the limit specified in Section 15.35(b). Submit this data.
Now set the VBW to 10 Hz, while maintaining all of the other instrument settings. This peak level, once corrected, must comply with the limit specified in Section 15.209. If the dwell time per channel of the hopping signal is less than 100 ms, then the reading obtained with the 10 Hz VBW may be further adjusted by a “duty cycle correction factor”, derived from 20log(dwell time/100 ms), in an effort to demonstrate compliance with the 15.209 limit. Submit this data.
Repeat above procedures until all frequency measured was complete.

7.3.5 Test Results

Temperature:	24° C
Relative Humidity:	53%
ATM Pressure:	1011 mbar

■ Spurious Emission below 30MHz (9KHz to 30MHz)

Freq. (MHz)	Ant.Pol. H/V	Emission Level(dBuV/m)		Limit 3m(dBuV/m)		Over(dB)	
		PK	AV	PK	AV	PK	AV
--	--	--	--	--	--	--	--

Note: the amplitude of spurious emission that is attenuated by more than 20dB below the permissible limit has no need to be reported.
Distance extrapolation factor =40log(Specific distance/ test distance)(dB);
Limit line=Specific limits(dBuV) + distance extrapolation factor

■ Field Strength of the fundamental signal

Freq. (MHz)	Ant.Pol. H/V	Emission Level(dBuV/m)		Limit 3m(dBuV/m)		Over(dB)	
		PK	AV	PK	AV	PK	AV
2440	V	92.12	75.59	114	94	-21.88	-18.41
2440	H	88.03	72.41	114	94	-25.97	-21.59

Note: (1) Correct Factor= Antenna Factor +Cable Loss- Amplifier Gain
(2) Emission Level= Reading Level+Probe Factor +Cable Loss

■ Out of Band Emissions

Test mode: GFSK Frequency: Channel 1: 2440MHz

Frequency (MHz)	Polarity	PK(dBuV/m) (VBW=3MHz)	Limit 3m (dBuV/m)	AV(dBuV/m) (VBW=10Hz)	Limit 3m (dBuV/m)
2314.40	H	40.66	74.00	27.21	54.00
2391.99	V	40.70	74.00	28.43	54.00

Test mode: GFSK Frequency: Channel 1: 2440MHz

Frequency (MHz)	Polarity	PK(dBuV/m) (VBW=3MHz)	Limit 3m (dBuV/m)	AV(dBuV/m) (VBW=10Hz)	Limit 3m (dBuV/m)
2499.52	H	41.36	74.00	28.03	54.00
2493.22	V	41.67	74.00	28.56	54.00

Note: (1) All Readings are Peak Value (VBW=3MHz) and Peak Value (VBW=10Hz).
(2) Emission Level= Reading Level+Correct Factor +Cable Loss.
(3) Correct Factor= Ant_F + Cab_L - Preamp
(4)Data of measurement within this frequency range shown " -- " in the table above means the reading of emissions are attenuated more than 20dB below the permissible limits or the field strength is too small to be measured.

Test Model	Band Emissions Low Test By: Ccyf	GFSK	H

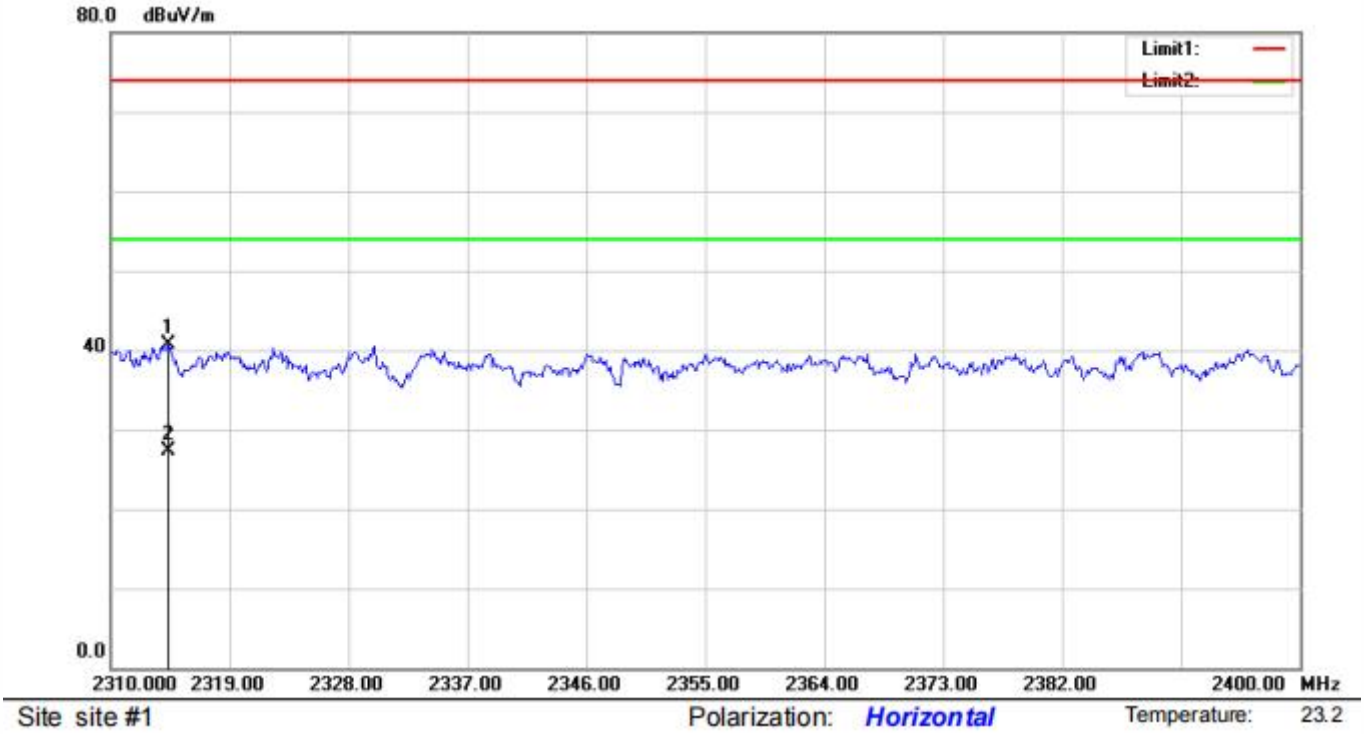

Test Model	Band Emissions Low Test By: Ccyf	GFSK	V

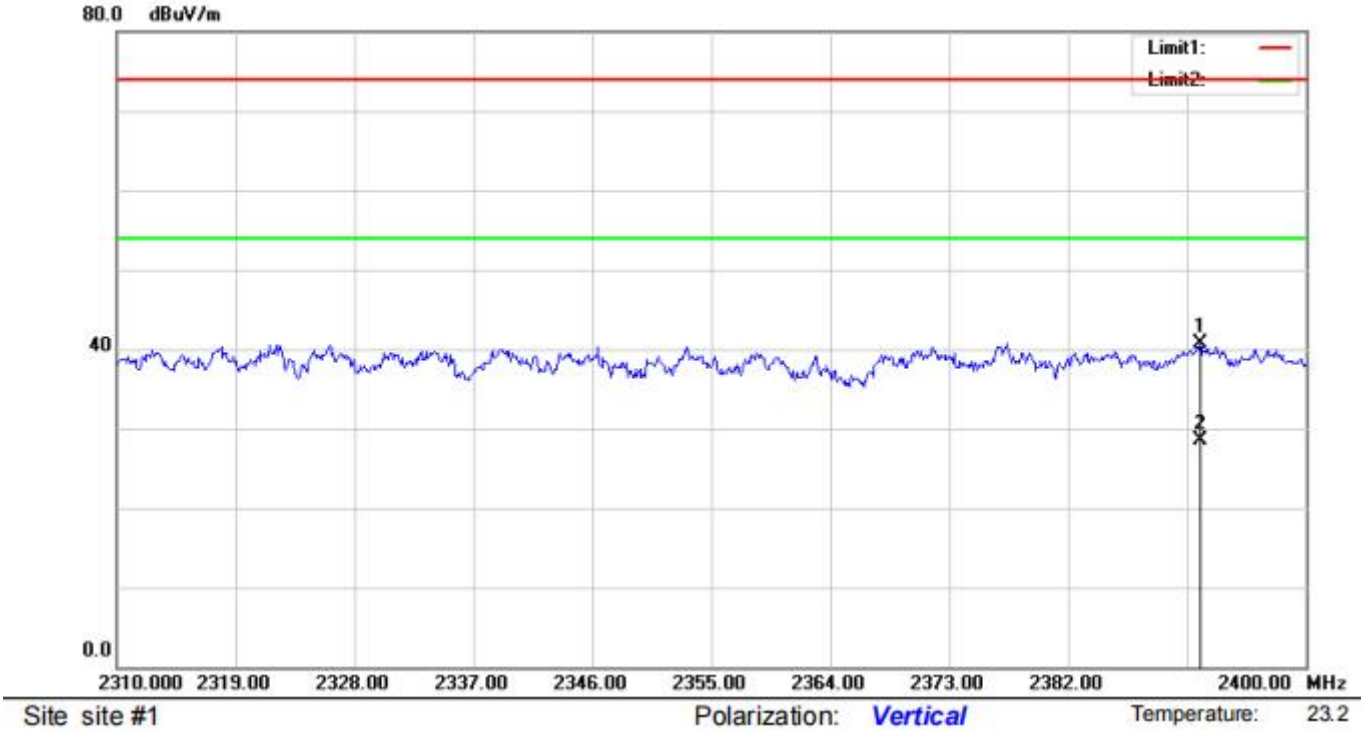

Test Model	Band Emissions High Test By: Ccyf	GFSK	H

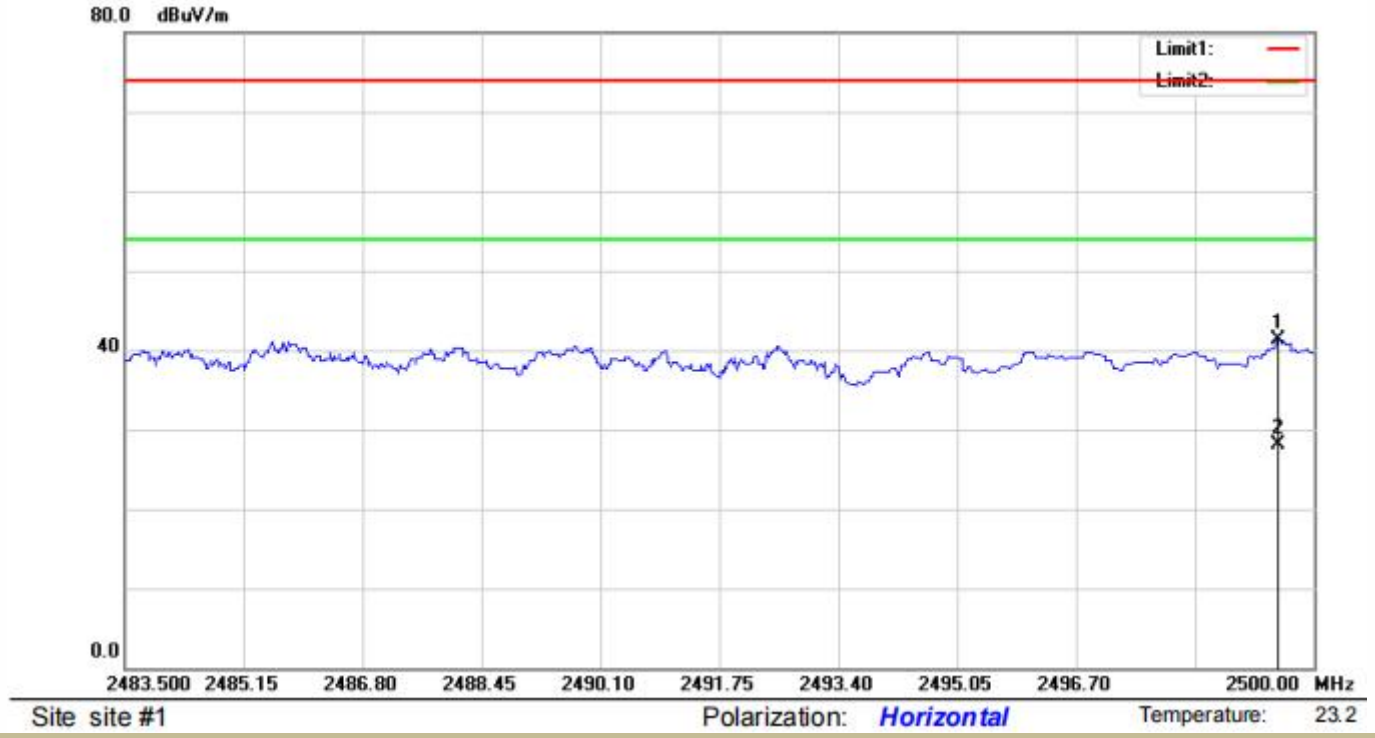

Test Model	Band Emissions High Test By: Ccyf	GFSK	V

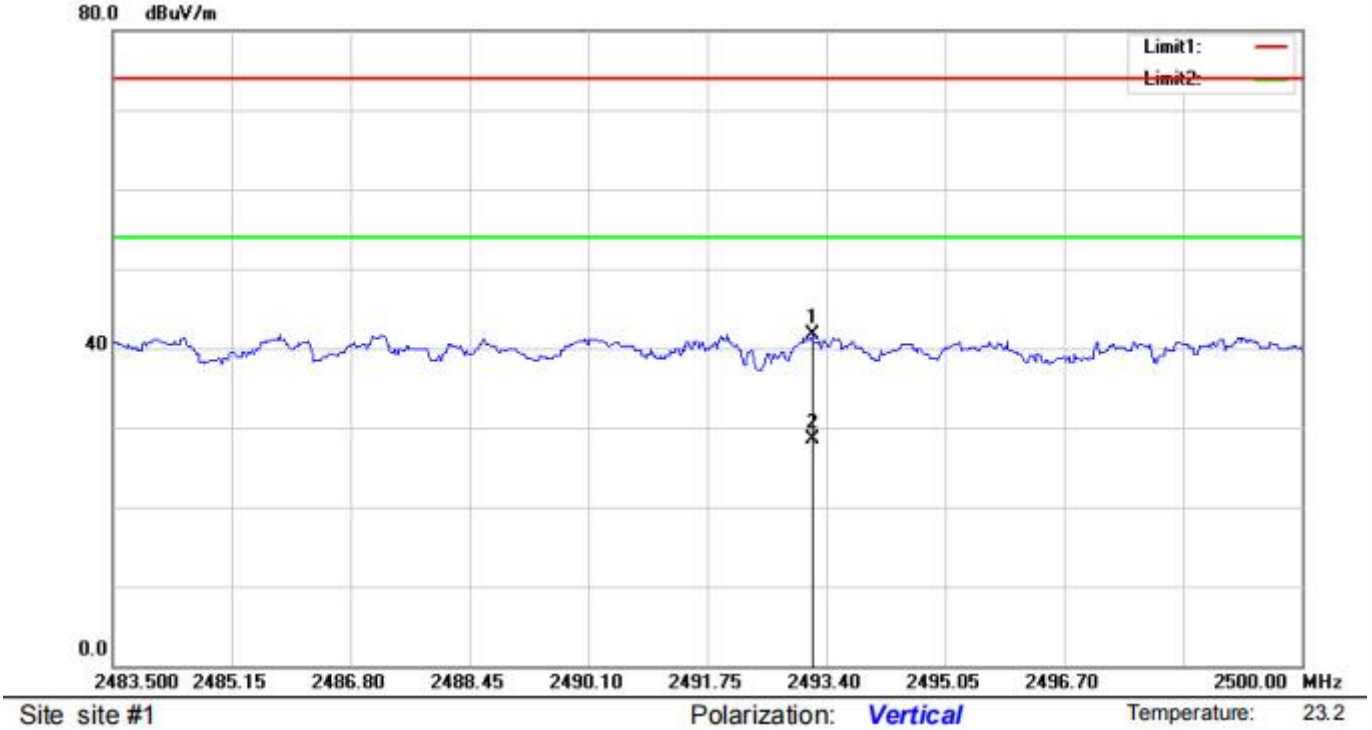

■ Spurious Emission Above 1GHz (1GHz to 25GHz)

Test mode: GFSK Frequency: Channel 1: 2440MHz

Freq. (MHz)	Ant.Pol. H/V	Emission Level(dBuV/m)		Limit 3m(dBuV/m)		Over(dB)	
		PK	AV	PK	AV	PK	AV
9563.54	V	56.41	42.97	74.00	54.00	-17.59	-11.03
10907.71	V	56.51	44.14	74.00	54.00	-17.49	-9.86
11882.00	V	55.66	43.00	74.00	54.00	-18.34	-11.00
8252.77	H	57.06	43.94	74.00	54.00	-16.94	-10.06
11999.35	H	57.27	43.32	74.00	54.00	-16.73	-10.68
15447.86	H	56.51	43.18	74.00	54.00	-17.49	-10.82

Note: (1) All Readings are Peak Value (VBW=3MHz) and Peak Value (VBW=10Hz).
(2) Emission Level= Reading Level+Correct Factor +Cable Loss.
(3) Correct Factor= Ant_F + Cab_L - Preamp
(4)Data of measurement within this frequency range shown " -- " in the table above means the reading of emissions are attenuated more than 20dB below the permissible limits or the field strength is too small to be measured.

Spurious Emission below 1GHz (30MHz to 1GHz)
All modes have been tested, and the worst result recorded was report as below:

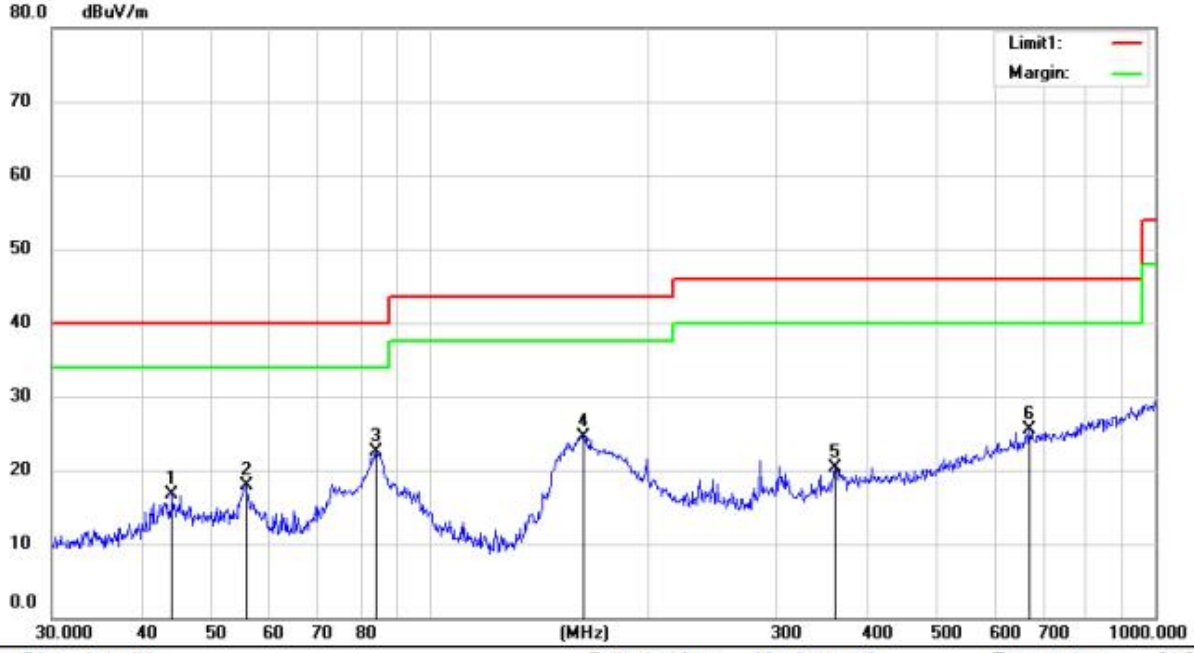

Site Chamber #1 Polarization: ***Horizontal*** Temperature: 24.3 C

No.	Mk.	Freq.	Reading Level	Ant. Factor	Pre Amp Gain	Cable loss	Measure-ment	Limit	Over		HI	Degree	
		MHz	dBuV	dB/m	dB	dB	dBuV/m	dBuV/m	dB	Detector	cm	deg.	Comment
1		43.9658	32.92	13.61	30.51	0.68	16.70	40.00	-23.30	QP			
2		55.6094	34.17	13.35	30.5	0.93	17.95	40.00	-22.05	QP			
3	*	84.1100	43.63	8.48	30.65	1.06	22.52	40.00	-17.48	QP			
4		162.6106	44.60	9.01	30.56	1.51	24.56	43.50	-18.94	QP			
5		361.7140	32.17	15.3	29.82	2.68	20.33	46.00	-25.67	QP			
6		670.4893	30.84	21.27	30.06	3.47	25.52	46.00	-20.48	QP			

*:Maximum data x:Over limit !:over margin Operator: Ccyf

Site Chamber #1 Polarization: *Vertical* Temperature: 24.3 C

No.	Mk.	Freq.	Reading Level	Ant. Factor	Pre Amp Gain	Cable loss	Measure-ment	Limit	Over		HI	Degree	
		MHz	dBuV	dB/m	dB	dB	dBuV/m	dBuV/m	dB	Detector	cm	deg.	Comment
1		43.8120	42.79	13.59	30.51	0.68	26.55	40.00	-13.45	QP			
2		75.1821	47.56	8.48	30.57	1.08	26.55	40.00	-13.45	QP			
3	*	83.2297	50.75	8.35	30.64	1.06	29.52	40.00	-10.48	QP			
4		160.9090	49.89	8.87	30.57	1.5	29.69	43.50	-13.81	QP			
5		234.1682	37.63	12.56	30.18	1.99	22.00	46.00	-24.00	QP			
6		672.8443	30.67	21.31	30.06	3.47	25.39	46.00	-20.61	QP			

*:Maximum data x:Over limit !:over margin Operator: Ccyf

Remark:
1. Measurement (dBμV/m) = Antenna Factor(dB) -Amp Factor(dB) +Cable Loss(dB) + Reading(dBμV/m)
2. Over (dB) = Measurement (dBμV/m) - Limit (dBμV/m)

7.4 CONDUCTED EMISSIONS TEST

7.4.1 Applicable Standard

According to FCC Part 15.207(a)

7.4.2 Conformance Limit

Conducted Emission Limit		
Frequency(MHz)	Quasi-peak	Average
0.15-0.5	66-56	56-46
0.5-5.0	56	46
5.0-30.0	60	50

Note: 1. The lower limit shall apply at the transition frequencies
2. The limit decreases in line with the logarithm of the frequency in the range of 0.15 to 0.50MHz.

7.4.3 Test Configuration

Test according to clause 7.3 conducted emission test setup

7.4.4 Test Procedure

The EUT was placed on a table which is 0.8m above ground plane.
Maximum procedure was performed on the highest emissions to ensure EUT compliance.
Repeat above procedures until all frequency measured were complete.

7.4.5 Test Results

Pass

The AC120V &240V voltage have been tested, and the worst result recorded was report as below:

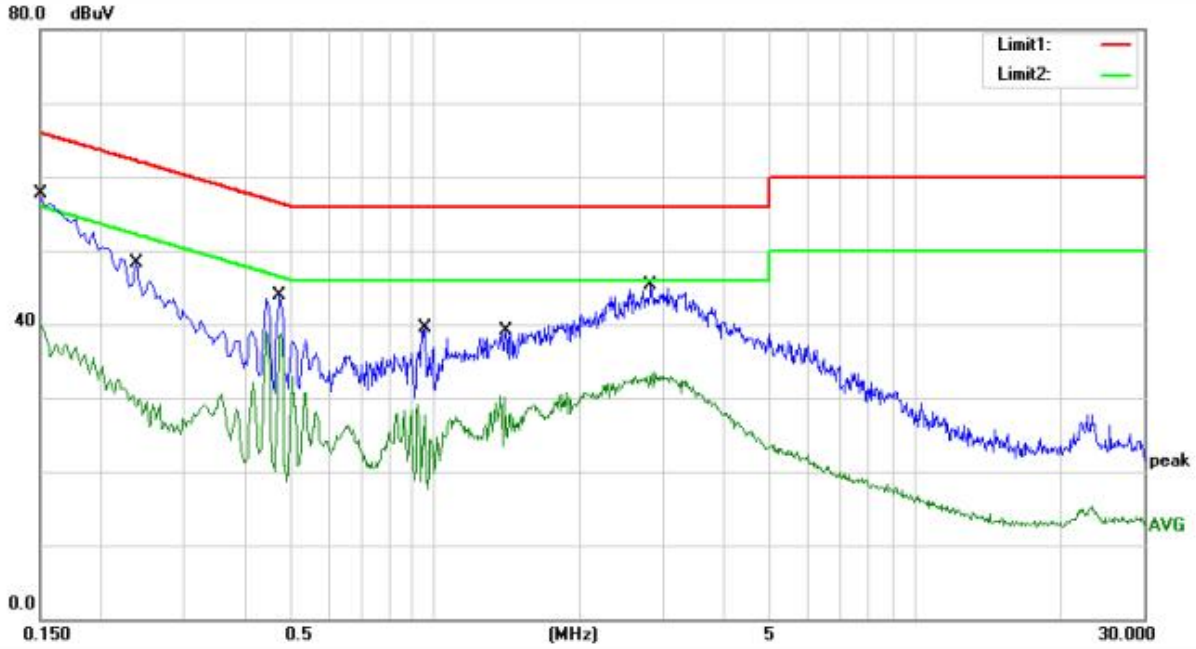

Site site #1 Phase: *L1* Temperature: 22.5

No.	Mk.	Freq.	Reading Level	Correct Factor	Measure-ment	Limit	Over		
		MHz	dBuV	dB	dBuV	dBuV	dB	Detector	Comment
1		0.1500	40.66	17.06	57.72	66.00	-8.28	QP	
2		0.1500	23.28	17.06	40.34	56.00	-15.66	AVG	
3		0.2380	31.19	17.06	48.25	62.17	-13.92	QP	
4		0.2380	12.78	17.06	29.84	52.17	-22.33	AVG	
5		0.4740	26.79	17.09	43.88	56.44	-12.56	QP	
6	*	0.4740	21.95	17.09	39.04	46.44	-7.40	AVG	
7		0.9540	22.53	17.03	39.56	56.00	-16.44	QP	
8		0.9540	10.61	17.03	27.64	46.00	-18.36	AVG	
9		1.4060	22.07	17.06	39.13	56.00	-16.87	QP	
10		1.4060	13.23	17.06	30.29	46.00	-15.71	AVG	
11		2.8100	28.31	17.04	45.35	56.00	-10.65	QP	
12		2.8100	16.41	17.04	33.45	46.00	-12.55	AVG	

*:Maximum data x:Over limit !:over margin Comment: Factor build in receiver. Operator: Jian

Remark:
1. Measurement (dBμV) = AMN Factor (dB) + Cable Loss (dB) + Reading (dBμV)
2. Over (dB) = Measurement (dBμV) - Limit (dBμV)

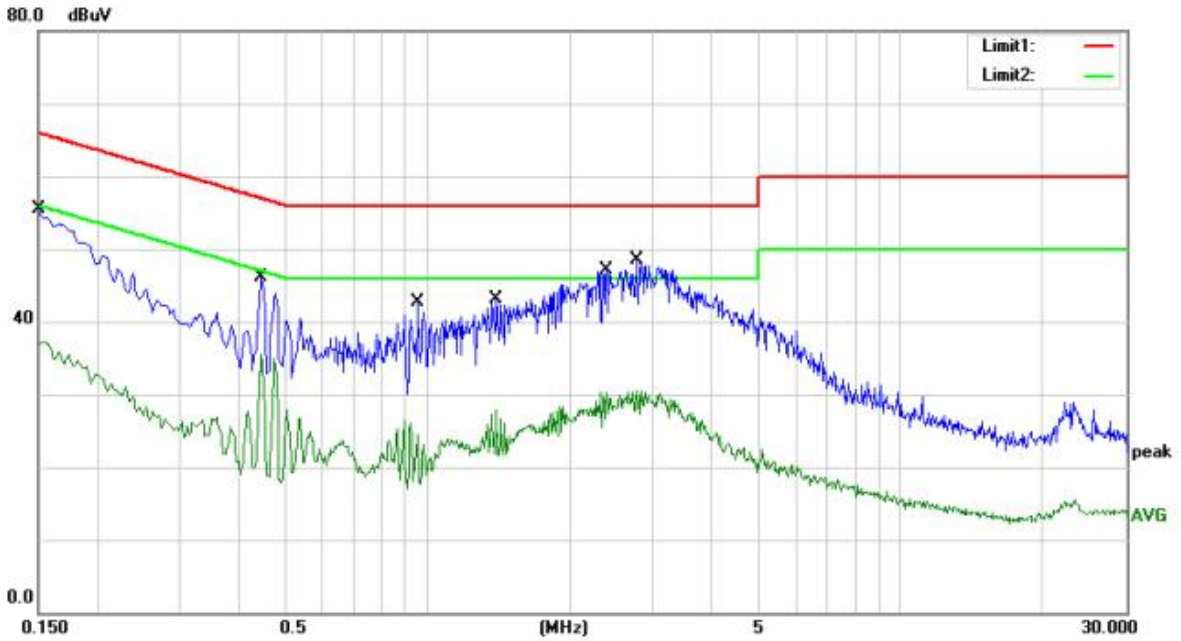

Site site #1 Phase: N Temperature: 22.5

No.	Mk.	Freq.	Reading Level	Correct Factor	Measure-ment	Limit	Over		
		MHz	dBuV	dB	dBuV	dBuV	dB	Detector	Comment
1		0.1500	38.50	17.06	55.56	66.00	-10.44	QP	
2		0.1500	20.24	17.06	37.30	56.00	-18.70	AVG	
3		0.4460	29.00	17.07	46.07	56.95	-10.88	QP	
4		0.4460	18.42	17.07	35.49	46.95	-11.46	AVG	
5		0.9540	25.58	17.03	42.61	56.00	-13.39	QP	
6		0.9540	9.01	17.03	26.04	46.00	-19.96	AVG	
7		1.3980	26.10	17.06	43.16	56.00	-12.84	QP	
8		1.3980	10.81	17.06	27.87	46.00	-18.13	AVG	
9		2.3860	29.97	17.08	47.05	56.00	-8.95	QP	
10		2.3860	13.24	17.08	30.32	46.00	-15.68	AVG	
11	*	2.7740	31.43	17.04	48.47	56.00	-7.53	QP	
12		2.7740	13.39	17.04	30.43	46.00	-15.57	AVG	

*:Maximum data x:Over limit !:over margin Comment: Factor build in receiver. Operator: Jian

Remark:
1. Measurement (dBμV) = AMN Factor (dB) + Cable Loss (dB) + Reading (dBμV)
2. Over (dB) = Measurement (dBμV) - Limit (dBμV)

7.5 ANTENNA APPLICATION

7.5.1 Antenna Requirement

Standard	Requirement
FCC CRF Part 15.203	An intentional radiator shall be designed to ensure that no antenna other than that furnished by the responsible party shall be used with the device. The use of a permanently attached antenna or of an antenna that uses a unique coupling to the intentional radiator shall be considered sufficient to comply with the provisions of this section. The manufacturer may design the unit so that a broken antenna can be replaced by the user, but the use of a standard antenna jack or electrical connector is prohibited. This requirement does not apply to carrier current devices or to devices operated under the provisions of §15.211, §15.213, §15.217, §15.219, or §15.221. Further, this requirement does not apply to intentional radiators that must be professionally installed, such as perimeter protection systems and some field disturbance sensors, or to other intentional radiators which, in accordance with §15.31(d), must be measured at the installation site. However, the installer shall be responsible for ensuring that the proper antenna is employed so that the limits in this part are not exceeded.
RSS-GEN Clause 6.8	An intentional radiator shall be designed to ensure that no antenna other than that furnished by the responsible party shall be used with the device. The use of a permanently attached antenna or of an antenna that uses a unique coupling to the intentional radiator shall be considered sufficient to comply with the provisions of this section. The manufacturer may design the unit so that a broken antenna can be replaced by the user, but the use of a standard antenna jack or electrical connector is prohibited. This requirement does not apply to carrier current devices or to devices operated under the provisions of RSS-GEN Clause 6.8. Further, this requirement does not apply to intentional radiators that must be professionally installed, such as perimeter protection systems and some field disturbance sensors, or to other intentional radiators which, in accordance with RSS-GEN Clause 6.8, must be measured at the installation site. However, the installer shall be responsible for ensuring that the proper antenna is employed so that the limits in this part are not exceeded.

7.5.2 Result

PASS.

- The EUT has 1 antennas: an Integrated antenna for 2.4G, antenna has a gain of 待提供 dBi ;

Note: ☒ Antenna use a permanently attached antenna which is not replaceable.
☐ Not using a standard antenna jack or electrical connector for antenna replacement
☐ The antenna has to be professionally installed (please provide method of installation)

which in accordance to section 15.203 and RSS-GEN Clause 6.8, please refer to the internal photos.

Detail of factor for radiated emission

Frequency(MHz)	Ant_F(dB)	Cab_L(dB)	Preamp(dB)	Correct Factor(dB)
0.009	20.6	0.03	\	20.63
0.15	20.7	0.1	\	20.8
1	20.9	0.15	\	21.05
10	20.1	0.28	\	20.38
30	18.8	0.45	\	19.25
30	11.7	0.62	27.9	-15.58
100	12.5	1.02	27.8	-14.28
300	12.9	1.91	27.5	-12.69
600	19.2	2.92	27	-4.88
800	21.1	3.54	26.6	-1.96
1000	22.3	4.17	26.2	0.27
1000	25.6	1.76	41.4	-14.04
3000	28.9	3.27	43.2	-11.03
5000	31.1	4.2	44.6	-9.3
8000	36.2	5.95	44.7	-2.55
10000	38.4	6.3	43.9	0.8
12000	38.5	7.14	42.3	3.34
15000	40.2	8.15	41.4	6.95
18000	45.4	9.02	41.3	13.12
18000	37.9	1.81	47.9	-8.19
21000	37.9	1.95	48.7	-8.85
25000	39.3	2.01	42.8	-1.49
28000	39.6	2.16	46.0	-4.24
31000	41.2	2.24	44.5	-1.06
34000	41.5	2.29	46.6	-2.81
37000	43.8	2.30	46.4	-0.3
40000	43.2	2.50	42.2	3.5

*** End of Report ***