Direct Thermal Printer

XP-410B Series

Thermal Barcode Printer

User's Manual

Please keep the user's manual properly for reference

Contents

Copyright statement 1
Cautions 1
I. Product 2
II. Receiving 3
2.1 Unpacking and checking accessories 3
2.2 Printer components 4
2.2.1 Front view 4
2.2.2 Rear view 4
III. Installation 5
3.1 Install the printer 5
3.2 Install the label 6
3.3 Install the stripping module – optional 7
3.4 Stripping mode – optional 8
3.5 Install the cutter – optional 9

IV. LED indicator and button functions 9
4.1 LED indicator 9
4.2 General button functions 10
4.3 Boot function 10
V. Diagnostic Tool 15
5.1 Enable the Diagnostic Tool program 15
5.2 Printer settings 16
5.3 Calibrate the paper sensor with the Diagnostic Tool 16
5.4 Set the Ethernet with the Diagnostic Tool (optional) 17

VI. Troubleshooting 19
6.1 Common problems 19

VII. Simple maintenance procedures of the printer 23

Update history 24

Copyright statement

The manual is provided to the purchaser for reference in use and operation of the purchased equipment, and shall not be used or copied for other purposes without express written permission. All other brand names, product names, or trademarks are the property of other individual owners. Due to continuous product improvement, the machine specifications, accessories, parts, designs and software contents described in the manual are for reference only, and subject to the product purchased. Changes may be made without prior notice.XP does its best to ensure that the contents of the manual are correct, but errors are still likely to occur. XP reserves the right to correct any such errors and declares that it shall not be liable for any consequences caused thereby.

Cautions

1. When opening the cover of the printer, keep fingers and other parts of your body away from the paper exit to avoid crushing injury.
2. If the button battery RTC contained in the main board is not replaced correctly, the main board cannot be used normally.
3. Please dispose of the used batteries according to the manufacturer's operation instructions.

I. Product

Thank you for purchasing our ***2054K*** series thermal barcode printer. This desktop printer will provide you with safe, reliable and efficient printing at a reasonable price. By using it, the volume labels can be printed in a wide range of texts or graphic formats. Meanwhile, its superior function and easy operation make it your best choice among the thermal barcode printers of the same level.

The ***2054K*** series printer provides thermal printing. The printing speed is adjustable from 2.0, 3.0, 4.0, 5.0 to 6.0 inches per second. It applies to a variety of printing materials, including paper rolls, paper slices and fan-fold labels. In addition, the printer has the built-in 1D and 2D barcodes that are commonly used, a TTF font and eight sets of English numeric fonts in different sizes, and supports printing in 4 different directions. And through the zoom function, the fonts can be enlarged. All these will enable you to improve the label printing efficiency significantly.

II. Receiving

This printer is specially packaged to protect against possible damage in transit. However, since the printer may still be subjected to unexpected damage during transportation, you are kindly required to check the packaging and all units carefully when receiving the printer. In case of obvious damage, please contact the sales dealer directly and indicate the severity of the damage. If necessary, you should keep the packaging materials for returning the printer.

2.1 Unpacking and checking accessories

Once you have received your barcode printer, place it on a clean, steady table and carefully remove the packaging materials. Check if the following items are included:

- One printer
- One disk
- Paper supply kit (1" core)
- One USB cable
- One power supply
- One power cord
- One copy of quick installation guide

Dealer's options:

- Peel-off module (factory optional)
- Ethernet interface (factory optional)
- Bluetooth interface(factory optional)
- RTC battery (factory optional)
- Cutter module (factory optional)

User’s options:

- External paper roll holder (O.D. 214 mm with 1" or 3" core)
- Bushing of paper roll shaft: 1.5", two

2.2 Printer components

2.2.1 Front view

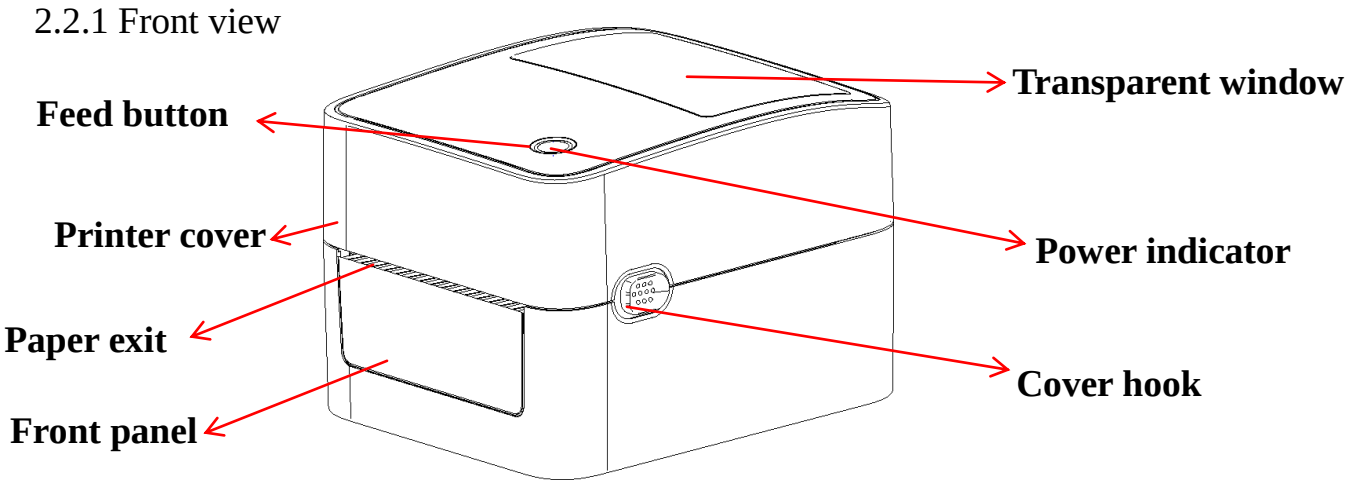

2.2.2 Rear view

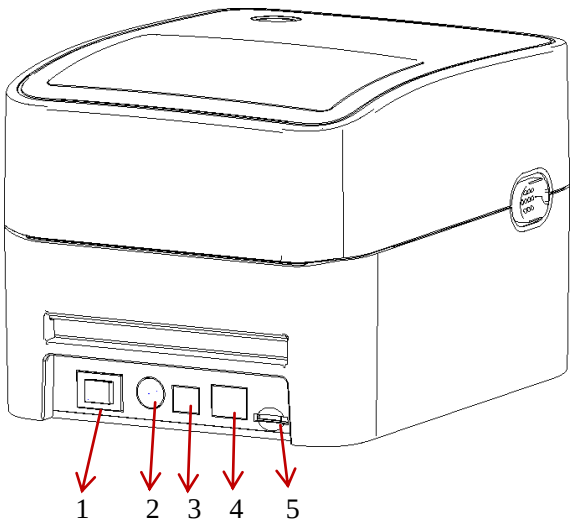

1. Power switch
2. Power socket
3. USB interface
4. Ethernet interface
5. SD card slot

Note: The transmission interfaces of the printer in the picture will vary depending on the model of machine you purchase. For the actual transmission interface, please refer to the catalog specifications.

III. Installation

3.1 Install the printer

1. Place the printer on a smooth and steady surface and make sure the power is off.
2. Plug one end of the parallel port cable, serial port cable or USB cable into the slot on the back of the printer, and connect the other end of the cable to the appropriate slot of your computer.
3. Plug the power cord into the power slot on the back of the printer and plug the other end into an AC socket.

Note: Make sure the printer power is switched off when you plug the power cord into the power slot on the back of the printer.

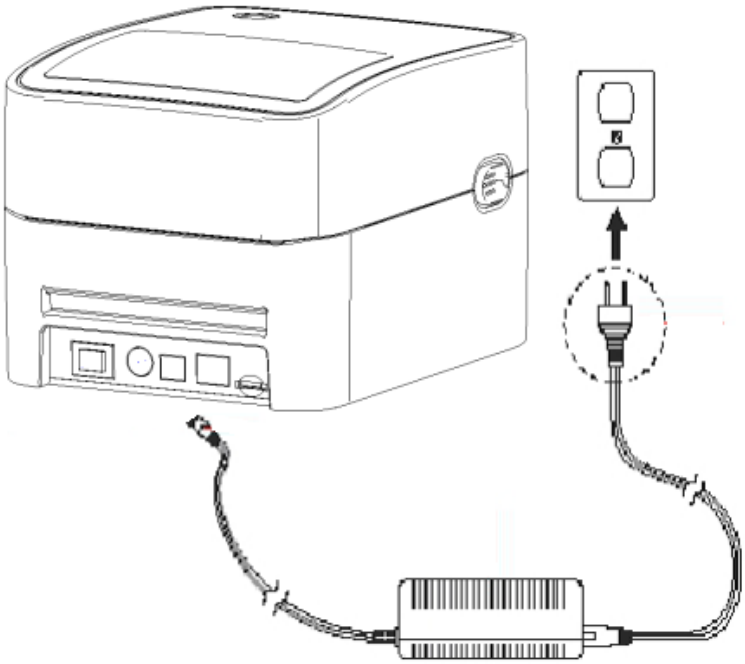

3.2 Install the label

1. Install the label into the paper supply kit. (Fixing plate & Paper roll shaft)

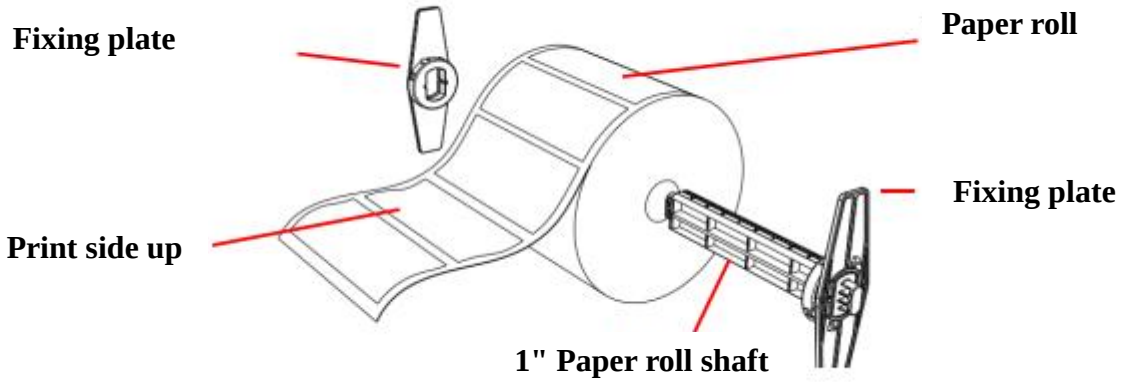

2. Push the printer cover hook forward with both hands to open the printer cover.
3. Place the label roll on the label roll holder. (Print side up)
4. Pass the label through the paper guide and pull the label over the rubber roller.

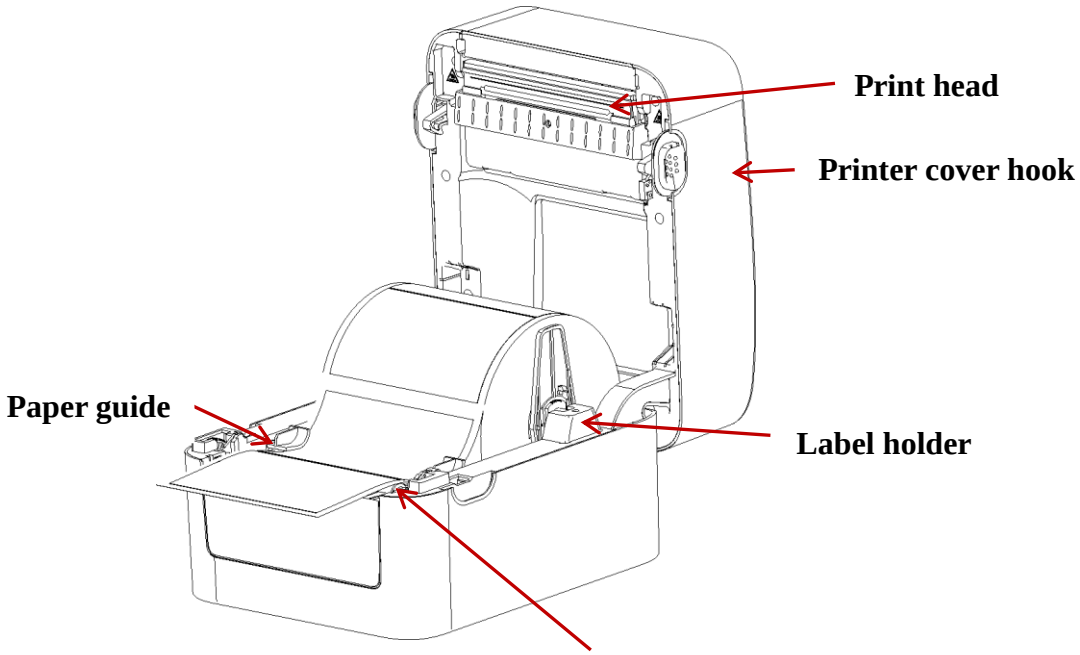

Rubber roller

5. Close the printer cover.

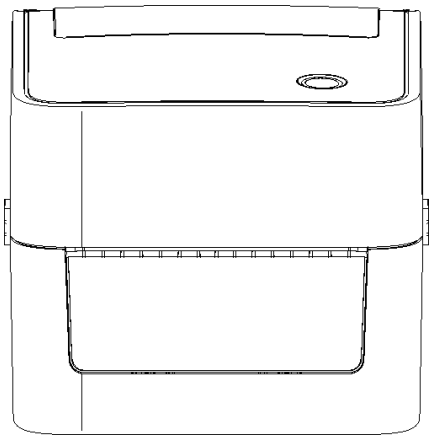

Note: To avoid poor printing quality, make sure the printer cover is closed tightly.

3.3 Install the peel-off module – optional

1. Push the cover hook forward with both hands to open the upper cover of the printer.
2. Dismantle the front panel, insert the peel off cable into the corresponding socket hole.
3. Install the peel-off module into the lower inner cover groove.
4. Gently push the stripping panel to lock the lower inner cover.
5. Reinstall the upper cover on the printer.

3.4 Install the label with peel-off module

1. Pull the paper stripper apart.

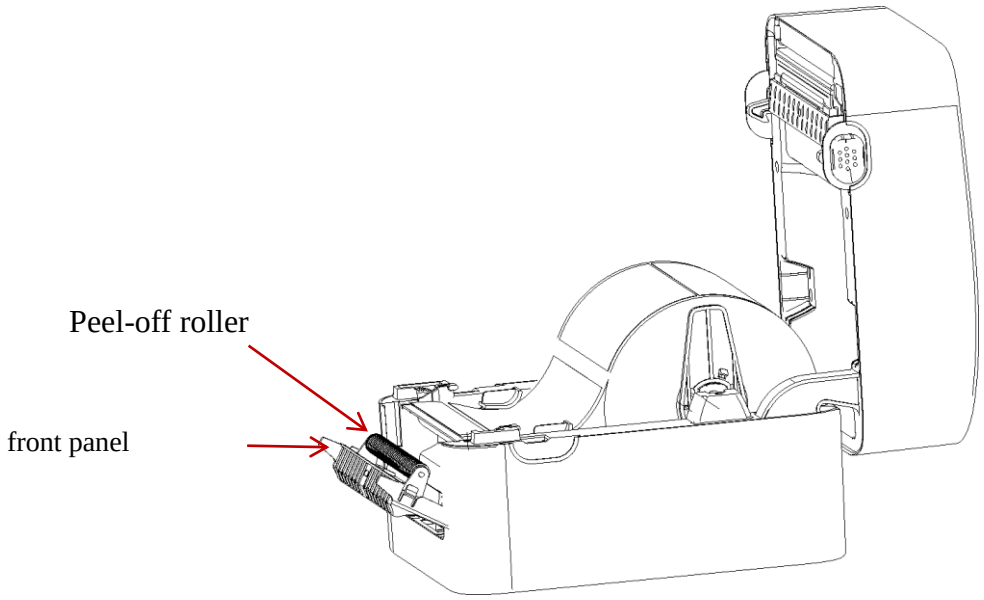

2. Pass the label through the paper guide, and pull the label over the rubber roller.

3. Pass the label through the backing paper exit under the roller (as shown by the blue dotted line below).

4. Adjust the center offset label guide with your finger to adapt to the edge on the back of the label.

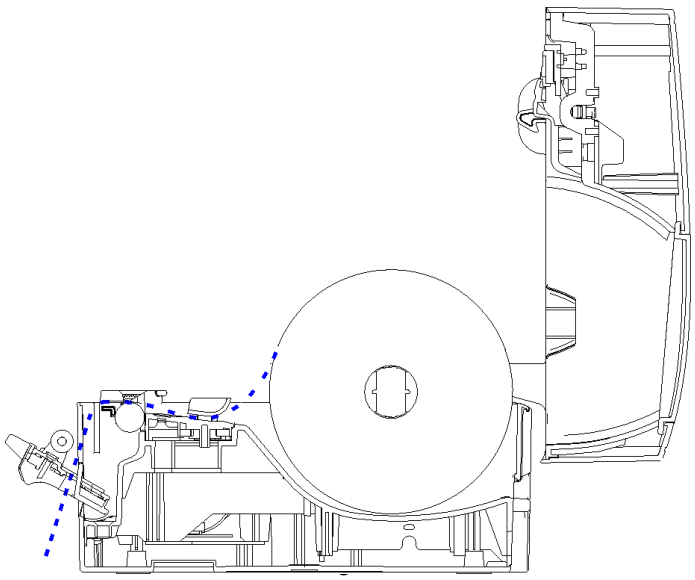

5. Close the front panel.
6. Put on the upper cover of the printer.

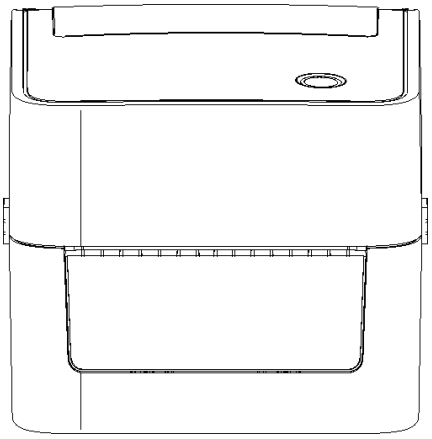

3.5 Install the cutter – optional

1. Push the cover release button forward with both hands to open the upper cover of the printer.
2. Insert the cutter cable into the corresponding socket hole.
3. Align the cutter module with the lower inner cover groove.
4. Gently push the cutter module downward to lock the lower inner cover.
5. Reinstall the upper cover on the printer.

IV. LED indicator and button functions

This printer has one button and one indicator that can display three colors. Pressing the button in conjunction with different colors or collaborating with the power switch will enable the printer to start multiple functions, such as feeding paper, pausing the printer, calibrating the label sensor, printing the self-test value, and initializing the printer. Details are described as follows:

4.1 LED indicator

LED indicator color	Description
Blue (fixed)	Power on, printer standby to print.
Blue (blinking)	The printer is downloading data or the printer is paused.
Purple	The printer is formatting the data.
Red (fixed)	Printer is in head opened or cutter error status.
Red (blinking)	Printing error occurs, e.g. out of paper, paper jam, or memory error, etc.

4.2 General button functions

1. Paper feeding

When the printer is standby (LED blue fixed), the installed paper will move forward one unit if feed button is pressed once.

2. Pausing of printing operation

While the printer is printing, Press the feed button will pause the operation. At this point, the power indicator blinks blue. Press the button again to resume the printing.

4.3 Boot function

This printer has four boot functions that can be used to set or test the printer's hardware.

Please follow the steps below to start the boot function:
1. Turn off the printer.
2. Turn on the printer while holding down the button.
3. Release the button with the light signal indicating the required function, as listed in the table below.

Boot function	Indicator color cycle mode:					
Indicator signal / Function	Purple	Blue	Red	Purple	Blue	Blue
			(Blink 5 times)	(Blink 5 times)	(Blink 5 times)	(Fixed blue)
1. Gap/black mark sensor detection			Release the button			
2. Gap/black mark sensor detection, printing self-test value and entering the debugging mode				Release the button		
3. Printer initialization (restore factory defaults)					Release the button	
4. Skip the **AUTO**. **BAS** program						Release the button

4.3.1 Gap/black mark sensor detection

This test aims to determine the sensitivity of the label paper sensor after the printer is turned on. When the user installs a new paper roll of a different specification or initializes the printer and restores it to the factory default value, the label paper gap sensor needs to be re-measured. The gap detection or black line mark calibration will be completed with your last set value as the reference value. The default value of this printer sensor is set to gap calibration.

Please follow the steps below to calibrate the ribbon and gap/black mark sensor:
1. Turn off the printer.
2. Turn on the printer while holding down the feed button.
3. When the indicator blinks red after the first purple, release the feed button.

■ Indicator color cycle mode:
Purple →Blue →Red (blink 5 times) →Purple (blink 5 times) →Blue (blink 5 times) →Blue (fixed)

Note:
Whether the printer volume label sensor detects the gap or the black mark depends on the **GAP** or **BLINE** command sent to the printer (with your last set value as the reference value, the default value of the printer sensor is set to gap calibration); for more information on **GAP** and **BLINE**

commands, please refer to the **TSPL2 programming manual**.

4.3.2 Gap/black mark sensor detection; printing self-test value and entering the debugging mode

This test aims to determine the sensitivity of the label paper sensor after the printer is turned on. When the user installs a new paper roll of a different specification or initializes the printer and restores it to the factory default value, the label paper gap sensor needs to be re-measured. The gap detection or black line mark calibration will be completed with your last set value as the reference value. The default value of this printer sensor is set to gap calibration.

Please follow the steps below to calibrate the label paper by the sensor:

1. Make sure that the label paper is properly installed
2. Turn off the printer
3. Turn on the printer while holding down the feed button
4. When the indicator blinks purple after the first purple, release the feed button

■ Indicator color cycle mode:
Purple →Blue →Red (blink 5 times) →Purple (blink 5 times) →Blue (blink 5 times) →Blue (fixed)

5. The sensor will calibrate the label paper and the printer will print out the self-test value, and finally enter the debugging mode and print out the value
6. Turn the machine off and on again to return the printer to the normal printing mode

Note:
Before carrying out the label paper sensor calibration, first confirm the type of label to be detected with **Diagnostic Tool** or **GAP/BLINE** command. For more information on **GAP** and **BLINE** commands, please refer to the **TSPL2 programming manual**.

Self-test

When the sensor calibration is completed, the printer prints out the self-test value. Before connecting the printer to your computer, you can use self-test to confirm that the printer is functioning properly. The self-test info can be used to check the printing quality of the print head and know the internal settings of the printer.

Internal settings of printer printed in the self-test mode	
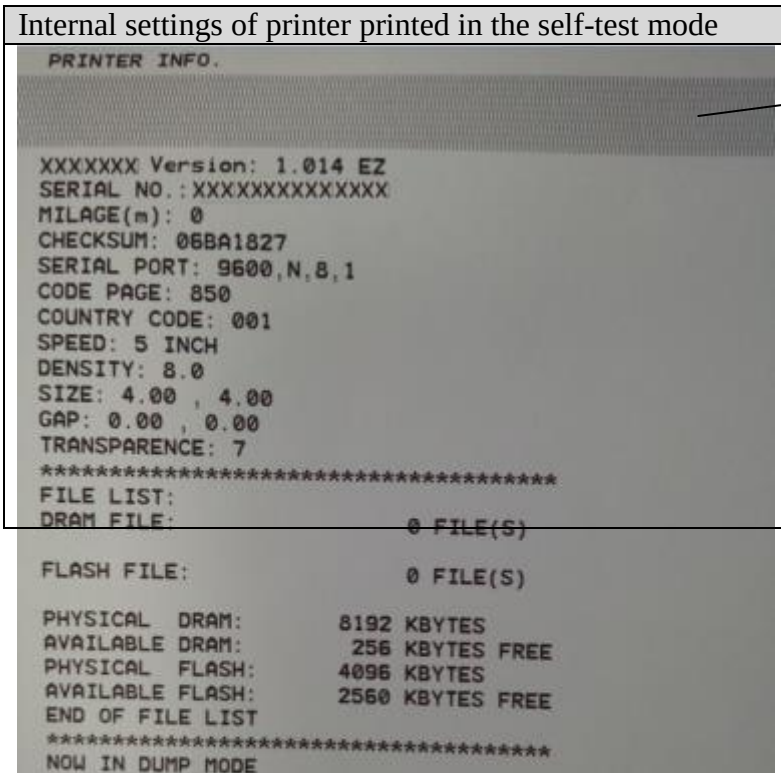	Print head check sample
	Model & firmware version
	Machine serial number
	Print head mileage
	Check code
	Serial port setting
	Character set
	Country code

	Printing speed
	Printing density
	Paper size (width, height)
	Black mark or gap size (vertical gap, offset)
	Sensor strength
	} Stored file information

■ Debug mode

After the self-test is printed, the printer system enters the debugging mode. In the debugging mode, all the volume labels will be printed as machine code. The ASCII strings on the left are the data received by the system. The data on the right are printed from the strings on the left, in hexadecimal values. This function is provided for users or engineers to debug programs. You only need to restart the printer to leave the debugging mode and return to the normal printing mode.

ASCII string

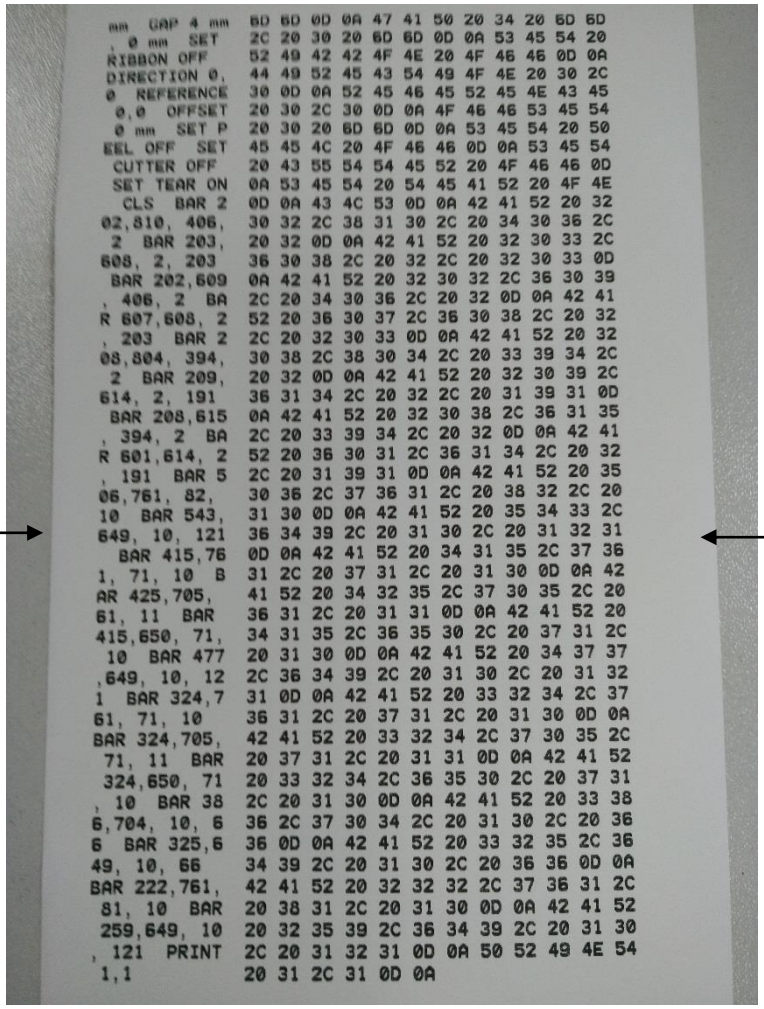

ASCII string	Hexadecimal
mm GAP 4 mm	6D 6D 0D 0A 47 41 50 20 34 20 6D 6D
, 0 mm SET	2C 20 30 20 6D 6D 0D 0A 53 45 54 20
RIBBON OFF	52 49 42 42 4F 4E 20 4F 46 46 0D 0A
DIRECTION 0,	44 49 52 45 43 54 49 4F 4E 20 30 2C
0 REFERENCE	30 0D 0A 52 45 46 45 52 45 4E 43 45
0,0 OFFSET	20 30 2C 30 0D 0A 4F 46 46 53 45 54
0 mm SET P	20 30 20 6D 6D 0D 0A 53 45 54 20 50
EEL OFF SET	45 45 4C 20 4F 46 46 0D 0A 53 45 54
CUTTER OFF	20 43 55 54 54 45 52 20 4F 46 46 0D
SET TEAR ON	0A 53 45 54 20 54 45 41 52 20 4F 4E
CLS BAR 2	0D 0A 43 4C 53 0D 0A 42 41 52 20 32
02,810, 406,	30 32 2C 38 31 30 2C 20 34 30 36 2C
2 BAR 203,	20 32 0D 0A 42 41 52 20 32 30 33 2C
608, 2, 203	36 30 38 2C 20 32 2C 20 32 30 33 0D
BAR 202,609	0A 42 41 52 20 32 30 32 2C 36 30 39
, 406, 2 BA	2C 20 34 30 36 2C 20 32 0D 0A 42 41
R 607,608, 2	52 20 36 30 37 2C 36 30 38 2C 20 32
, 203 BAR 2	2C 20 32 30 33 0D 0A 42 41 52 20 32
08,804, 394,	30 38 2C 38 30 34 2C 20 33 39 34 2C
2 BAR 209,	20 32 0D 0A 42 41 52 20 32 30 39 2C
614, 2, 191	36 31 34 2C 20 32 2C 20 31 39 31 0D
BAR 208,615	0A 42 41 52 20 32 30 38 2C 36 31 35
, 394, 2 BA	2C 20 33 39 34 2C 20 32 0D 0A 42 41
R 601,614, 2	52 20 36 30 31 2C 36 31 34 2C 20 32
, 191 BAR 5	2C 20 31 39 31 0D 0A 42 41 52 20 35
06,761, 82,	30 36 2C 37 36 31 2C 20 38 32 2C 20
10 BAR 543,	31 30 0D 0A 42 41 52 20 35 34 33 2C
649, 10, 121	36 34 39 2C 20 31 30 2C 20 31 32 31
BAR 415,76	0D 0A 42 41 52 20 34 31 35 2C 37 36
1, 71, 10 B	31 2C 20 37 31 2C 20 31 30 0D 0A 42
AR 425,705,	41 52 20 34 32 35 2C 37 30 35 2C 20
61, 11 BAR	36 31 2C 20 31 31 0D 0A 42 41 52 20
415,650, 71,	34 31 35 2C 36 35 30 2C 20 37 31 2C
10 BAR 477	20 31 30 0D 0A 42 41 52 20 34 37 37
,649, 10, 12	2C 36 34 39 2C 20 31 30 2C 20 31 32
1 BAR 324,7	31 0D 0A 42 41 52 20 33 32 34 2C 37
61, 71, 10	36 31 2C 20 37 31 2C 20 31 30 0D 0A
BAR 324,705,	42 41 52 20 33 32 34 2C 37 30 35 2C
71, 11 BAR	20 37 31 2C 20 31 31 0D 0A 42 41 52
324,650, 71	20 33 32 34 2C 36 35 30 2C 20 37 31
, 10 BAR 38	2C 20 31 30 0D 0A 42 41 52 20 33 38
6,704, 10, 6	36 2C 37 30 34 2C 20 31 30 2C 20 36
6 BAR 325,6	36 0D 0A 42 41 52 20 33 32 35 2C 36
49, 10, 66	34 39 2C 20 31 30 2C 20 36 36 0D 0A
BAR 222,761,	42 41 52 20 32 32 32 2C 37 36 31 2C
81, 10 BAR	20 38 31 2C 20 31 30 0D 0A 42 41 52
259,649, 10	20 32 35 39 2C 36 34 39 2C 20 31 30
, 121 PRINT	2C 20 31 32 31 0D 0A 50 52 49 4E 54
1,1	20 31 2C 31 0D 0A

Hexadecimal value data corresponding to the ASCII string listed on the left

Note:

1. Label paper of **4"** wide is required to print all the debugging mode data.
2. Restart the printer to leave the debugging mode and return to the normal printing mode, or press the **FEED** button to return to the standby state.

4.3.3 Printer initialization

The printer initialization function is to clear the downloaded files in the memory (DRAM) and restore the print parameters to the factory default settings.

Please follow the steps below to complete the initialization:

1. Turn off the power.
2. Hold down the feed button and turn on the power. At this point, the power indicator color will cycle as follows:

- Indicator color cycle mode:
  Purple →Blue →Red (blink 5 times) →Purple (blink 5 times) →Blue (blink 5 times) →Blue (fixed)

3. Release the feed button when the power indicator is blinking blue. At this point, the printer will be reset, and then the power indicator will blink purple once, and finally the power indicator will be blue in ready state.

After initialization, the printer configuration is restored to its default values as follows:

Parameters	Defaults
Speed	152.0 mm/sec (6 ips) (203DPI)
Density	8
Label width	4” (100 mm)
Label height	7.9” (180 mm)
Sensor type	Gap sensor
Gap setting	0.16” (4.0 mm)
Printing direction	0
Reference point	0,0 (upper left corner)
Offset	0
Tear-off mode	On
Peel-off mode	Off
Characters	850
Country code	001
Clear flash	No
IP address	DHCP

4.3.4 Skip the AUTO.BAS program

The TSPL2 command language allows the user to load an auto-execute file (AUTO.BAS) into the flash memory. When the printer is turned on, it will be automatically executed according to the file loaded by the user. When you want to skip the AUTO.BAS after power-on, you can use this boot function to ignore this auto-execute file.

Please follow the steps below to skip AUTO.BAS:

1. Turn off the power.
2. Hold down the feed button and turn on the power. At this point, the power indicator color will cycle as follows:

- Indicator color cycle mode:
  Purple →Blue →Red (blink 5 times) →Purple (blink 5 times) →Blue (blink 5 times)→Blue (fixed)

3. Release the FEED button when the indicator is fixed blue.
4. The printer will skip the AUTO.BAS program.

V. Diagnostic Tool

Diagnostic Tool is an easy-to-use window-type utility program that allows you to check the current status and settings of the printer, download graphic files, programs, font files, etc., and complete firmware updates according to the actual need. Moreover, it supports creation and download of dot-matrix fonts, transmission of commands or files and so on. By using it, you can complete the printer setup, check the printer status and troubleshoot the printer usage problems more easily.

5.1 Enable the Diagnostic Tool program

1. Move the mouse cursor to the Diagnostic Tool image Diagnostic Tool.exe and double click the left mouse button.
2. After it is started, the main screen shows 4 management pages (printer settings, file management, communication tools, system printer settings).

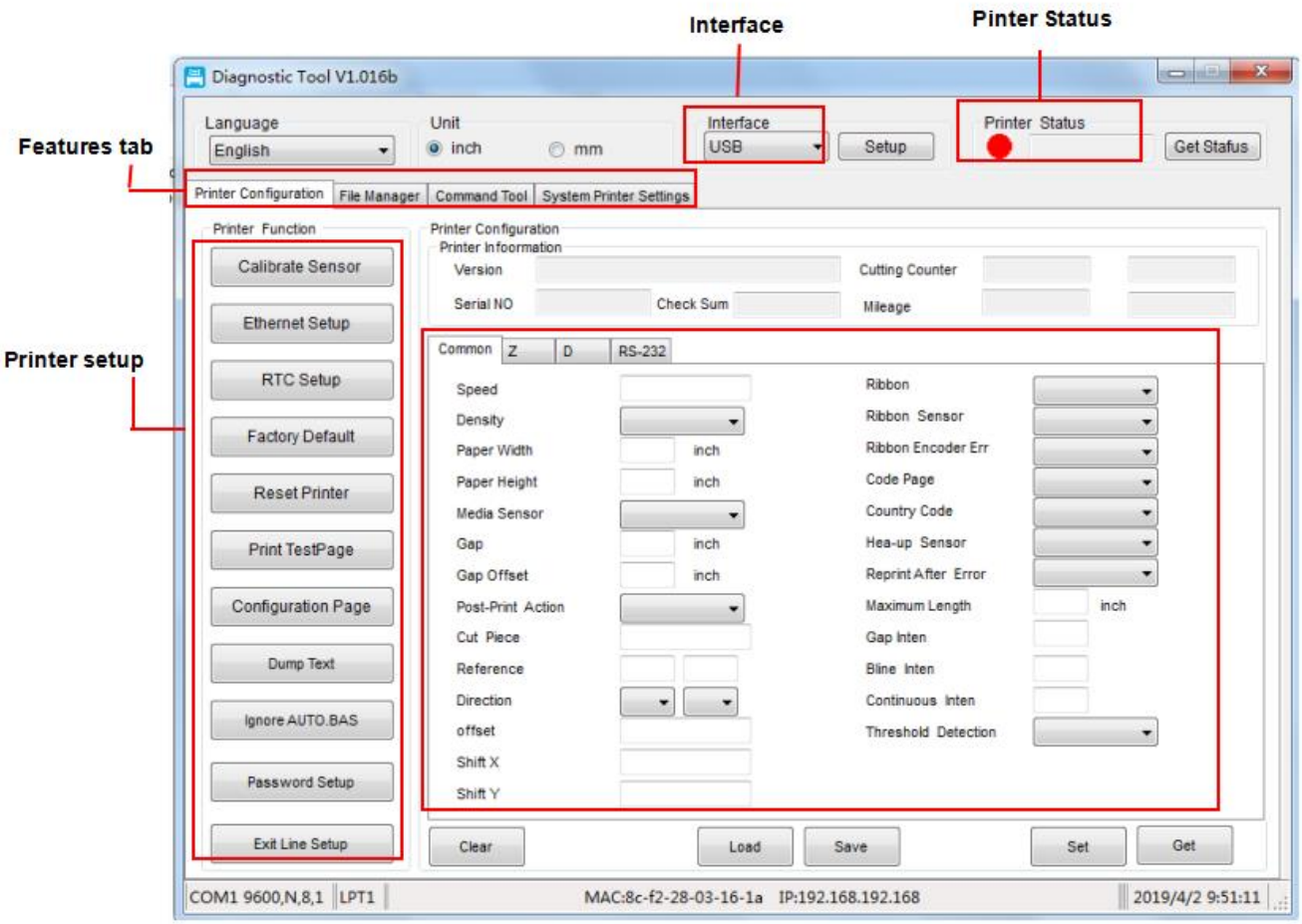

5.2 Printer settings

1. Select the connection interface between your computer and the printer.

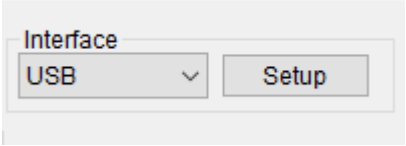 The default communication interface of the Diagnostic Tool program is USB, so if the computer is connected through USB cable for transmission, no changes need to be made to the settings.	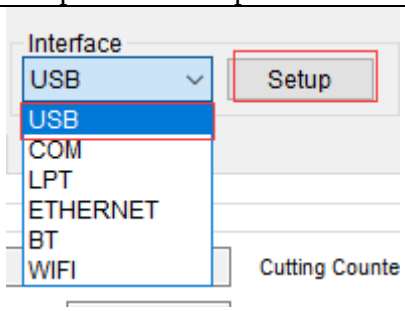

2. Click on a function you intend to set in the "Printer Settings".
3. The printer functions in the Printer Settings management page are described as below:

	Description
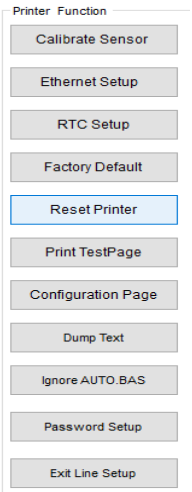	Sensor Calibration
	Set Ethernet Network
	Set Printer RTC Time Parameters
	Restore Factory Defaults and Reboot
	Restart the Printer
	Print Test Page
	Print Self-test Page
	Enter Printer Debugging Mode
	Ignore the AUTO.BAS File
	Set the Diagnostic Tool Password

5.3 Calibrate the paper sensor with the Diagnostic Tool

5.3.1 Automatic correction

1. Make sure that the paper is installed correctly and the print head is closed.
2. Turn on the printer.
3. Start the Diagnostic Tool and set the transmission interface (the default is USB).

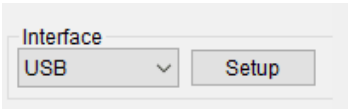 The default communication interface of the Diagnostic Tool program is USB, so if the computer is connected through USB cable for transmission, no changes need to be made to the settings.	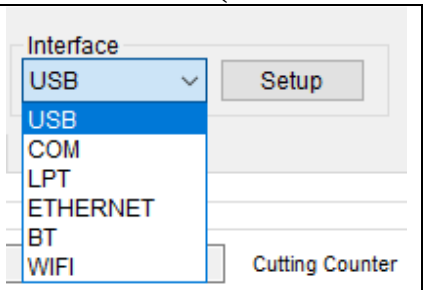

4. Click on "Sensor Calibration".
5. Select the paper type and click on "Calibration". The printer will automatically feed the paper to calibrate the sensor.

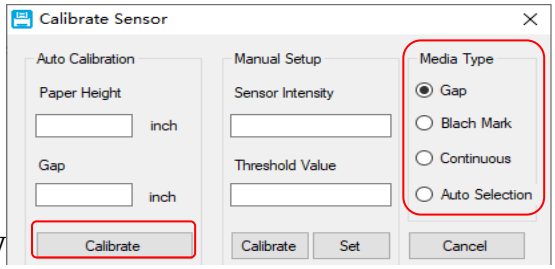

5.4 Set the Ethernet w

The Diagnostic Tool program is attached to the Utilities folder in the CD provided with the printer. The user can use the Diagnostic Tool to set up via USB, RS-232 or Ethernet interface through Ethernet.

5.4.1 Setting via USB interface

1. Connect USB cable to the printer and the computer.
2. Turn on the power of the printer.
3. Double click the left button of the mouse on Diagnostic Tool.exe icon to start the Diagnostic Tool program of the printer.
4. The default communication interface of the Diagnostic Tool program is USB, so if the computer is connected through USB cable for transmission, no changes need to be made to the settings.

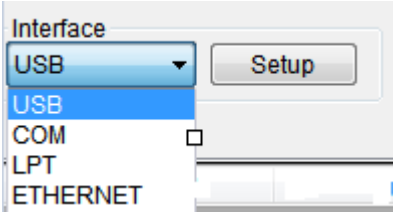

5. In the printer functions page, click the “Network Setting” button in the printer functions to set IP, subnet mask, and gateway.

5.4.2 Setting via Ethernet interface

1. Connect the computer and the printer to the local area network.
2. Turn on the power of the printer.
3. Double click the left button of the mouse on Diagnostic Tool.exe icon to start the Diagnostic Tool
4. Select “ETHERNET” at the communication interface and press the “Setup” button to set IP, subnet mask, and gateway.

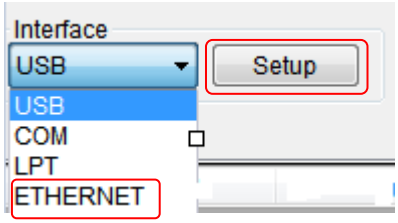

5. Press “Discover” button to find printers available on the local area network.
6. Select the printer to be set on the left side, and its IP address will appear in the “Name/IP address of printer” on the right side.
7. Press “Change IP” button to set the assigned IP address or automatically obtain the IP location (DHCP).

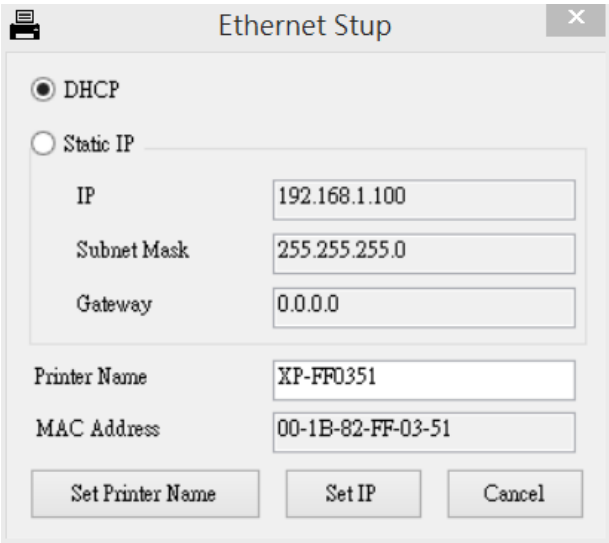

The factory default value set by such IP is “Automatically obtain the IP location”. If you need to change your IP location, please select “Designate the IP location” and enter the IP, subnet mask and gateway to be set, and then press the “Set IP” button to set, and the user can also change the name of the printer by pressing the “Set printer name” button after entering the intended name in the printer name column.

Note: After pressing the “Set printer name” or “Set IP” button, the printer will reset its value.

8. Press the “Exit” button to leave this TCP/IP Setup screen and return to the main screen of the Diagnostic Tool program.

“Factory default value” button
Press this button to change the setting of IP back to the automatic obtaining of IP location (DHCP) in the factory default setting and reset of the printer name.

“Webpage setting” button
In addition to the setting with the Diagnostic Tool, the user can also set, check or update the firmware of the printer by opening the webpage via IE or Firefox. By use of this function, the user may set the printer remotely via the local area network.

VI. Troubleshooting

6.1 Common problems

The table below shows the common problems the printer operators normally meet and the solutions to them; if you have tried the troubleshooting in the ways we suggest but the printer is still not working properly, please contact the customer service of the vendor for more assistance.

- The power indicator is off.	* The AC socket plug and the power supply plug are not properly connected to the socket of the printer * The printer power is not switched on	* Check the power connector, and make sure that the AC socket and the power supply plug are properly connected to the printer * Turn on the power switch
- The Diagnostic Tool displays "Head open"	* The cover of printer is not closed	* Close the cover of printer.
- The Diagnostic Tool displays "Paper end"	* The label paper is used up * The label installation path is incorrect * The sensor setting is incorrect.	* Install new label paper * Refer to the steps of label installation and reinstall it * Calibrate the label.
- The Diagnostic Tool displays "Paper Jam"	* The sensor setting is incorrect. * The label paper size setting is incorrect * There may be volume label paper stuck inside the printer mechanism	* Calibrate the volume label sensor * Set the correct label size * Clean the inside of the mechanism

Problem	Possible cause	Solution
- Unable to print	* The pin of the serial cable in the transmission line slot of the machine is not of 1 to 1 type	* Reconnect the transmission line * If you are using a serial port cable, - Replace the serial port cable. The pin of the cable must be of 1 to 1 type - Make sure that the transmission rate of the printer is set to 9600, n,8,1 * If you are using an Ethernet cable, - Make sure that the Ethernet RJ-45 blue/purple light is ON - Make sure that it is the purple light that blinks when transmitting data via the Ethernet RJ-45 transmission line - Make sure that the printer gets an IP address when it is in the DHCP mode - Make sure that the IP address setting is correct when it uses a fixed IP address - Wait a few seconds for the printer to contact the server and then check the IP address again * Replace it with a new transmission line * Clean the print head * The printing density setting for the printer is incorrect * The connection line of the print head is not well connected. Please turn off the printer and reconnect the print head cable * Make sure that the stepper motor cable is connected correctly * Make sure that the PRINT program has PRINT commands at the end of the file, and CRLF is at the end of each line of the commands
- The memory space is full (FLASH/ DRAM)	*The FLASH/DRAM memory space is full	* Clear unnecessary files inside FLASH/DRAM. * The DRAM can store up to 256 files * User can store up to 256KB in DRAM * The FLASH can store up to 256 files * The maximum a user can store in FLASH is 2560KB

Problem	Possible cause	Solution
- The microSD memory card is not available	* The microSD memory card is damaged * The microSD memory card is not inserted correctly * The microSD card is from unverified manufacturer	* Use a microSD memory card with supporting capacity * Re-insert the microSD memory card
- Poor printing quality	* There is dust or adhesive buildup on the print head * The printing density is not set properly * The print head is damaged * The print head pressure setting is inappropriate	* Reinstall the consumables * Clean the print head * Clean the rubber roller * Adjust the printing density and printing speed of the printer * Print out the self-test value to check if the print head is damaged. If yes, replace it * Adjust the print head pressure adjusting knob - If it is too light on the left of the printed label, adjust and increase the value of the pressure adjusting knob on the left side. If the value is already "5", but it is still too light, adjust the value of the pressure adjusting knob back to "1" and then adjust the Z-axis adjuster to find the best pressure setting - If it is too light on the right of the printed label, adjust and increase the value of the pressure adjusting knob on the right side to improve the printing quality * If the thickness of the label exceeds 0.22 mm, the printing quality may not be good enough. Please increase the print head pressure first * Make sure that the print head holder is fully closed
- Paper skip occurs while printing	* The label size setting is incorrect or incomplete * The label has been changed without recalibrating the sensor * The label sensor is covered by dust, causing incorrect detection	* Make sure that the label size setting is correct * Recalibrate the label sensor * Remove dust from the sensor with an air brush

Problem	Possible cause	Solution
- The print position is not correct when printing small volume labels	* The label sensor setting is incorrect * The label size setting is incorrect * The vertical offset setting of the volume label style in the printer driver is incorrect	* Recalibrate the label sensor * Set the correct volume label size and volume label gap size * If the BarTender software is used, set the vertical offset in the printer driver 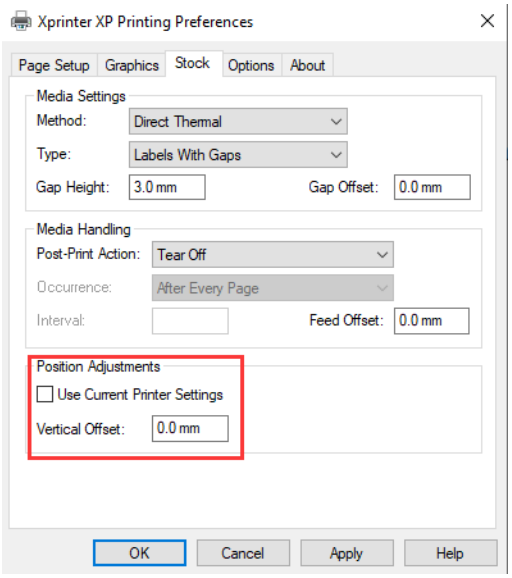
- Print missing on both left and right sides	* The label size setting is incorrect	* Set the correct label size
- The RTC time is not correct after restarting the printer	* The battery is dead	* Check the battery on the main board
- Wrinkle problem	* The print head pressure is uneven * The label paper is installed incorrectly * The printing density is incorrect * The label paper feeding is incorrect	* For uneven print head pressure, refer to the next section for adjustment * Set the appropriate label printing density * Use the label width adjuster to adapt it to the label width
- Gray lines appear on black mark paper	* There is dirt on the print head * There is dirt on the rubber roller	* Clean the print head * Clean the rubber roller
- Unstable printing	* The printer is in the Hex Dump mode * The serial cable (RS-232) setting is incorrect	* Turn the printer off and on again to jump out of the Dump mode * Reset RS-232

VII. Simple maintenance procedures of the printer

The simple maintenance procedures aim to ensure the printing quality and extend the life of the printer. Below are some of our recommended maintenance procedures.

1. Clean and maintain your printer by using the tools listed below:

- Cotton swab
- Cotton cloth
- Vacuum cleaner or air brush
- Medical alcohol

2. Cleaning steps:

Item	Steps	Recommended frequency
Print head	1. Turn off the printer 2. Allow the print head to cool for at least one minute 3. Wipe the print head surface with a cotton swab dipped in medical alcohol	When installing a new roll of label paper
	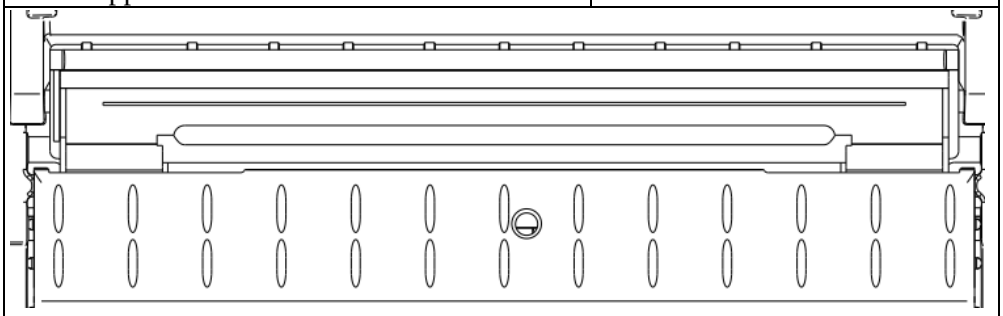	
Rubber roller	1. Turn off the printer 2. While rotating the rubber roller, carefully wipe it with a cotton cloth or cotton swab dipped in medical alcohol	When installing a new roll of label paper
Paper tearing-off piece Paper stripping piece	Wipe it with a cotton cloth dipped in medical alcohol	When needed
Sensor	Remove dust from the sensor with an air brush or vacuum cleaner.	Monthly
Outside of the machine	Wipe it with a wet cotton cloth	When needed
Inside of the machine	Remove dust from inside of the machine with an air brush or vacuum cleaner	When needed

Note:

- Do not touch the print head directly by hand. If your hand touches it accidentally, wipe it with a cotton swab dipped in medical alcohol
- Use medical alcohol. Do not use industrial alcohol, which may damage the print head
- If your printer displays error messages frequently, clean the sensor of the printer regularly
- The equipment can be used safely in tropical climates
- This is a Class A product that may cause radio interference in a living environment. In such case, user may need to take practical measures accordingly

FCC warning:

Any Changes or modifications not expressly approved by the party responsible for compliance could void the user's authority to operate the equipment.

Note: This device complies with Part 15 of the FCC Rules. Operation is subject to the following two conditions:
(1) This device may not cause harmful interference, and
(2) this device must accept any interference received, including interference that may cause undesired operation.

These limits are designed to provide reasonable protection against harmful interference in a residential installation. This equipment generates uses and can radiate radio frequency energy and, if not installed and used in accordance with the instructions, may cause harmful interference to radio communications. However, there is no guarantee that interference will not occur in a particular installation. If this equipment does cause harmful interference to radio or television reception, which can be determined by turning the equipment off and on, the user is encouraged to try to correct the interference by one or more of the following measures:
-Reorient or relocate the receiving antenna.
-Increase the separation between the equipment and receiver.
-Connect the equipment into an outlet on a circuit different from that to which the receiver is connected.
-Consult the dealer or an experienced radio/TV technician for help.

This equipment complies with FCC radiation exposure limits set forth for an uncontrolled environment. This equipment should be installed and operated with minimum distance 20cm between the radiator & your body.

- English:
This device complies with Innovation, Science and Economic Development Canada licence-exempt RSS standard(s).
Operation is subject to the following two conditions: (1) This device may not cause interference, and (2) This device must accept any interference, including interference that may cause undesired operation of the device.

The device has been evaluated to meet general RF exposure requirement.
The device can be used in portable exposure condition without restriction.

- French:
Le présentappareilestconforme aux CNR d'Avis sur l'innovation,la science etle développement économique applicables aux appareils radio exempts de licence. L'exploitationestautorisée aux deux conditions suivantes:
(1) l'appareil ne doit pas produire de brouillage, et
(2) l'utilisateur de l'appareildoit accepter tout brouillageradio électriquesubi, même si le brouillageest susceptible d'encompromettre le fonctionnement.

le dispositif a été évalué à satisfaire l'exigence générale de l'exposition aux rf.
l'appareil peut être utilisé dans des conditions d'exposition portatif sans restriction.

Update history

Date	Content	Editor
August 12, 2019	First issue	Hu Xiang