EXTRAVIS

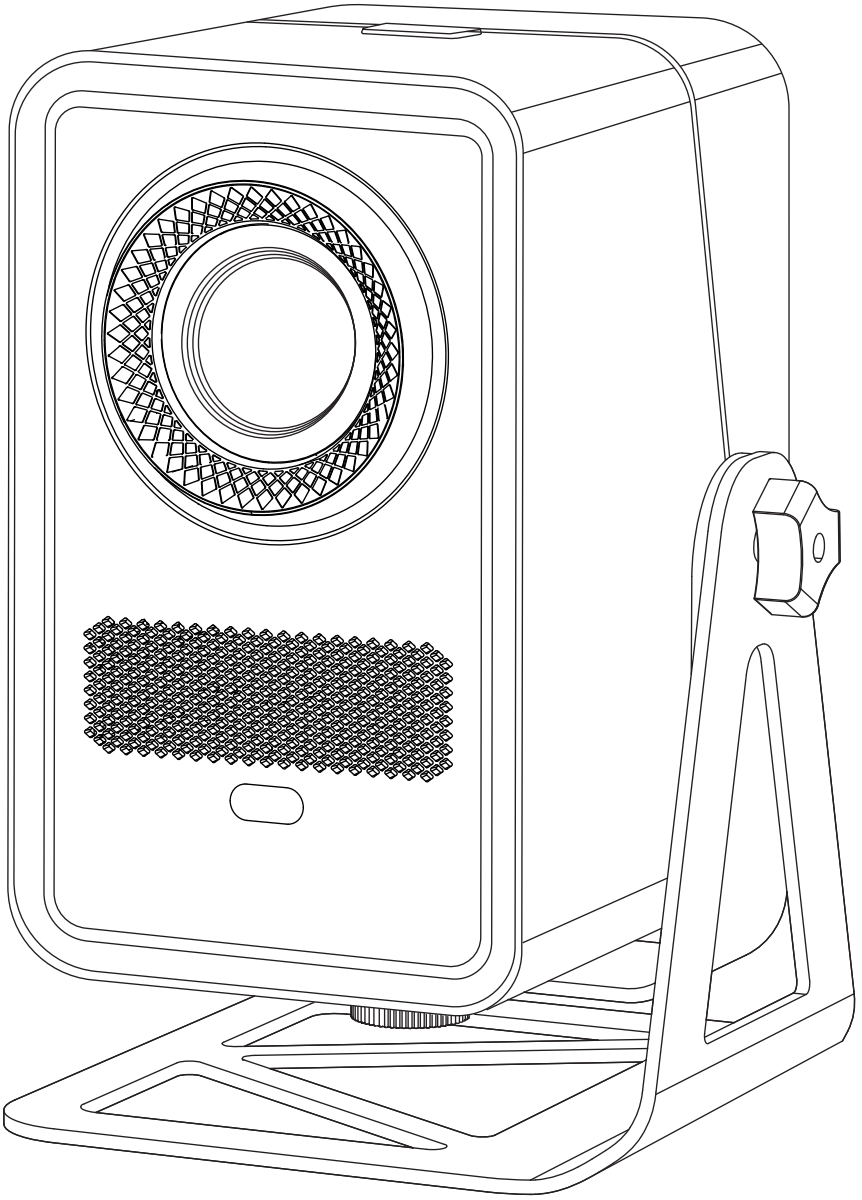

Y5 Instruction Manual

Please read the instruction before using and keep it for fulure reference.

- Safety Warning
- Appearance
- Remote Control
- System Interface
- Common Troubleshooting

Safety Warning

- To avoid dangerous or illegal operations,please read the following precautions carefully before using this device.
- To provide the device with a stable power supply,select the power supply line that conforms to the national electricity standard and the power sockets for which protective measures are taken,such as grounding.
- Use the type of power supply indicated on the device.Do not unpack and disassemble the machine by yourself,otherwise,we will not undertake any free warranty service.
- To avoid eye injury,do not look directly at the projector lens when this device is working.
- Do not place the device on any items that may block the ventilation openings,such as cloth,blankets,etc.
- Since this device is not waterproof,avoid getting wet or splashing,and do not place any item containing liquid next to the device,such as vases,water cups,etc.
- Do not expose the device to rain or water to prevent electric shock.
- Unplug the power cord if the device will not be used for a long time.
- Transport the device with the original foam.
- Use the product in an environment within a temperature of 5°-35°,and do not use in a place over 2,000 meters at sea level.

Appearance

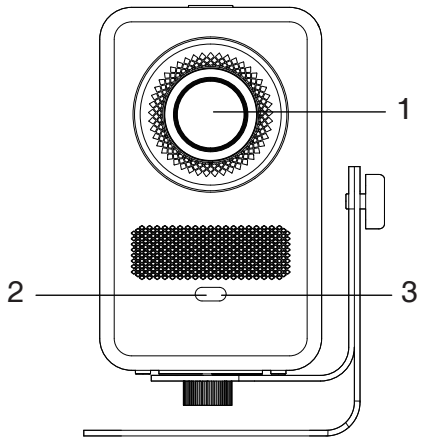

Front View

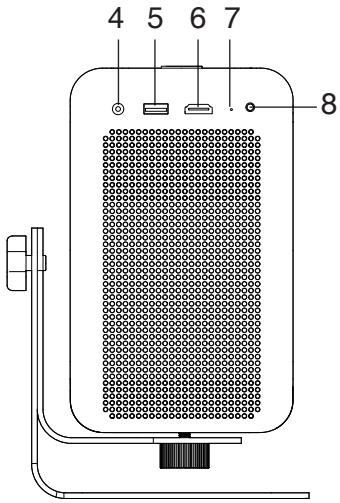

Back View

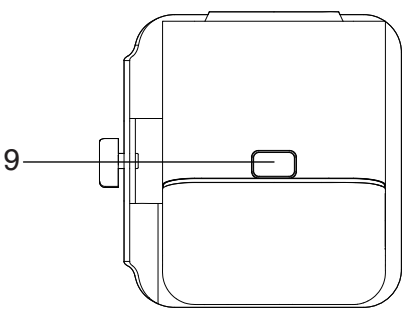

Vertical View

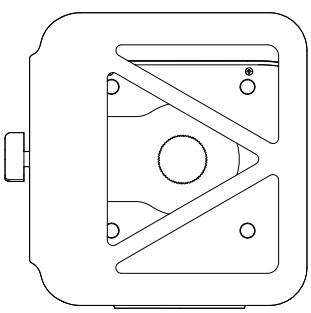

Bottom View

① Lens	② AF sensor	③ Infrared remote
④ DC port	⑤ USB port	⑥ HDMI port
⑦ Indicator	⑧ Audio in	⑨ ON/OFF

Packing list

Projector*1,Remote control*1, Instruction manual*1,Power Cable*1

NOTE: The camera on the device will correct projection screen information when performing auto focus and auto keystone functions,the information will be released afterward. Such information shall not be saved or uploaded

Remote Control

①		Power
②		Signal
③		Mouse
④		Home
⑤		Up
⑥		Left
⑦		Right
⑧		Down
⑨	OK	OK
⑩		Back
⑪		Bluetooth
⑫		Auto Focus
⑬		Focus-
⑭		Focus+
⑮		Vol-
⑯		Vol+

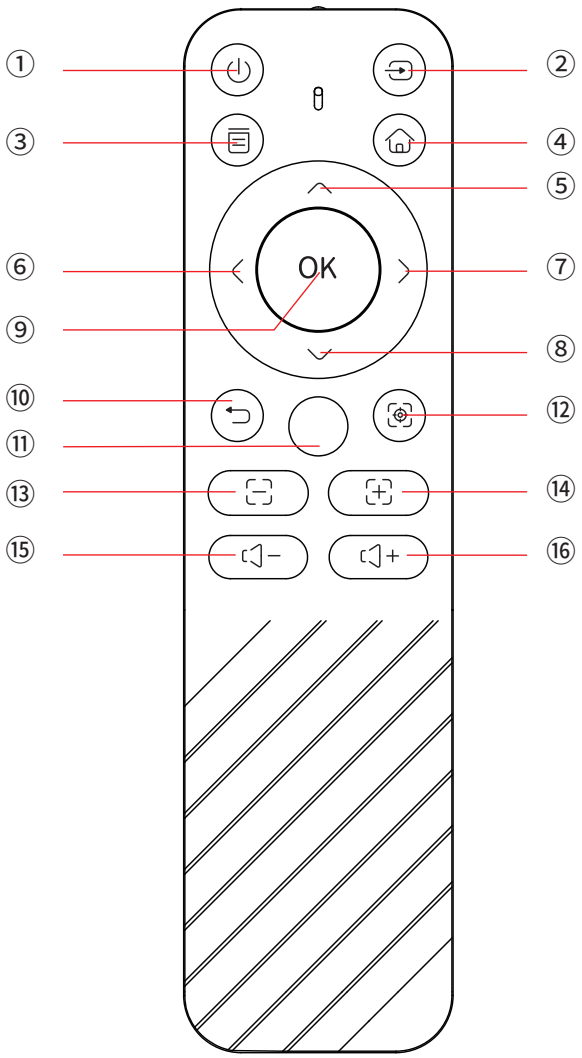

NOTE:

Install batteries correctly according to the +/- polarity before use; Optimal range for the remote control is within 5 meters; Batteries should be stored in a cool place when not in use; Ensure proper installation of batteries according to the device's positive (+) and negative (-) polarity indicators; Do not charge, disassemble, damage, or expose batteries to fire; Do not connect the positive (+) and negative (-) terminals of the same battery; Do not place unwrapped batteries in pockets; Do not mix batteries of different brands, types, or usage conditions (new and old batteries); Remove batteries from electronic devices if they will not be used for an extended period; Do not swallow batteries; Batteries are not toys, keep them away from children and do not allow them to handle or use them.

Product Instructions

Power Off:

Press the Power Button on the device or the Power Key on the remote control to access the shutdown menu.Select Power Off to shut down directly.

Remote Control Pairing:

Press the Bluetooth Button to access the pairing menu. Ensure the batteries are correctly installed. Place the remote within 20 cm of the projector, then press and hold the Left Key and Right Key simultaneously to pair via Bluetooth. On-screen notification will confirm successful pairing.

Network Connection:

Setting —— Network —— WiFi settings —— Select wifi —— Enter Password —— done

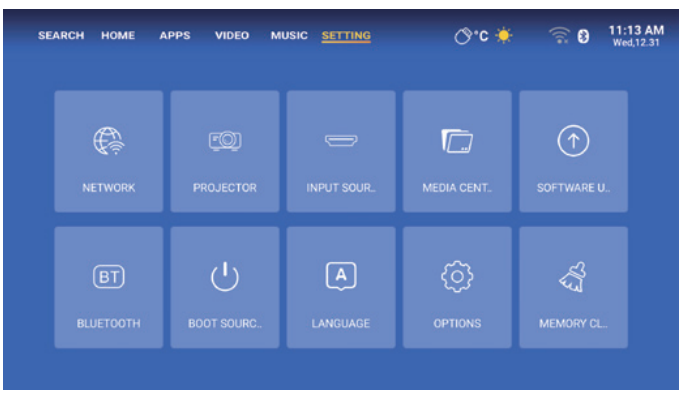

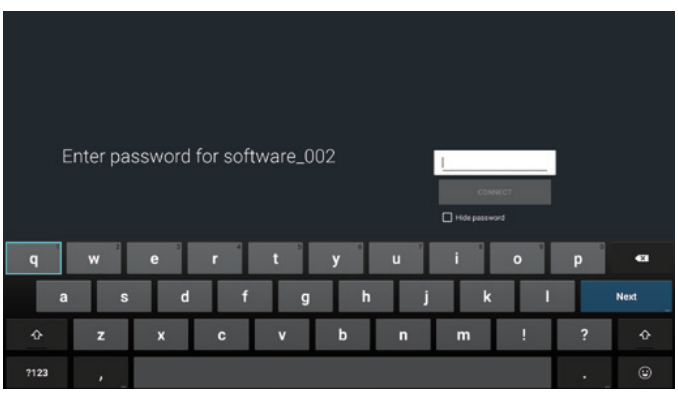

Note: Some WiFi networks may be incompatible due to frequency bands. If unable to connect, try using a mobile hotspot to test the projector's network connection.

Language Setting:

Setting —— Language —— Select Language —— Confirminterface.

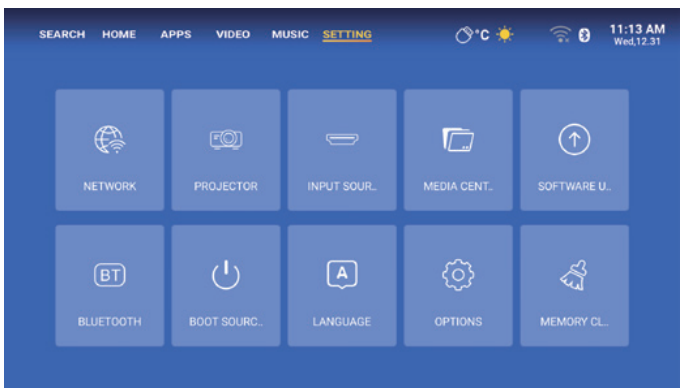

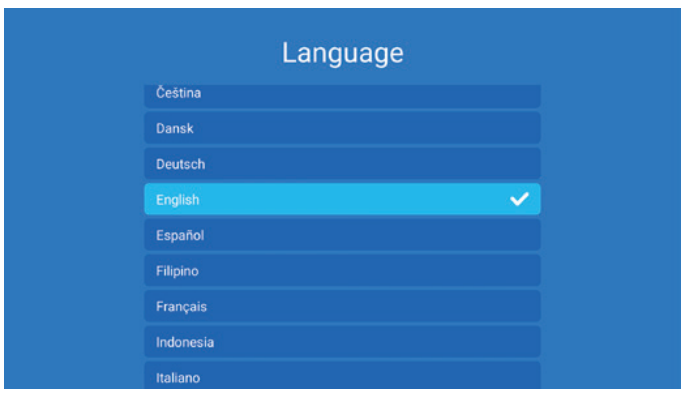

Image Focus:

· Auto Focus: The projector is set to enable auto-focus by default. When the projector is moved while powered on, the image will automatically adjust focus.

· One-Key Focus: Press the One-Key Focus button on the remote to perform automatic focus adjustment.

· Manual Focus: Press the Focus - or Focus + button on the remote to adjust focus manually, allowing for fine-tuning to achieve optimal image clarity.

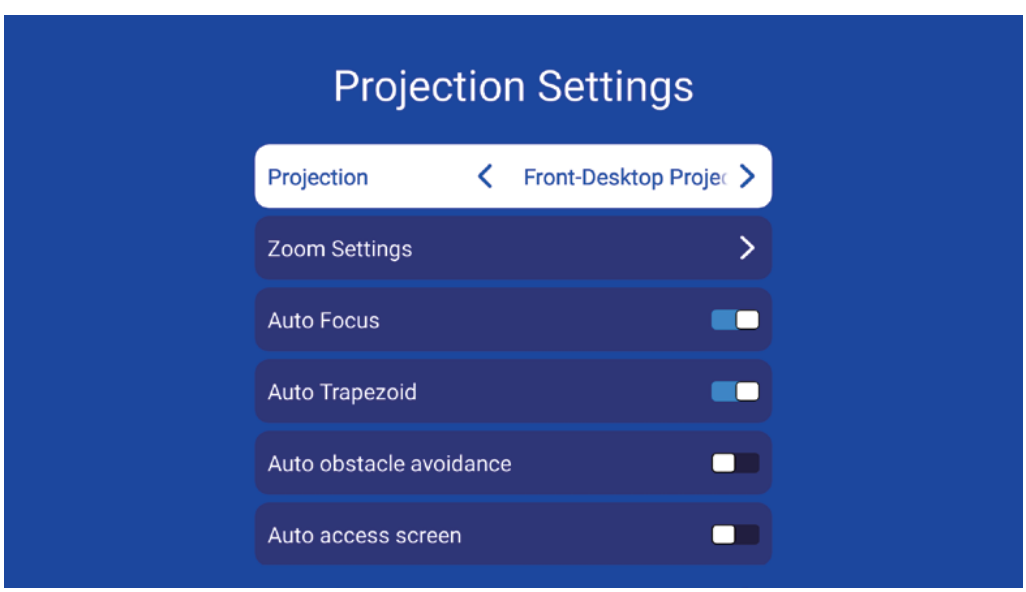

Trapezoid correction

Automatic trapezoid correction:

The projector is set to enable auto-correction by default. When the projector is moved while powered on, the image will automatically adjust for alignment. If it is not working, please check the settings. Setting —— Projector —— Projection Settings —— Automatic trapezoid —— press OK to open.

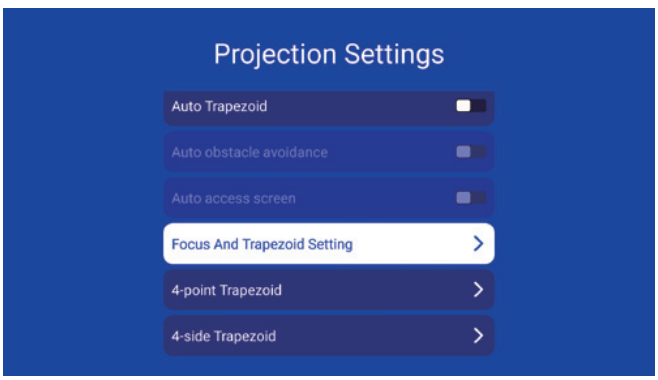

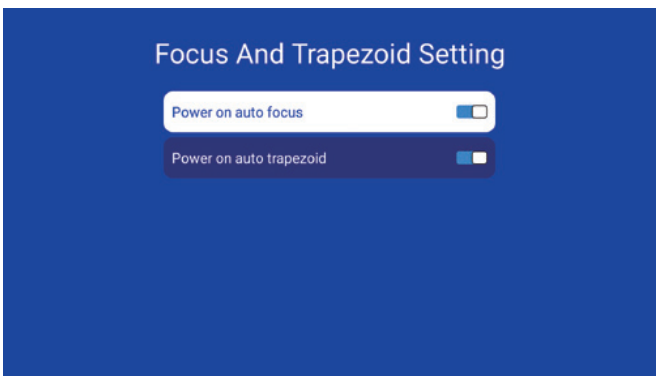

Manual trapezoid correction:

Automatic trapezoid correction results may vary depending on the usage scenario. Use manual correction for further fine-tuning. Setting —— Projector —— Projection Settings —— Choose 4 point Trapezoid or 4 side Trapezoid —— Press OK to manual trapezoid correction.

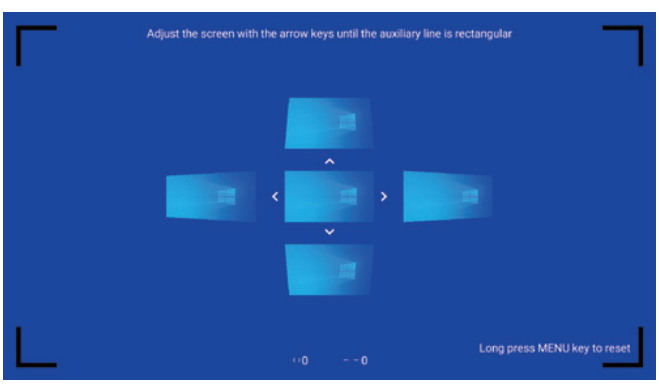

Note: Projector's side projection or front projection angle should not exceed 15°. Angles beyond this may impact the optimal performance of auto-focus and auto-correction features.

Zoom in

Setting —— Projector —— Projection Settings —— Zoom Settings —— Press OK to Confirm —— Adjust the Appropriate Size

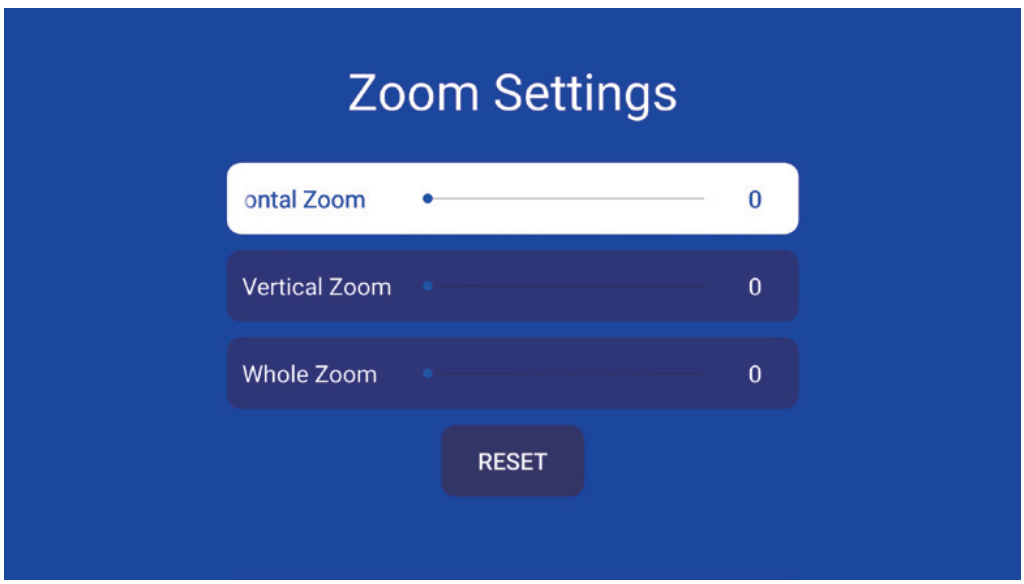

Connect Bluetooth

Setting —— Bluetooth —— Remotes & Accessories —— Add accessory.
Easily to manage Bluetooth devices connected to the projector.

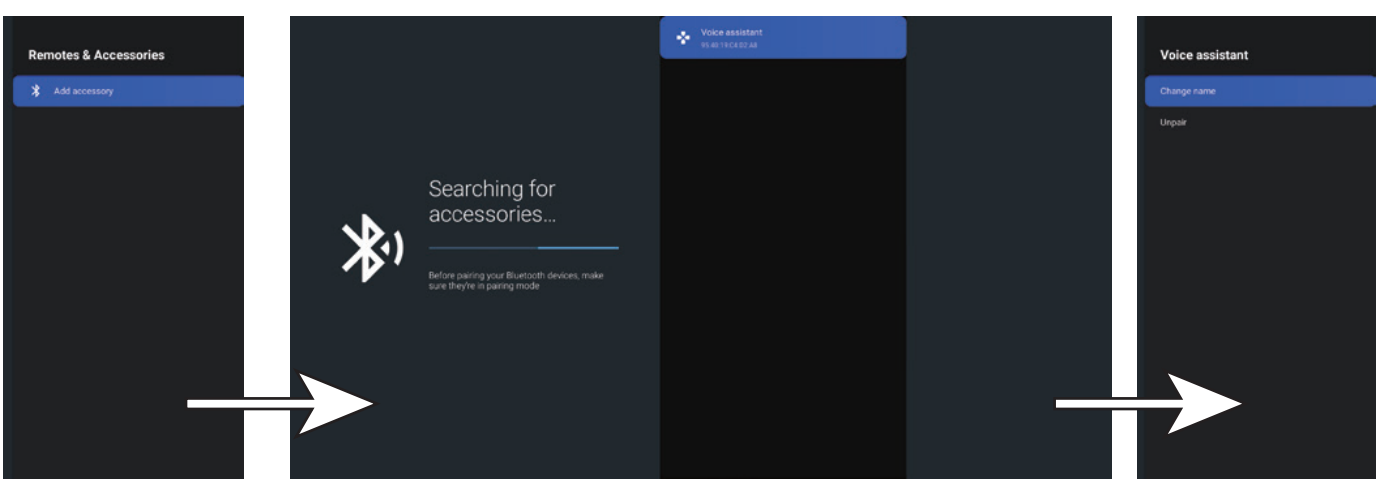

Bluetooth Speaker Mode

Home page —— APPS —— BlueTooth Speaker —— Connet with your phone

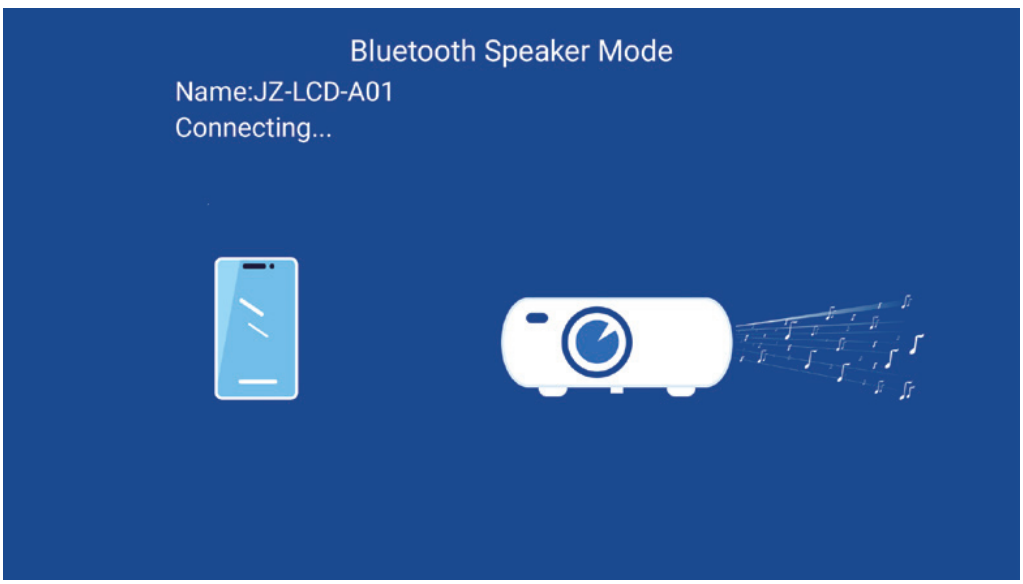

App Store

Home page —— APPS —— App Store —— install the selected apps

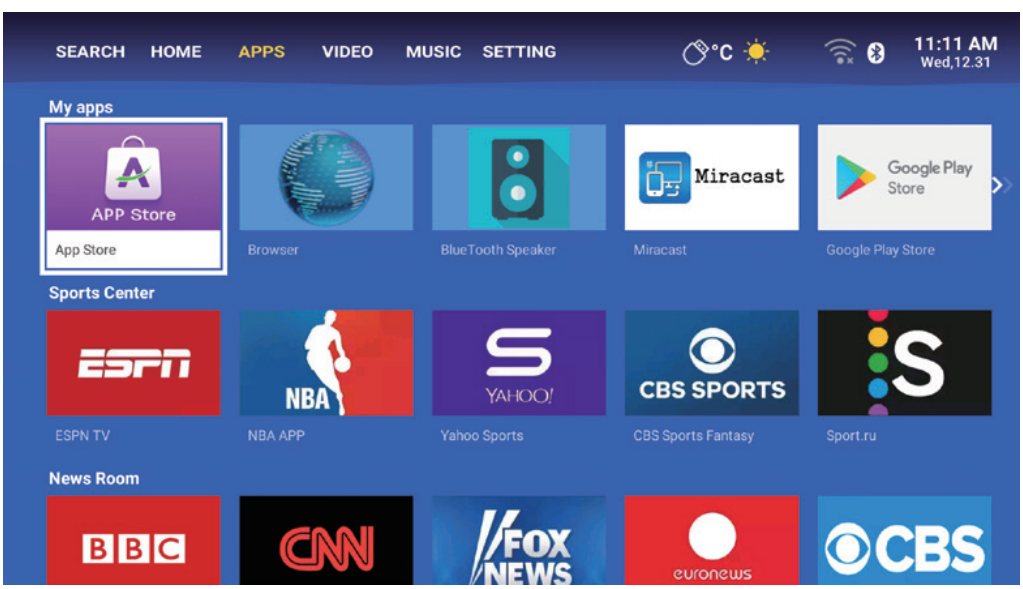

System Interface

Signal source

Settings —— Input source —— Select source —— Adjust up and down using remote

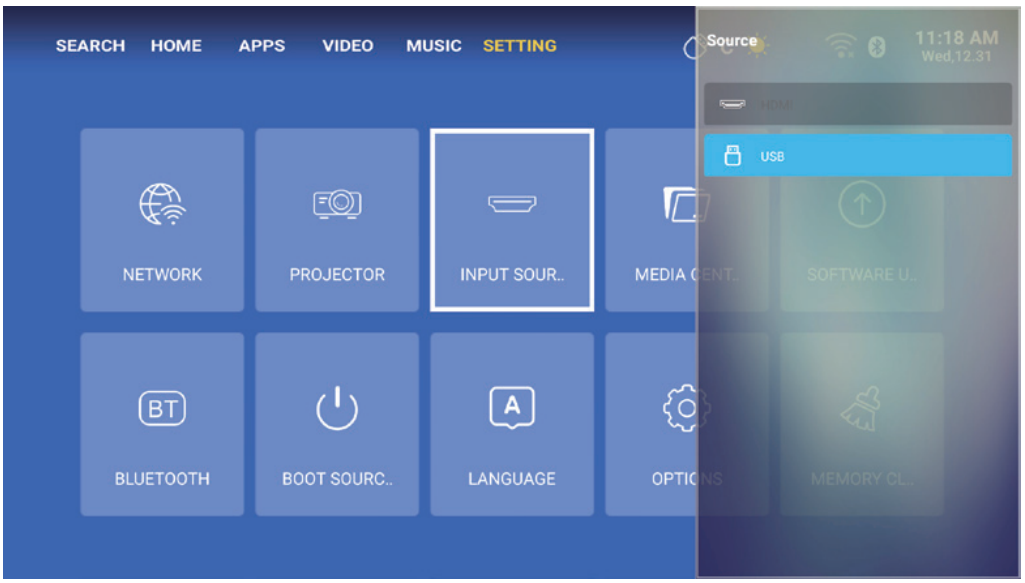

Screen Mirroring

Make sure the phone and projector are connected to the same WI-FI;

- [iOS System] Screen Mirroring and select the projector device to connect;
- [Android] Home page —— APPS —— Miracast —— OK —— Connect according to instructions;

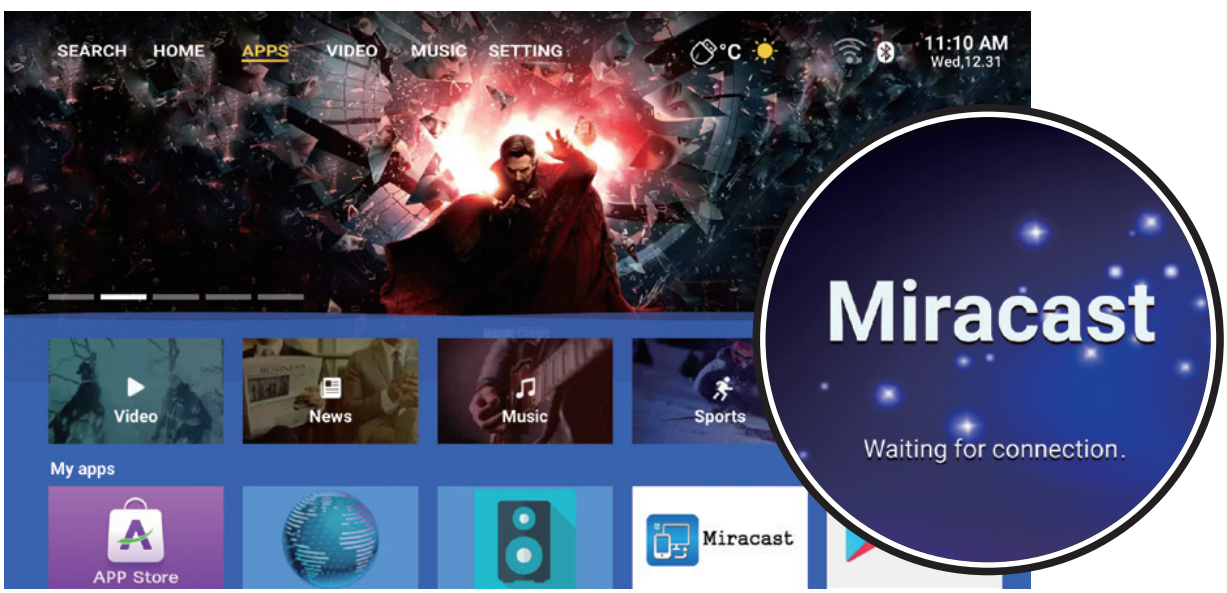

Projection Mode

In Settings —— Projector —— Projection Settings —— Projection, Select the desired projection mode to match different installation methods.

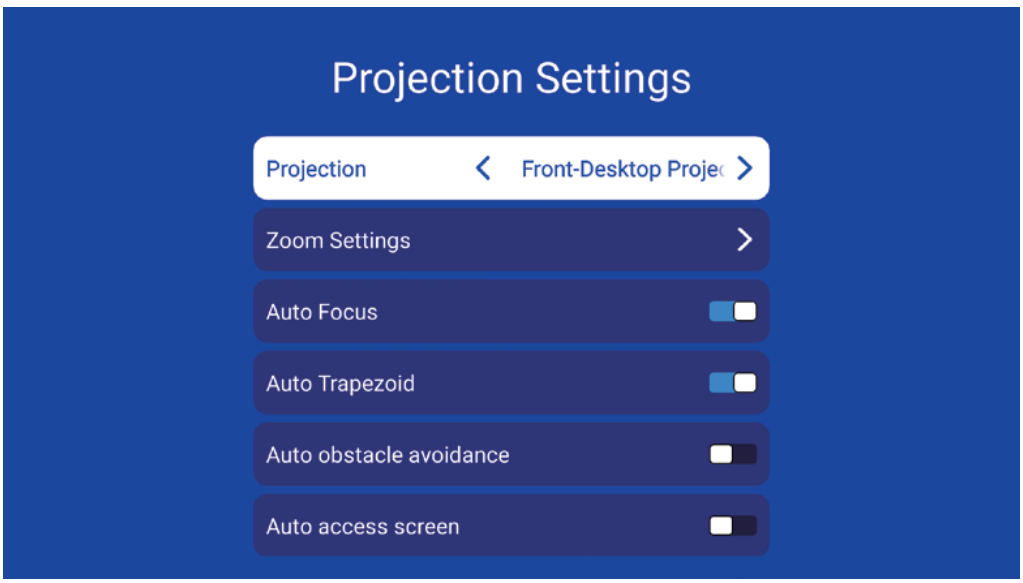

Sound Management

Settings —— Options —— Common Setting —— Device Preferences —— Sound —— Sound Effects Mode to select a preferred sound effect mode.

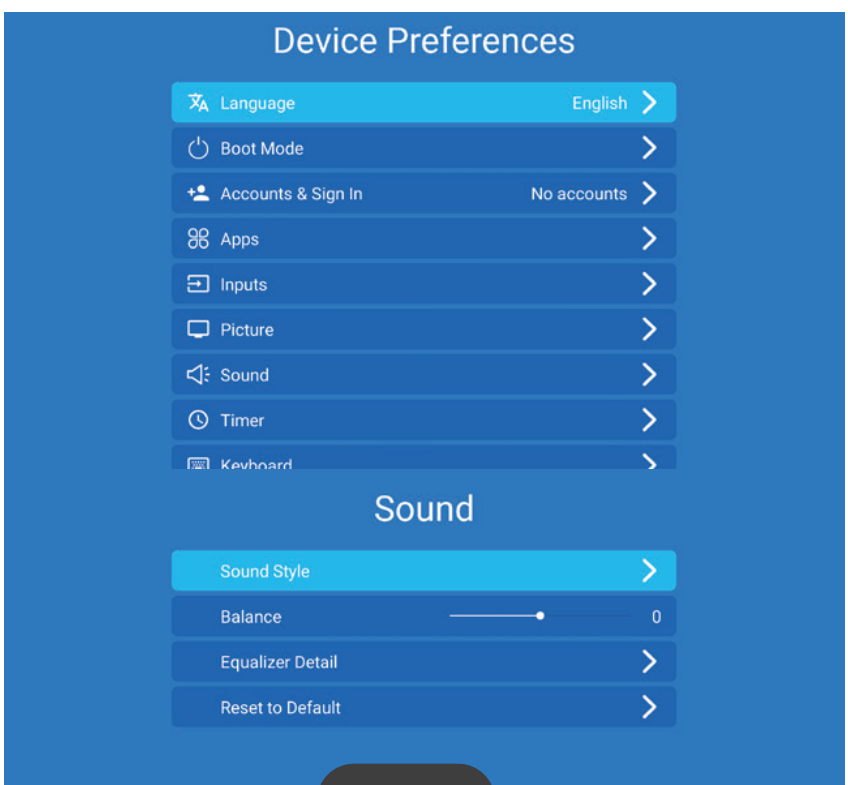

Supported Formats

· Audio Formats: MPEG Audio Layer III (.mp3), Wave Audio Files (.wav), Matroska Audio (.mka), OGG Vobis (.ogg), APE (.ape)

· Video Formats: AVI, TS, MPEG-2 TS Transport Stream(.ts), MPEG File Format(.mpeg), MPEG-4 Part 14 QuickTime(.mov), FlashVideo (.flv)

· Picture Formats: JPEG, PNG, BMP, JIF

· Text Formats: txt, word, ppt, excel, pdf, ini

Projection Distance and Screen Size

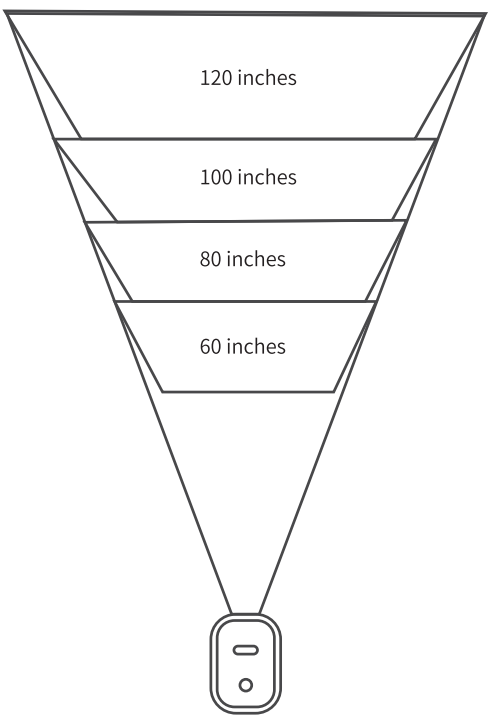

Screen Size(in)	Projection distance(m)
52	1.6
60	1.85
80	2.45
100	3.0
120	3.60
The scale of the picture 16:9	

Note: The above data are for reference only, please refer to the actual measurement.For best results, use an 80-inch size with at least a 1-meter distance.Do not cover the projector with fabric, leather, or other decorative materials.Keep a 50cm clearance around the air intake and exhaust vents to ensure proper cooling.The exhaust vent may become hot during use; avoid touching it.

Common Troubleshooting

Issue: No or Abnormal Display? System Freeze or Crash?

Solution:

Briefly press the power button on the remote or the device to shut down. Once the fan stops, unplug the power adapter. Reconnect the adapter and restart the device.

Issue: Remote control not working?

Solution:

Bluetooth may disconnection. Use infrared control by pointing the remote at the device' s front infrared receiver. Then, press the bluetooth buttons on the remote to pair it.

If the LED on the remote does not flash during operation, the remote may be out of power. Replace the batteries to resolve the issue.

Alternatively, use the device' s power button to restart. Once the system starts successfully, try using the remote again.

Issue: System overheating warning? Significant black blocks on the screen?

Solution:

Turn off the device immediately. Check for and remove any obstructions to ensure proper airflow. Allow the device to cool before restarting. If the issue persists, contact customer support.

Issue: Unable to connect to the network?

Solution:

Some WiFi networks may be incompatible due to frequency bands. If unable to connect, try using a mobile hotspot to test the network connection.

Issue: Unable to read USB drives?

Solution:

Check if the USB port is clean. Try inserting the USB drive into another device for testing.

Issue: Unable to install apps?

Solution:

Ensure the app package is not corrupted. Prefer apps approved and listed in the App Store section of the system.

FCC Statement

This device complies with part 15 of the FCC Rules. Operation is subject to the following two conditions: (1) This device may not cause harmful interference, and (2) this device must accept any interference received, including interference that may cause undesired operation.

Note: This equipment has been tested and found to comply with the limits for a Class B digital device, pursuant to part 15 of the FCC Rules. These limits are designed to provide reasonable protection against harmful interference in a residential installation. This equipment generates, uses and can radiate radio frequency energy and, if not installed and used in accordance with the instructions, may cause harmful interference to radio communications. However, there is no guarantee that interference will not occur in a particular installation. If this equipment does cause harmful interference to radio or television reception, which can be determined by turning the equipment off and on, the user is encouraged to try to correct the interference by one or more of the following measures:

· Reorient or relocate the receiving antenna.

· Increase the separation between the equipment and receiver.

· Connect the equipment into an outlet on a circuit different from that to which the receiver is connected.

· Consult the dealer or an experienced radio/TV technician for help.

RF warning statement:

This equipment complies with FCC radiation exposure limits set forth for an uncontrolled environment. This equipment should be installed and operated with minimumdistance 20cm between the radiator & your body.

Any Changes or modifications not expressly approved by the party responsible for compliance could void the user's authority to operate the equipment.

WEEE & CE CAUTION

The symbol indicates DC voltage

RECYCLING

This product bears the selective sorting symbol for Waste electrical and electronic equipment (WEEE). This means that this product must be handled pursuant to European directive 2012/19/EU in order to be recycled or dismantled to minimize its impact on the environment. User has the choice to give his product to a competent recycling organization or to the retailer when he buys a new electrical or electronic equipment. This product can be used across EU member states.

The mains plug is used as the disconnect device, the disconnect device shall remain readily operable.EU Compliance Statement: Cheerlux (Shenzhen) Electronic Technology Co., Ltd. hereby declares that this device is in compliance with the essential requirements and other relevant provisions of the Directive 2014/53/EU.

EC	REP

Apex CE Specialists GmbH
Grafenberger Allee 277-287,40237 Düsseldorf,DE
Info@apex-ce.de

Model Name: Projector **Model No**:Y5

Supply source: AC110-240V 50~60HZ 67.2W MAX

Thank you for purchasing from EXTRAVIS.Your satisfaction is always our first priority.We are committed to delivering the best products and services in the way our customers want.Whenever you have any problem,please feel free to contact us.

support@extravishome.com

EXTRAVIS