Nocpix

Quick Start Guide

V2.1

VISTA | Thermal Imaging Monocular

VISTA S50R / VISTA H50R / VISTA H50 / VISTA H35R
VISTA H35

FCC ID:2BHFB-3C-00

Labeling requirements.
This device complies with part 15 of the FCC Rules. Operation is subject to the following two conditions: (1) This device may not cause harmful interference, and (2) this device must accept any interference received, including interference that may cause undesired operation.

Information to user.
Any Changes or modifications not expressly approved by the party responsible for compliance could void the user's authority to operate the equipment.

EMC Class B

Note: This equipment has been tested and found to comply with the limits for a Class B digital device, pursuant to part 15 of the FCC Rules. These limits are designed to provide reasonable protection against harmful interference in a residential installation. This equipment generates uses and can radiate radio frequency energy and, if not installed and used in accordance with the instructions, may cause harmful interference to radio communications. However, there is no guarantee that interference will not occur in a particular installation. If this equipment does cause harmful interference to radio or television reception, which can be determined by turning the equipment off and on, the user is encouraged to try to correct the interference by one or more of the following measures:

-Reorient or relocate the receiving antenna.-Increase the separation between the equipment and receiver.

-Connect the equipment into an outlet on a circuit different from that to which the receiver is connected.

-Consult the dealer or an experienced radio/TV technician for help.

Body Operation

This device was tested for typical body operations. To comply with RF exposure requirements, a minimum separation distance of 2mm must be maintained between the user’s body and the handset, including the antenna. Third-party belt-clips, holsters, and similar accessories used by this device should not contain any metallic components. Body accessories that do not meet these requirements may not comply with RF exposure requirements and should be avoided. Use only the supplied or an approved antenna.

EN

Please read this manual before using the product, and keep the guide for future reference.
For detailed information about the device, please download the complete user manual from the official website (www.nocpix-.com).

DE

Bitte lesen Sie dieses Handbuch sorgfältig durch, bevor Sie dieses Produkt verwenden, und bewahren Sie es zum späteren Nachschlagen gut auf.
Ausführliche Informationen über das Gerät finden Sie im vollständigen Benutzerhandbuch, das Sie von der offiziellen Website (www.nocpix.com) herunterlasen können.

IT

Si prega di leggere questa guida prima di utilizzare il prodotto e conservarla per riferimento futuro.
Per informazioni dettagliate sul dispositivo, si prega di scaricare il manuale d'uso completo dal sito ufficiale (www.nocpix.com).

FR

Veuillez consulter ce guide avant d'utiliser le produit et gardez-le pour vous y référer ultérieurement.
Pour plus d'informations sur l'appareil, veuillez télécharger le manuel d'utilisation complet sur le site officiel (www.nocpix-.com).

ES

Lea este manual antes de usar el producto yconserve la guía para referencia futura.
Para obtener información detallada sobre el dispositivo, descargue el manual de usuario completo del sitio web oficial (www.nocpix.com).

CZ

Před použitím výrobku si prosím přečtěte tuto příručku a uchovávejte ji pro budoucí použití.
Pro podrobné informace o zařízení si prosím stáhněte kompletní uživatelskou příručku z oficiálních webových stránek (www.nocpix.com).

PL

Przed użyciem proszę uważnie przeczytać niniejszy podręcznik użytkownika i przechować go w odpowiedni sposób na przyszłość.
Aby uzyskać szczegółowe informacje o urządzeniu, pobierz pełny podręcznik użytkowania ze strony internetowej (www.nocpix.com).

SV

Vänligen läs igenom denna anvisning innan du använder produkten, och behåll guiden för framtida referens.
Detaljerad information om enheten finns i den fullständiga bruksanvisningen som du kan ladda ner från den officiella webbplatsen (www.nocpix.com).

HU

Kérjük, a termék használata előtt figyelmesen olvassa el a jelen használati útmutatót, és őrizze meg későbbi használatra.
A készülékkel kapcsolatos részletes információkért kérjük, töltse le a teljes felhasználói kézikönyvet a hivatalos weboldalról (www.nocpix.com).

PT

Leia este manual antes de usar o produto e guarde-o para referência futura.
Para obter informações detalhadas sobre o dispositivo, baixe o manual do usuário completo no site oficial (www.nocpix.com).

RoHS

Important Safety Information

Environmental influences

Never point the lens of the device directly at intense heat sources such as the sun or laser equipment. The objective lens and eyepiece can function as a burning glass and damage the interior components.

Risk of swallowing

Do not place this device in the hands of small children. Incorrect handling can cause small parts to come loose which may be swallowed.

Safety instructions for use

· Handle the device with care: rough handling may damage the battery.
· Do not expose the device to fire or high temperatures.
· Install the batteries correctly according to the instruction on the device. Reverse connection is prohibited.
· The battery capacity decreases when operated in a cold ambient temperature. This is not a fault and occurs for technical reasons.
· Always store the device in a dry, well-ventilated space. For prolonged storage, remove the batteries.
· The recommended temperature for using this product is -20°C to +50°C. Otherwise, it will affect the service life of the product.
· Do not store the device for long periods at temperatures below 20°C or above 50°C, or this will permanently reduce the capacity of the battery.
· If the device has been damaged or the battery is defective, send the device to our after-sales service for repair.

EU Compliance Statement

Wireless transmitter module frequency range:
WLAN: 2.412-2.472GHz (For EU)
Wireless transmitter module power < 20dBm (only for EU)

We, Inlumen Technologies Co., Ltd. hereby declares that the radio equipment types VISTA are in compliance with the Directives 2014/53/EU and 2011/65/EU.

Disposal of batteries

2023/1542 (Battery Regulation): This product contains a battery that cannot be disposed of as unsorted municipal waste in the European Union. For battery details, refer to the documentation of the specific product. The battery is marked with this symbol, which may include Cd (indicating cadmium), Pb (indicating lead), or Hg (indicating mercury). For proper recycling, please return the battery to your supplier or send it to a designated collection point. For more information, visit www.recyclethis.info.

User information on the disposal of electrical and electronic devices (private households)

2012/19/EU (WEEE directive): Products marked with this symbol cannot be disposed of as unsorted municipal waste in the European Union. For proper recycling, return this product to your local supplier upon the purchase of equivalent new equipment, or dispose of it at designated collection points. For more information see: www.recyclethis.info.

For business customers within the European Union

Please contact your dealer or supplier regarding the disposal of electrical and electronic devices. He will provide you with further information.

Information on disposal in other countries outside of the European Union

This symbol is only applicable in the European Union. Please contact your local authority or dealer if you wish to dispose of this product and ask for a disposal option.

Intended use

The device is intended for displaying heat signatures during nature observation, remote hunting observations and for civil use. This device is not a toy for children.

Use the device only as described in this operating manual. The manufacturer and the dealer accept no liability for damages which arise due to non-intended or incorrect use.

Function test

Before use, please ensure that your device has no visible damage.
Test to see if the device displays a clear, undisturbed image.
Check that the settings for the thermal imaging monocular are correct.

Installing/Removing the battery

The VISTA series thermal imaging monocular need to install one battery pack for use. Refer to the section Battery Installation for details.

Laser Warning

VISTA S50R / VISTA H50R / VISTA H35R

CLASS 1 CONSUMER LASER PRODUCT
EN 50689:2021

VISTA Quick Start Guide

EN	Thermal imaging monocular	1-13
DE	Wärmebild-Monokularfernrohr	14-26
IT	Monocolo per immagini termiche	27-39
FR	Monoculaire d'imagerie thermique	40-52
ES	Monocular de imagen térmica	53-65
CZ	Termovizní monokulár	66-78
PL	Monokular termowizyjny	79-91
SV	Termiskt bildmonokulär	92-104
HU	Termikus képalkotó monokuláris	105-117
PT	Monocular de Imagem Térmica	118-130

Accessories

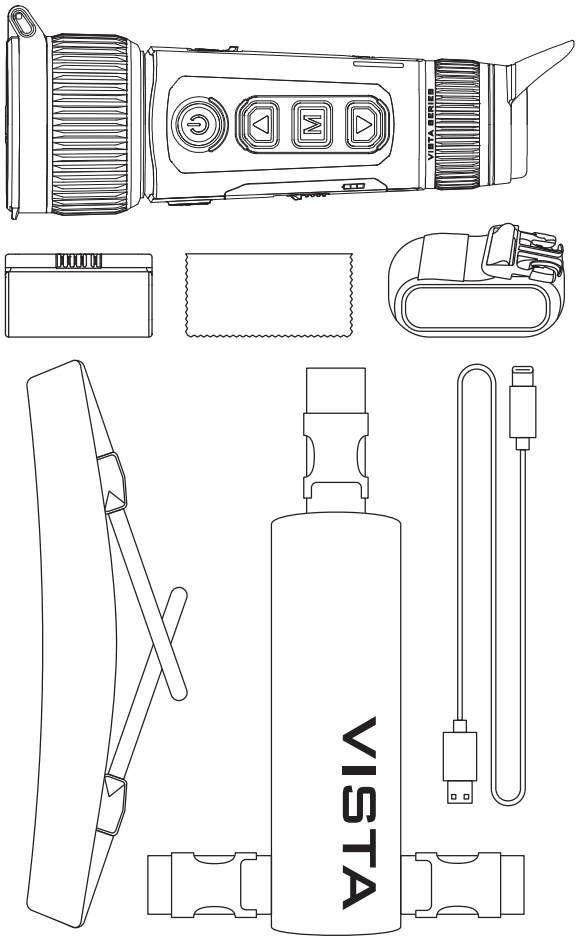

Battery Install

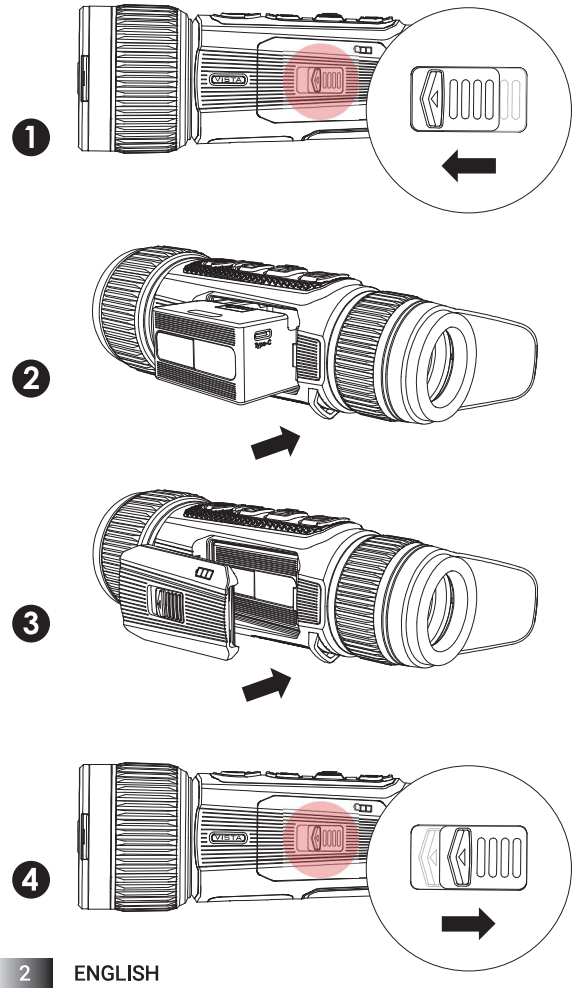

Button Descriptions

VISTA S50R / VISTA H50R / VISTA H35R

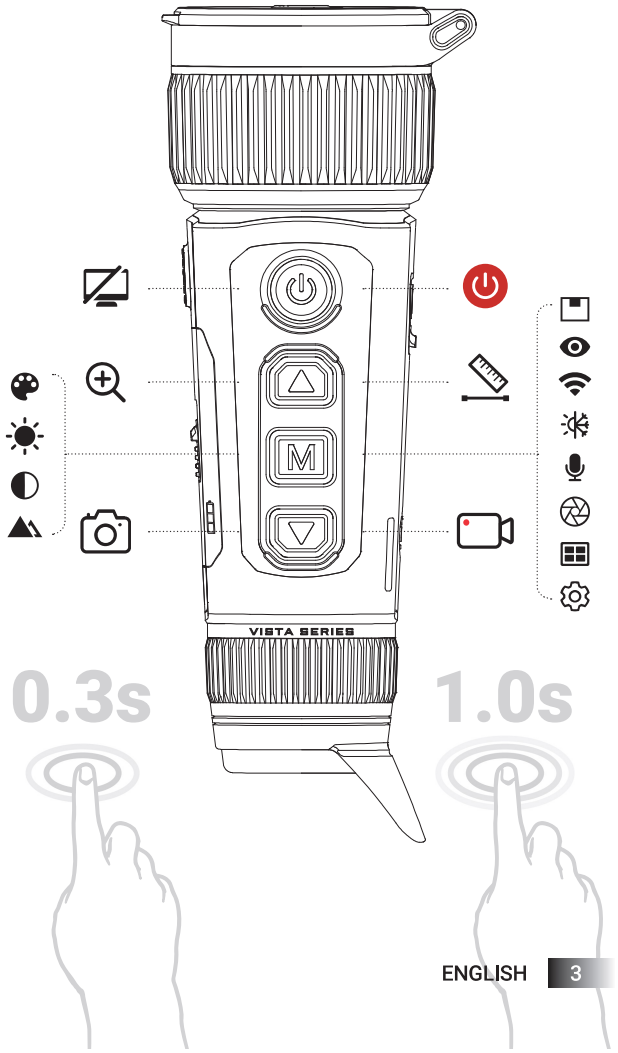

Button Descriptions

VISTA H50 / VISTA H35

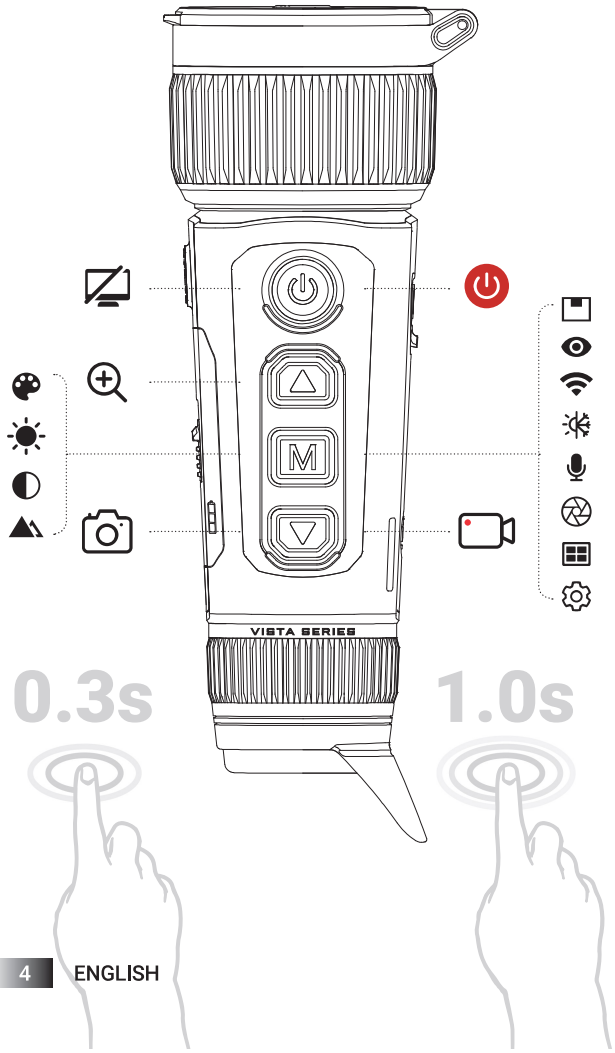

Button Descriptions

1.0s

0.3s 1.0s

Shortcut Menu

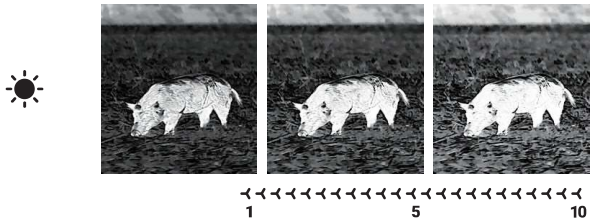

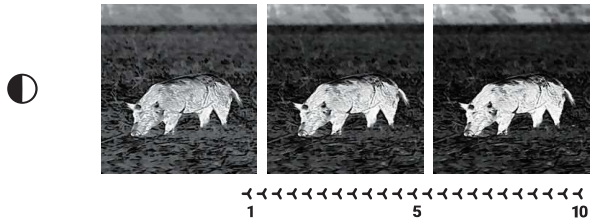

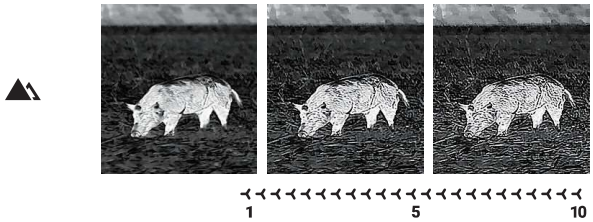

Main Menu

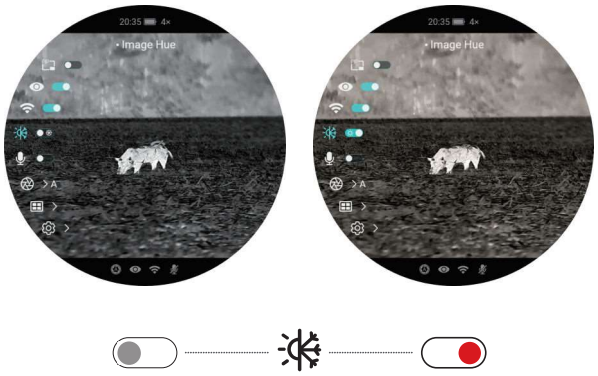

Show Hide

App

Download on the App Store

GET IT ON Google Play

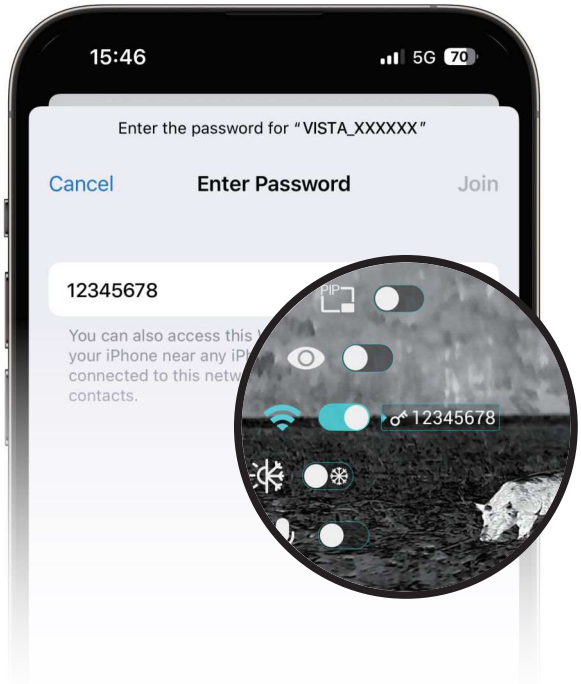

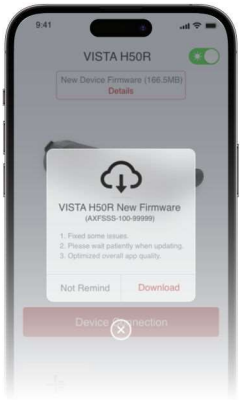

Firmware upgrade

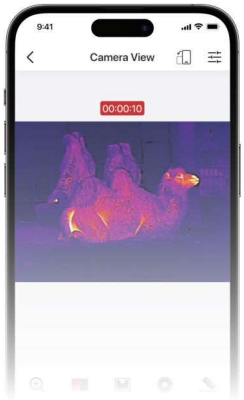

Real-time image transmission

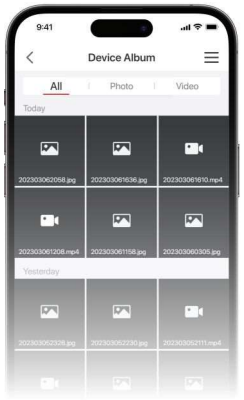

Device file

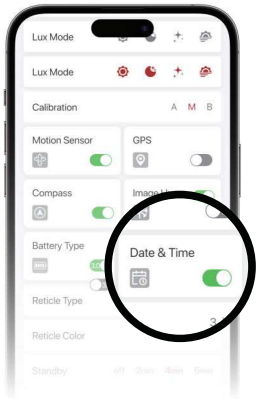

Date & Time calibration

Specifications

Model	VISTA H35	VISTA H50
Thermal Sensor, Pixels	640×512,12μm	
NETD, mK	≤15	
Frame rate, Hz	60	
Objective lens, mm	35 F0.9	50 F0.9
Field of View (H×V), °/m at 100m	12.5×10.0/ 22×18	8.8×7.0/ 15×12
Magnification, ×	3~28	4~40
Detective range, m (Target size: 1.7m × 0.5m, P(n)=99%)	1800	2600
Exit relief, mm	25	
Exit pupil diameter, mm	8	
Diopter, D	-4 ~ +6	
Display	AMOLED 2560×2560	
Battery Type	Replaceable li-ion battery pack IBP-7/4400mAh	
Max. operation time, (t=22°C) h	5.5	
MIC	Support	
Memory capacity, GB	64	
IP rating	IP67	
Operating temperature, ºC	-20 ~ +50	
Weight, g (with battery)	600	630
Dimension, mm	184×61×71	190×67×79

Model	VISTA H35R	VISTA H50R
Thermal Sensor, Pixels	640×512,12μm	
NETD, mK	≤15	
Frame rate, Hz	60	
Objective lens, mm	35 F0.9	50 F0.9
Field of View (H×V), °/m at 100m	12.5×10.0/ 22×18	8.8×7.0/ 15×12
Magnification, ×	3~28	4~40
Detective range, m (Target size: 1.7m × 0.5m, P(n)=99%)	1800	2600
Exit relief, mm	25	
Exit pupil diameter, mm	8	
Diopter, D	-4 ~ +6	
Display	AMOLED 2560×2560	
Battery Type	Replaceable li-ion battery pack IBP-7/4400mAh	
Max. operation time, (t=22°C) h	5.5	
Safety class for laser	Class 1	
LRF, m	1200	
MIC	Support	
Memory capacity, GB	64	
IP rating	IP67	
Operating temperature, °C	-20 ~ +50	
Weight, g (with battery)	640	650
Dimension, mm	190×67×79	194×70×82

Model	VISTA S50R
Thermal Sensor, Pixels	1280×1024,12μm
NETD, mK	≤15
Frame rate, Hz	60
Objective lens, mm	50 F0.9
Field of View (H×V), °/m at 100m	17.5×14.0/31×25
Magnification, ×	2~40
Detective range, m (Target size: 1.7m × 0.5m, P(n)=99%)	2600
Exit relief, mm	25
Exit pupil diameter, mm	8
Diopter, D	-5 ~ +3
Display	AMOLED 2560×2560
Battery Type	Replaceable li-ion battery pack IBP-7/4400mAh
Max. operation time, (t=22°C) h	4.5
Safety class for laser	Class 1
LRF, m	1200
MIC	Support
Memory capacity, GB	64
IP rating	IP67
Operating temperature, °C	-20 ~ +50
Weight, g (with battery)	690
Dimension, mm	201×70×82

Get More Information

Website:
www.nocpix.com

User manual

Facebook

Instagram

YouTube

Zubehör

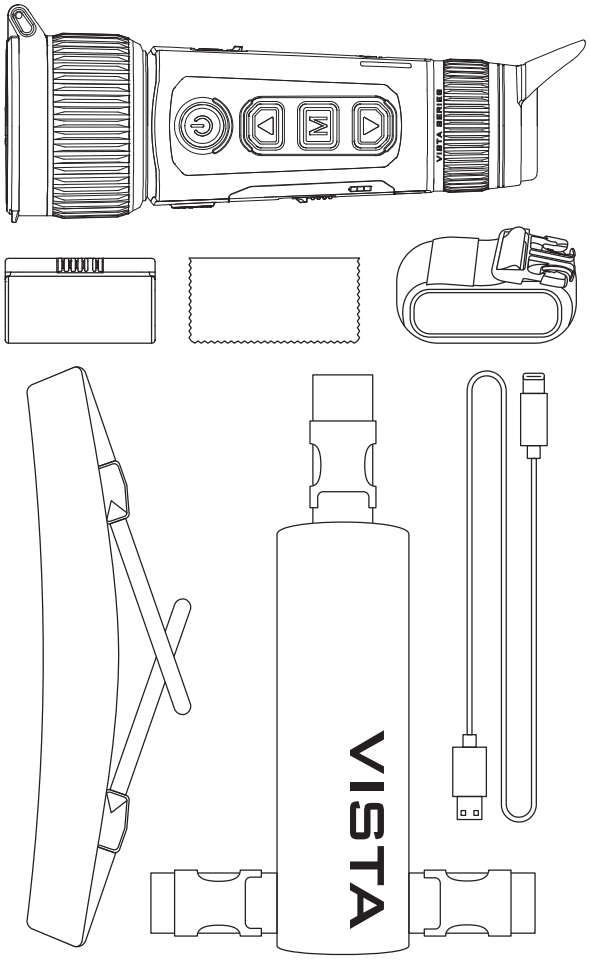

Batterie Installieren

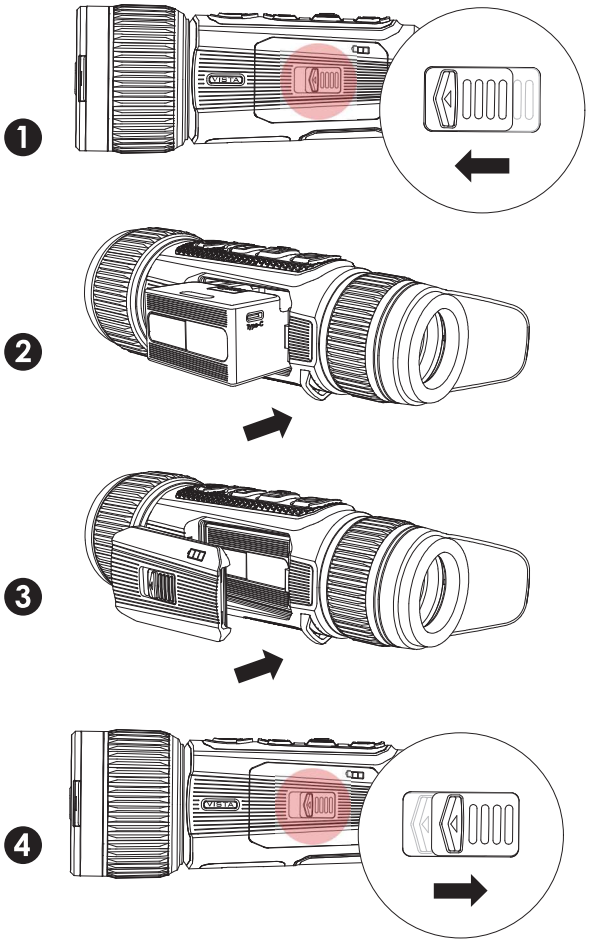

Schlüsselbeschreibung

VISTA S50R / VISTA H50R / VISTA H35R

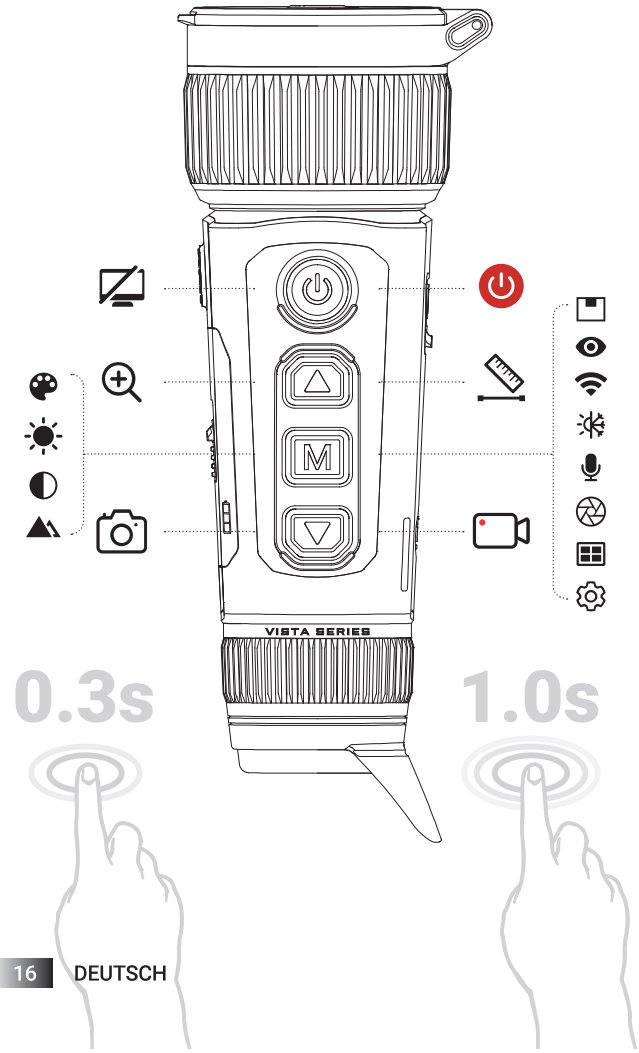

Schlüsselbeschreibung

VISTA H50 / VISTA H35

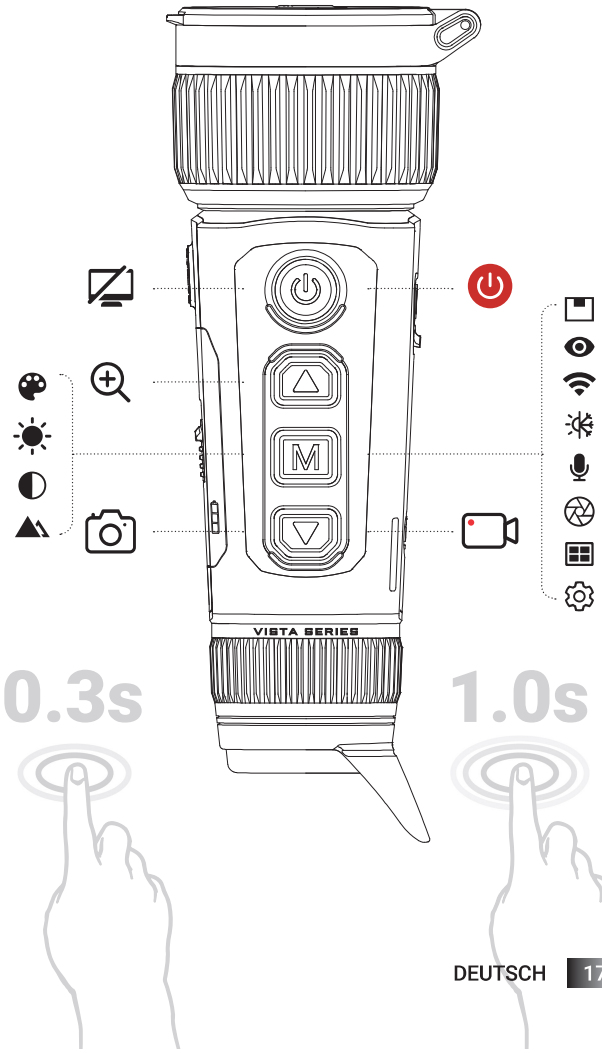

Schlüsselbeschreibung

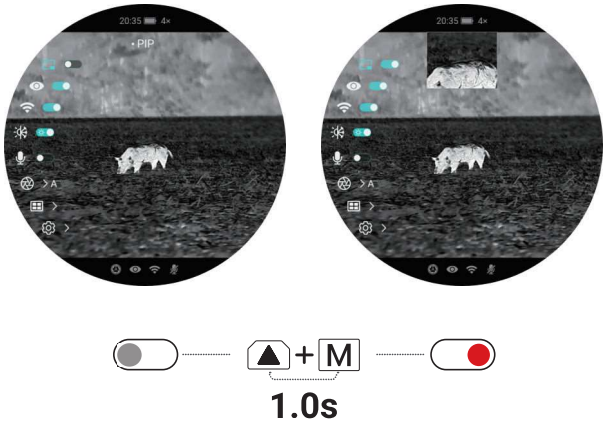

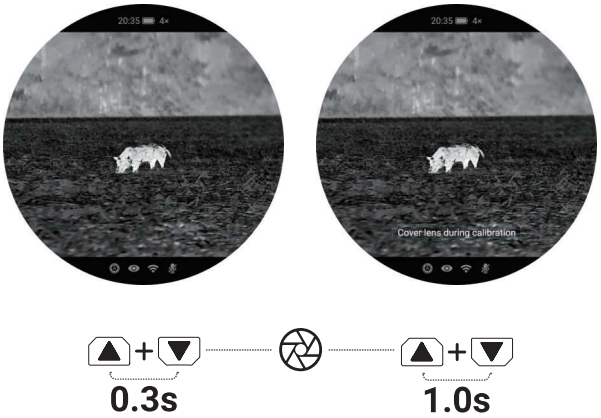

Kontextmenü

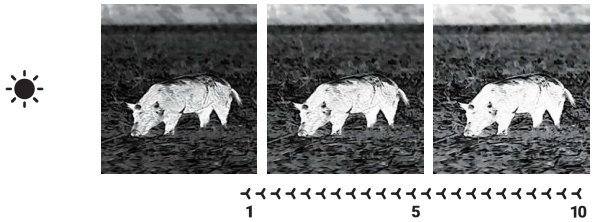

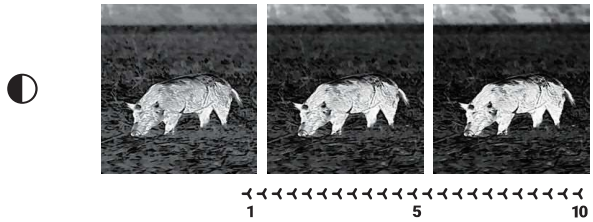

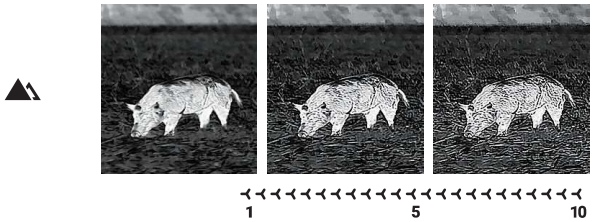

Hauptmenü

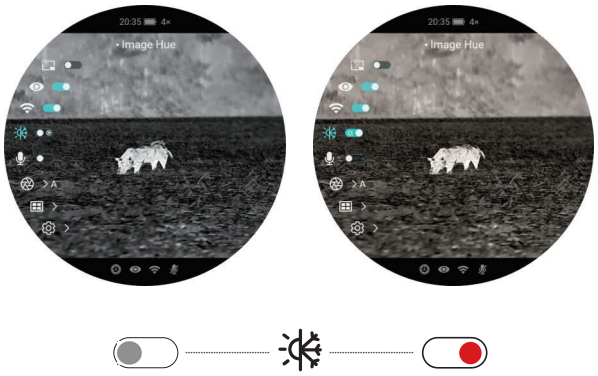

Zeigen Verbergen

App

Download on the App Store

GET IT ON Google Play

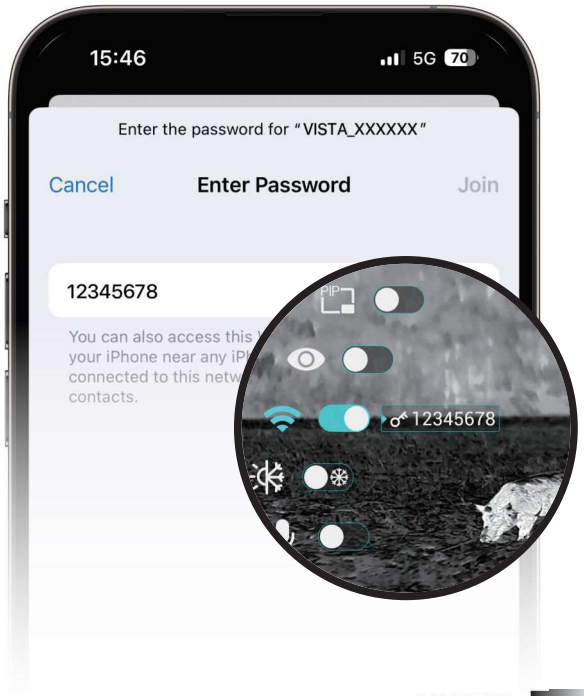

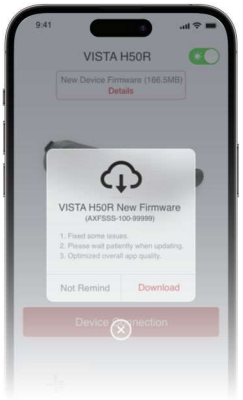

Firmware-Upgrade

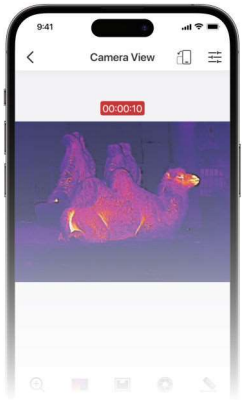

Bildübertragung
in Echtzeit

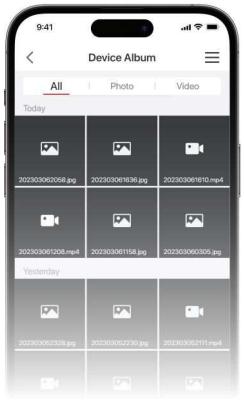

Gerätedatei

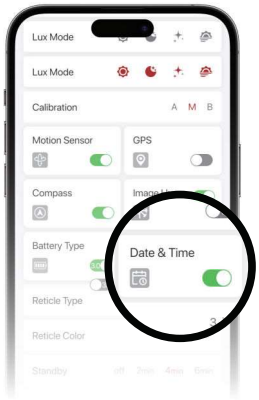

Kalibrierung von
Datum und Uhrzeit

Spezifikationen

Modul	VISTA H35	VISTA H50
Wärmesensor, Pixels	640×512,12μm	
NETD, mK	≤15	
Bildrate, Hz	60	
Objektivlinse, mm	35 F0.9	50 F0.9
Sichtfeld, °/m bei 100m	12.5×10.0/ 22×18	8.8×7.0/ 15×12
VergröBerung, x	3~28	4~40
Detektionsbereich, m (ZielgröBe: 1.7mx0,5m,P(n)=99%)	1800	2600
Abstand derAustrittspupille, mm	25	
Durchmesser derAustrittspupille, mm	8	
Dioptrien, D	-4 ~ +6	
Displlay	AMOLED 2560×2560	
Batterie typ	Austauschbarer Li-Ionen Akku IBP-7/4400 mAh	
Max.Batterielebensdauer(t=22°C), h	5.5	
Mikrofon	Unterstüzt	
Eingebaute SpeichergröBe, GB	64	
IP-Bewertung	IP67	
Betriebstemperatur, °C	-20 ~ +50	
Gewicht, g (mit Batterie)	600	630
Abmessung, mm	184×61×71	190×67×79

Modul	VISTA H35R	VISTA H50R
Wärmesensor, Pixels	640×512,12μm	
NETD, mK	≤15	
Bildrate, Hz	60	
Objektivlinse, mm	35 F0.9	50 F0.9
Sichtfeld, °/m bei 100m	12.5×10.0/ 22×18	8.8×7.0/ 15×12
VergröBerung, x	3~28	4~40
Detektionsbereich, m (ZielgröBe: 1.7mx0,5m,P(n)=99%)	1800	2600
Abstand derAustrittspupille, mm	25	
Durchmesser derAustrittspupille, mm	8	
Dioptrien, D	-4 ~ +6	
Displlay Spezifikationen	AMOLED 2560×2560	
Batterie typ	Austauschbarer Li-Ionen Akku IBP-7/4400 mAh	
Max.Batterielebensdauer(t=22°C), h	5.5	
Sicherheitsklasse für Laser	Class 1	
LRF, m	1200	
Mikrofon	Unterstüzt	
Eingebaute SpeichergröBe, GB	64	
IP-Bewertung	IP67	
Betriebstemperatur, °C	-20 ~ +50	
Gewicht, g (mit Batterie)	640	650
Abmessung, mm	190×67×79	194×70×82

Modul	VISTA S50R
Wärmesensor, Pixels	1280×1024,12μm
NETD, mK	≤15
Bildrate, Hz	60
Objektivlinse, mm	50 F0.9
Sichtfeld, °/m bei 100m	17.5×14.0/31×25
VergröBerung, x	2~40
Detektionsbereich, m (ZielgröBe: 1.7mx0,5m,P(n)=99%)	2600
Abstand derAustrittspupille, mm	25
Durchmesser derAustrittspupille, mm	8
Dioptrien, D	-5 ~ +3
Displlay Spezifikationen	AMOLED 2560×2560
Batterie typ	Austauschbarer Li-Ionen Akku IBP-7/4400 mAh
Max.Batterielebensdauer(t=22°C), h	4.5
Sicherheitsklasse für Laser	Class 1
LRF, m	1200
Mikrofon	Unterstüzt
Eingebaute SpeichergröBe, GB	64
IP-Bewertung	IP67
Betriebstemperatur, °C	-20 ~ +50
Gewicht, g (mit Batterie)	690
Abmessung, mm	201×70×82

Mehr Informationen bekommen

Webseite:
www.nocpix.com

Benutzerhandbuch

Facebook

Instagram

YouTube

Accessori

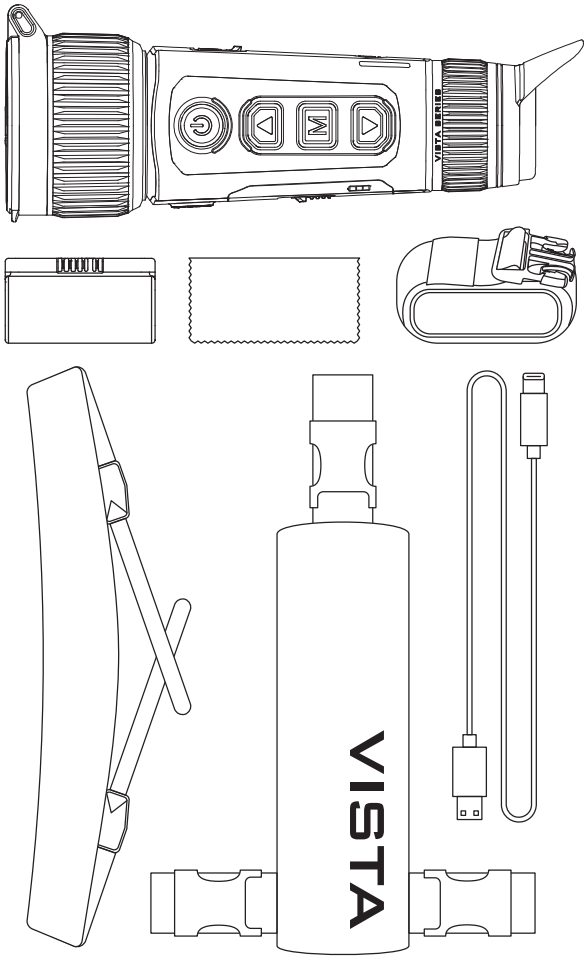

Installazione della batteria

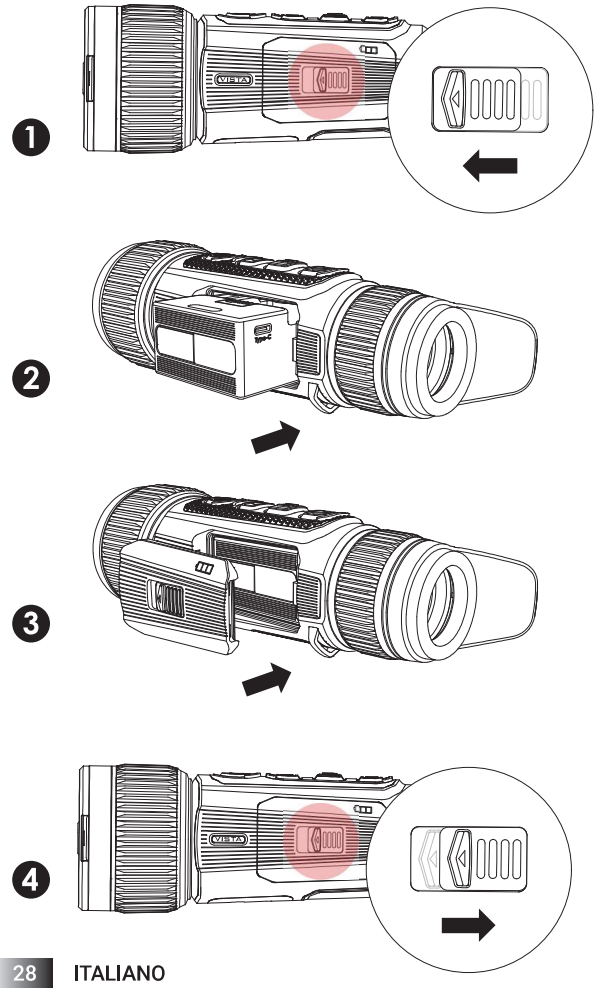

Descrizioni dei pulsanti
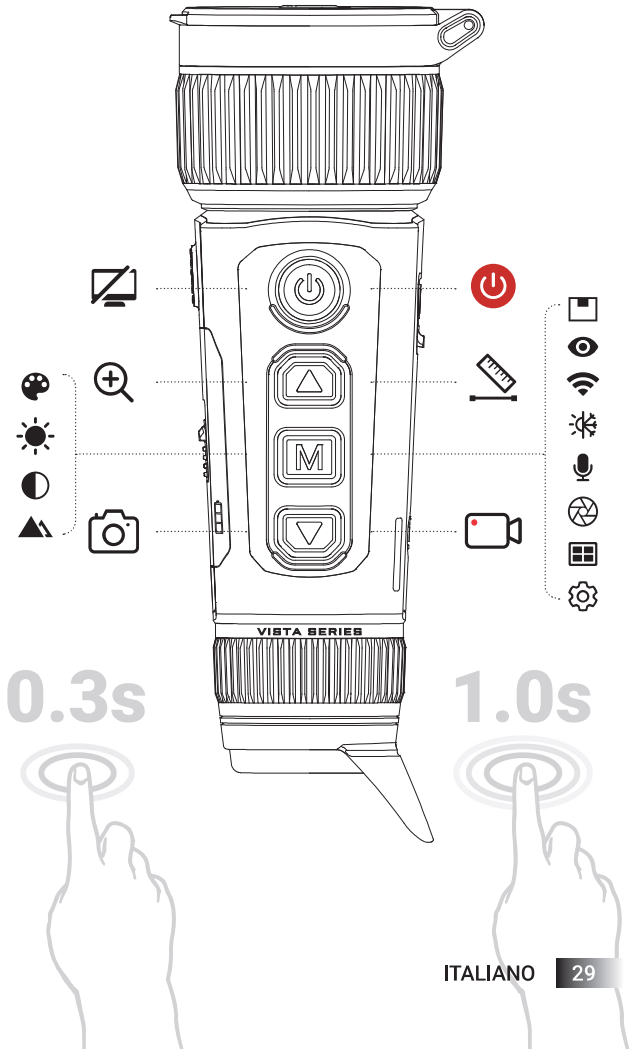
VISTA S50R / VISTA H50R / VISTA H35R