Descrizioni dei pulsanti

VISTA H35/VISTA H50

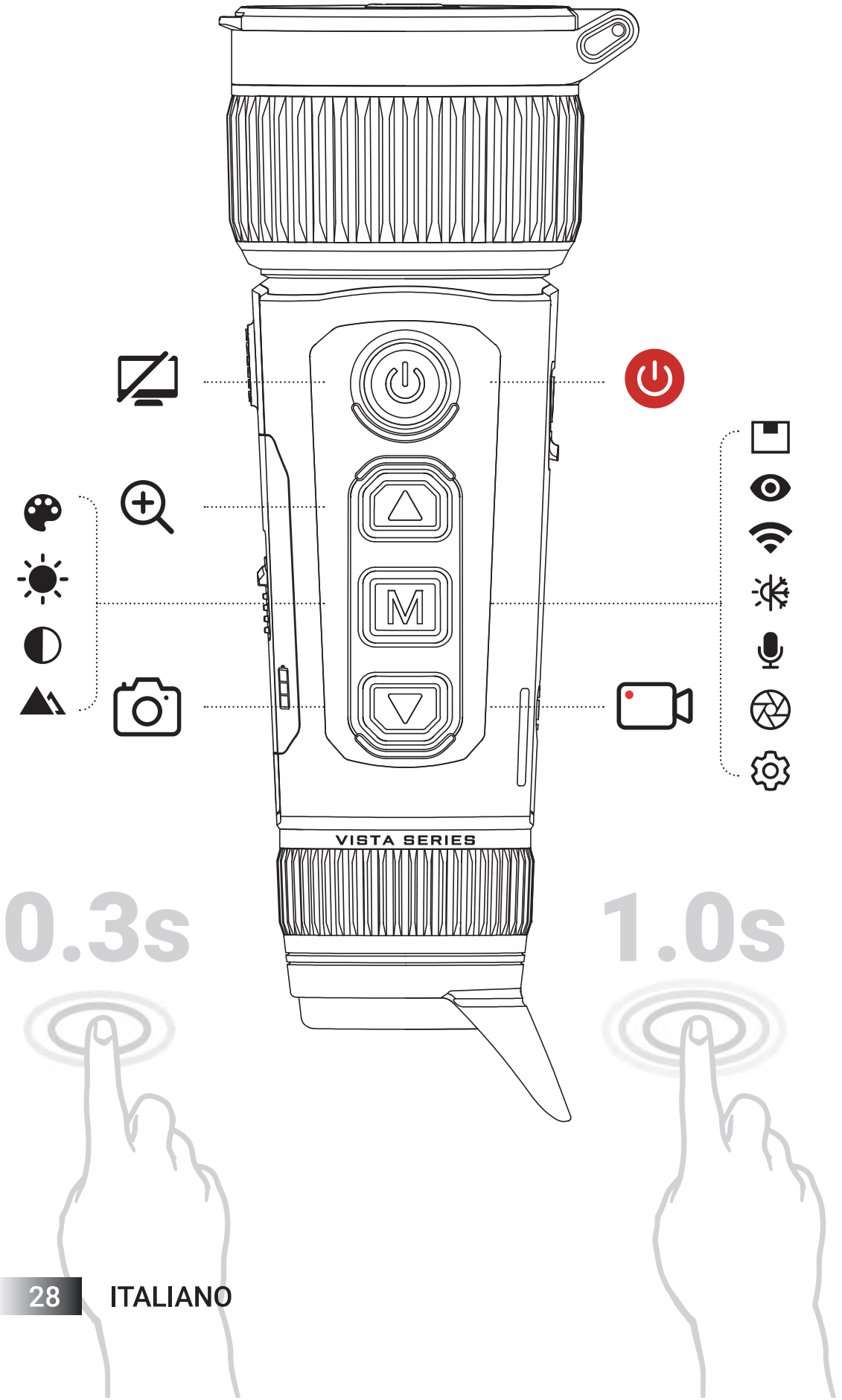

Descrizioni dei pulsanti

Menu di scelta rapida

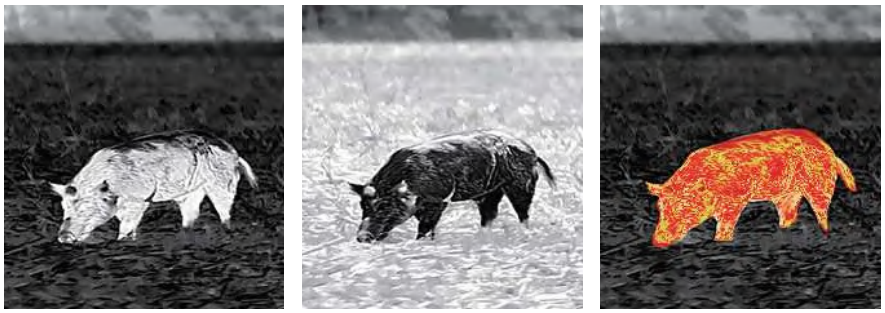

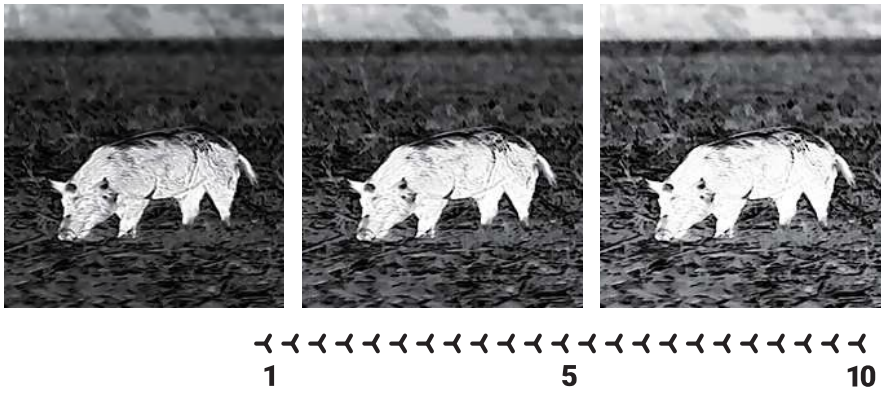

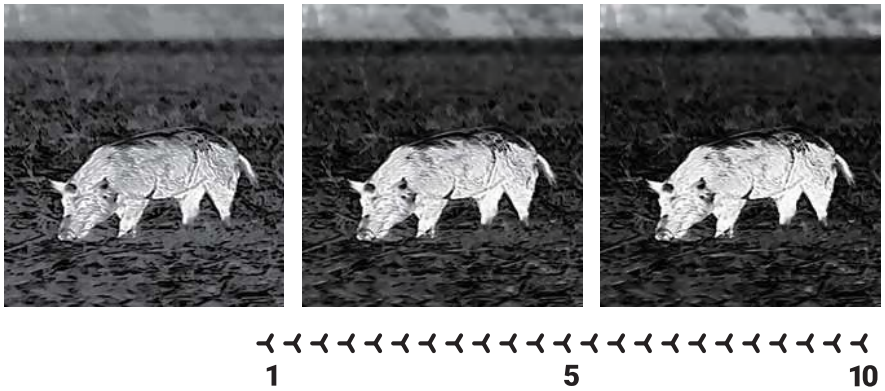

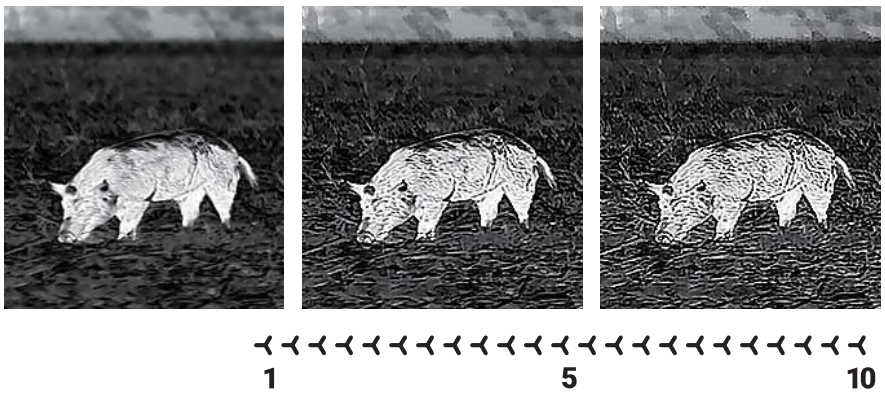

Menu principale

Mostra **Nascondere**

App

NOCPIX

Download on the App Store

GET IT ON Google Play

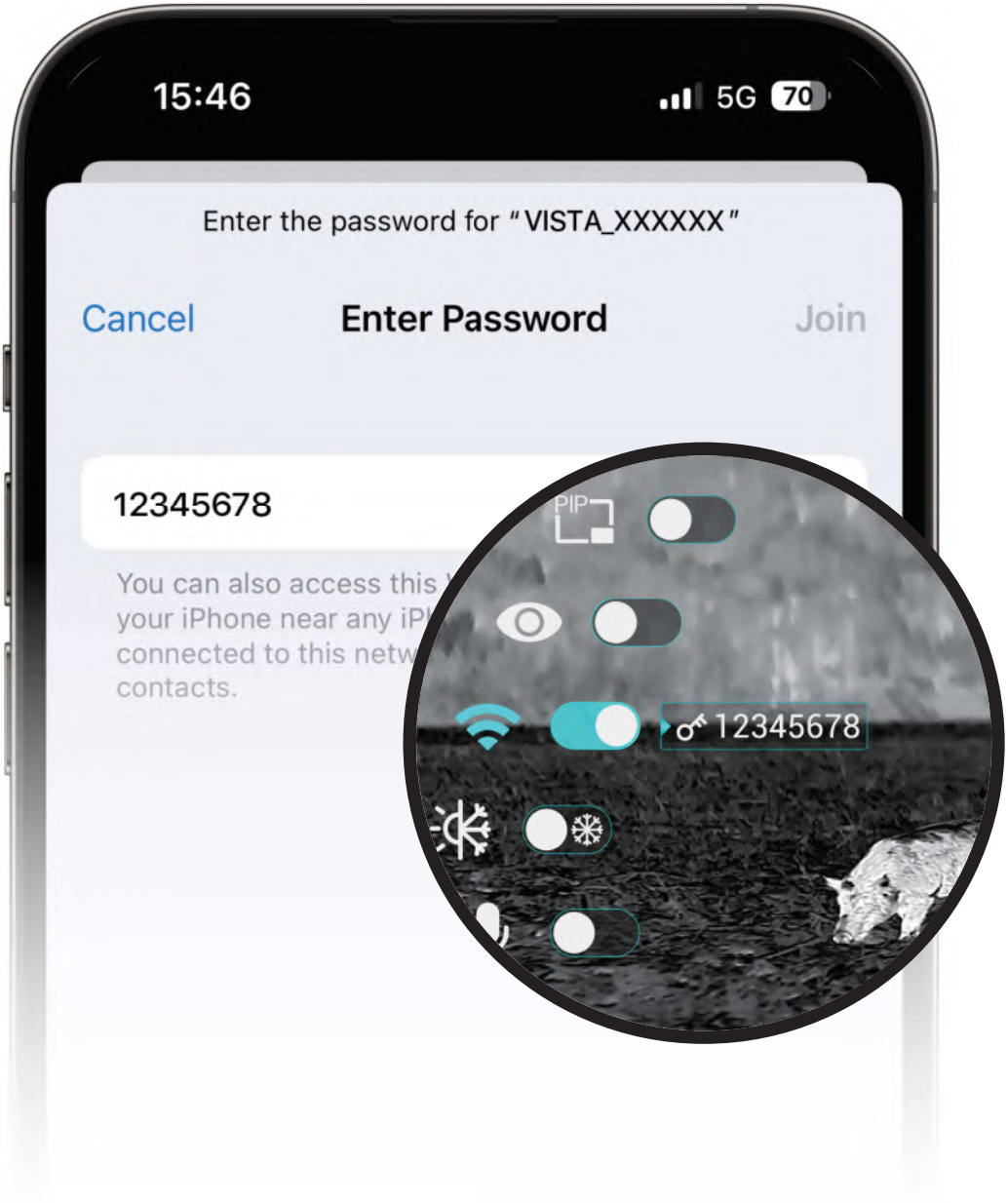

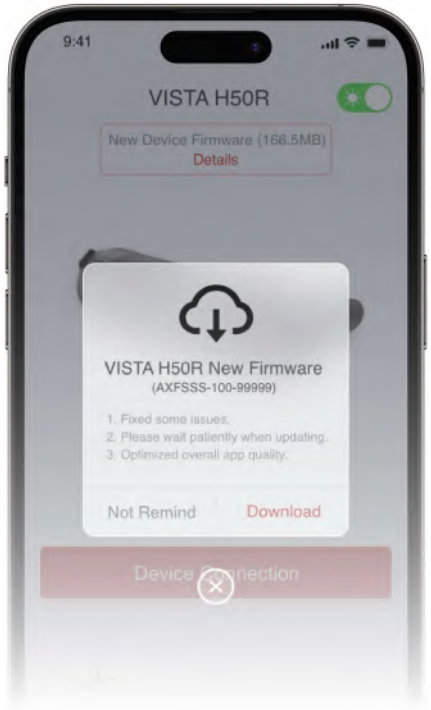

Aggiornamento del firmware

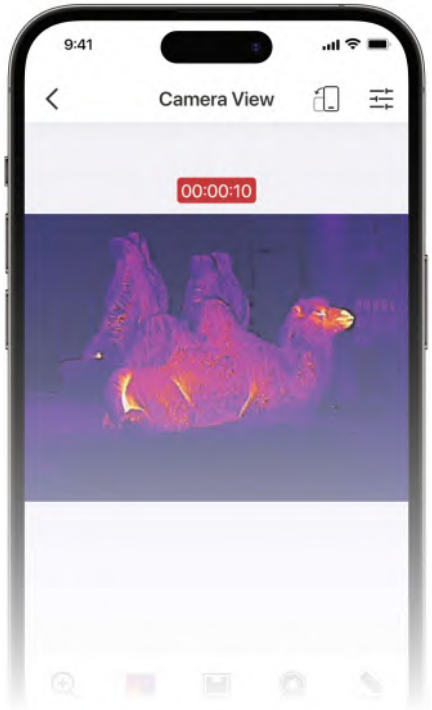

Trasmissione delle immagini in tempo reale

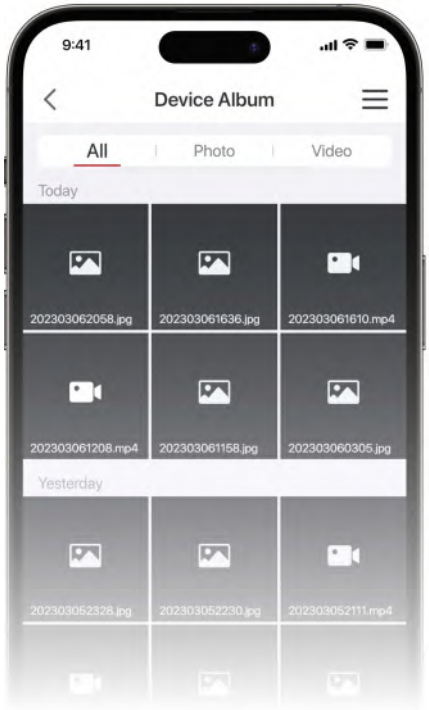

File del dispositivo

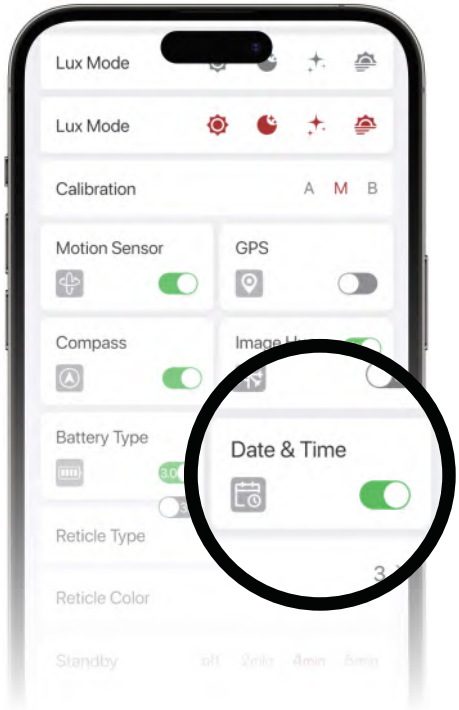

Calibrazione di data e ora

Specifiche

Modello	VISTA H35	VISTA H50
Sensore termico, Pixels	640×512,12μm	
NETD, mK	≤15	
Frequenza deifotogrammi, Hz	60	
Lente dell'obiettivo, mm	35 F0.9	50 F0.9
Campo visivo,°/m a 100 m	12.5×10.0/ 22×18	8.8×7.0/ 15×12
Ingrandimento,x	3~28	4~40
Campo di Rilevamento,m(Dimensione delbersaglio: 1.7 m x 0.5m, P(n)= 99%)	1800	2600
Distanza interoculare, mm	25	
Diametro della Pupilla d'uscita, mm	8	
Diottria, D	-4 ~ +6	
Display	AMOLED 2560×2560	
Batteria	Batteria sostituibile agli ioni di litio IBP-7/ 4400 mAh	
Durata della batteriamassima (t=22°C), h	5.5	
microfono	Supporta	
Quantità di memoriaincorporata, GB	64	
Grado di protezione IP	IP67	
Temperatura diFunzionamento, °C	-20 ~ +50	
Peso, g (con batteria)	610	630
Dimensione, mm	184×61×71	190×67×79

Modello	VISTA H35R	VISTA H50R
Sensore termico, Pixels	640×512,12μm	
NETD, mK	≤15	
Frequenza deifotogrammi, Hz	60	
Lente dell'obiettivo, mm	35 F0.9	50 F0.9
Campo visivo,°/m a 100 m	12.5×10.0/ 22×18	8.8×7.0/ 15×12
Ingrandimento,x	3~28	4~40
Campo di Rilevamento,m(Dimensione delbersaglio: 1.7 m x 0.5m, P(n)= 99%)	1800	2600
Distanza interoculare, mm	25	
Diametro della Pupilla d'uscita, mm	8	
Diottria, D	-4 ~ +6	
Display	AMOLED 2560×2560	
Batteria	Batteria sostituibile agli ioni di litio IBP-7/ 4400 mAh	
Durata della batteriamassima (t=22°C), h	5.5	
Classe di sicurezza per laser	Class 1	
Distanza massima del telemetro, m	1200	
microfono	Supporta	
Quantità di memoriaincorporata, GB	64	
Grado di protezione IP	IP67	
Temperatura diFunzionamento, °C	-20 ~ +50	
Peso, g (con batteria)	640	650
Dimensione, mm	190×67×79	194×70×82

Ottieni maggiori informazioni

Sito web:
www.nocpix.com

Manuale d'uso

Facebook

Instagram

YouTube

Accessoires

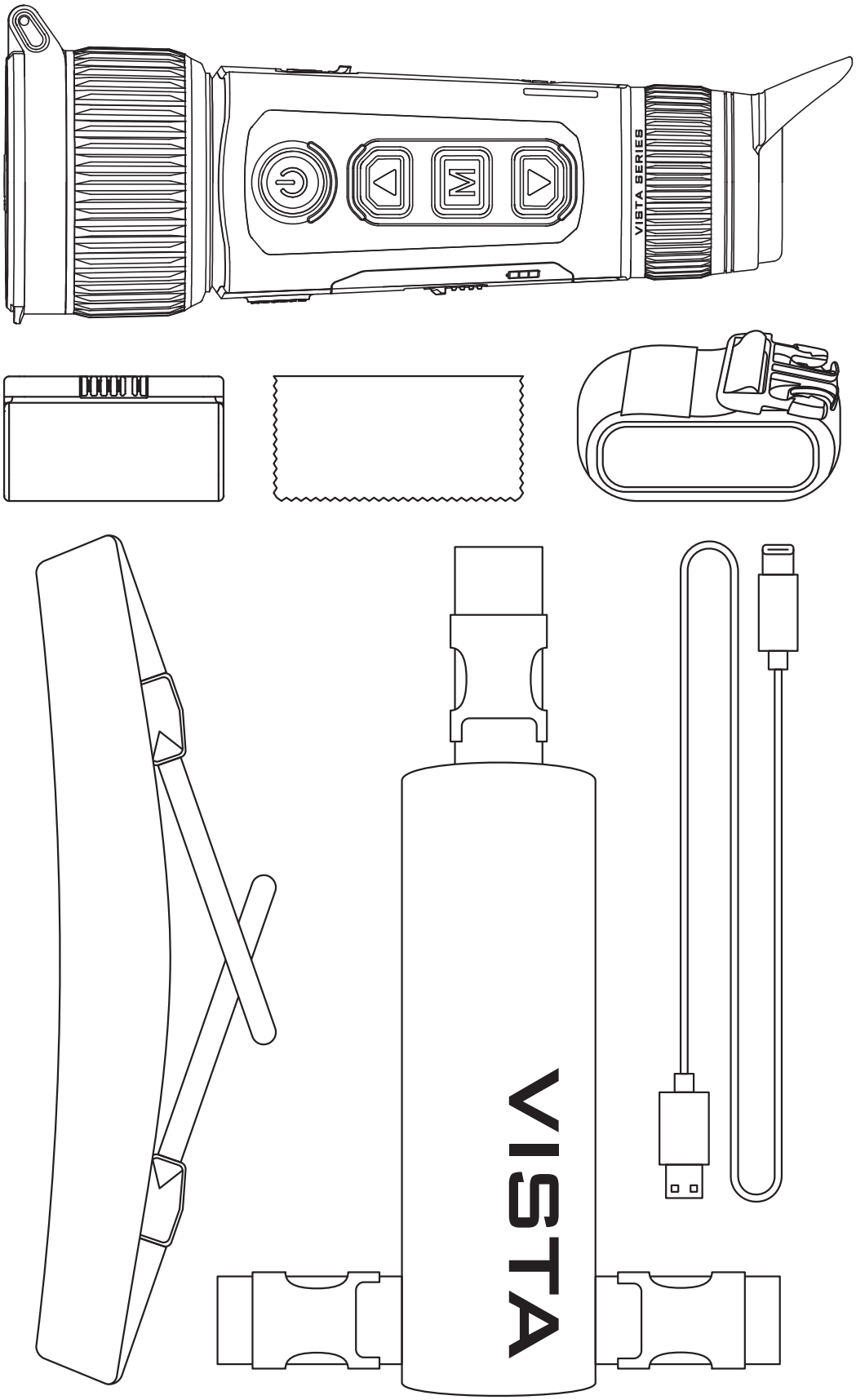

Installation de la batterie

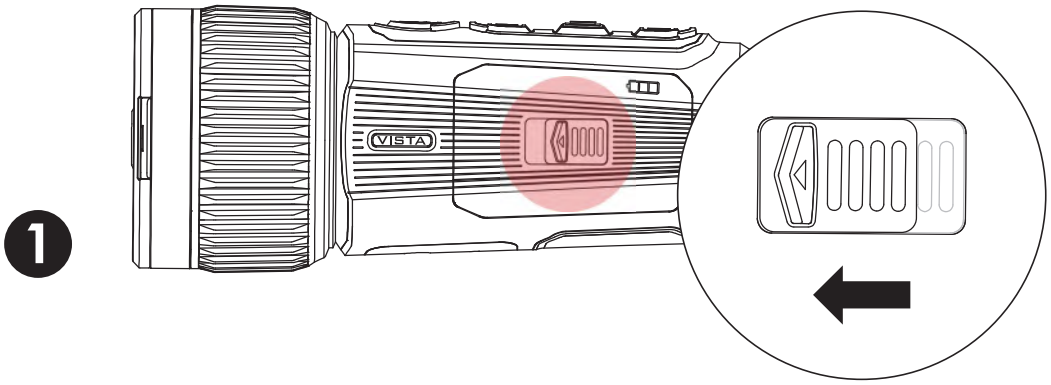

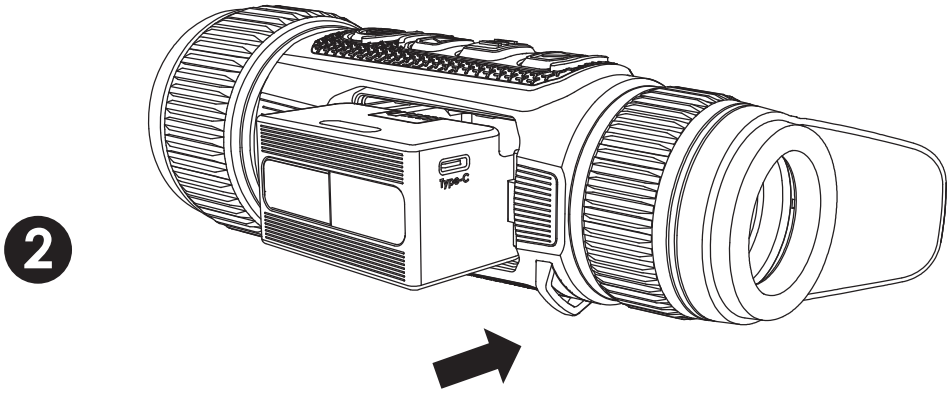

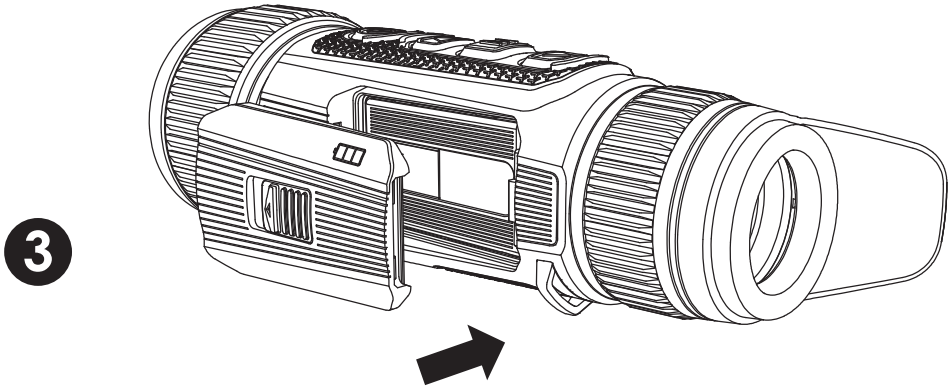

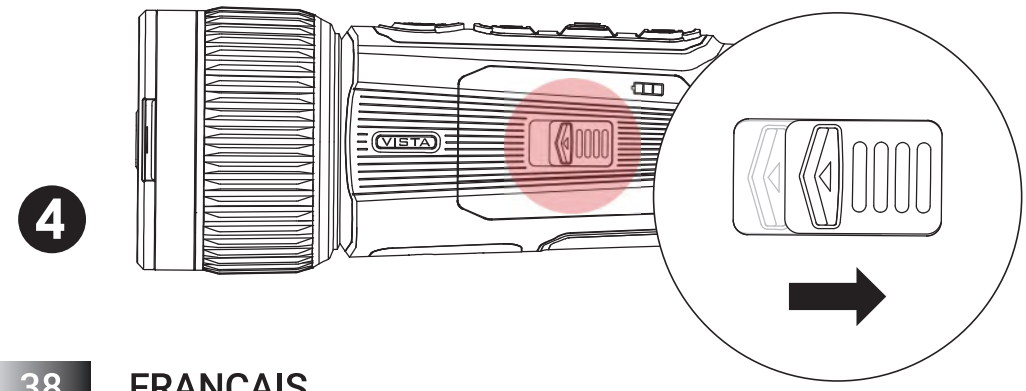

Description des boutons

VISTA H35R/VISTA H50R

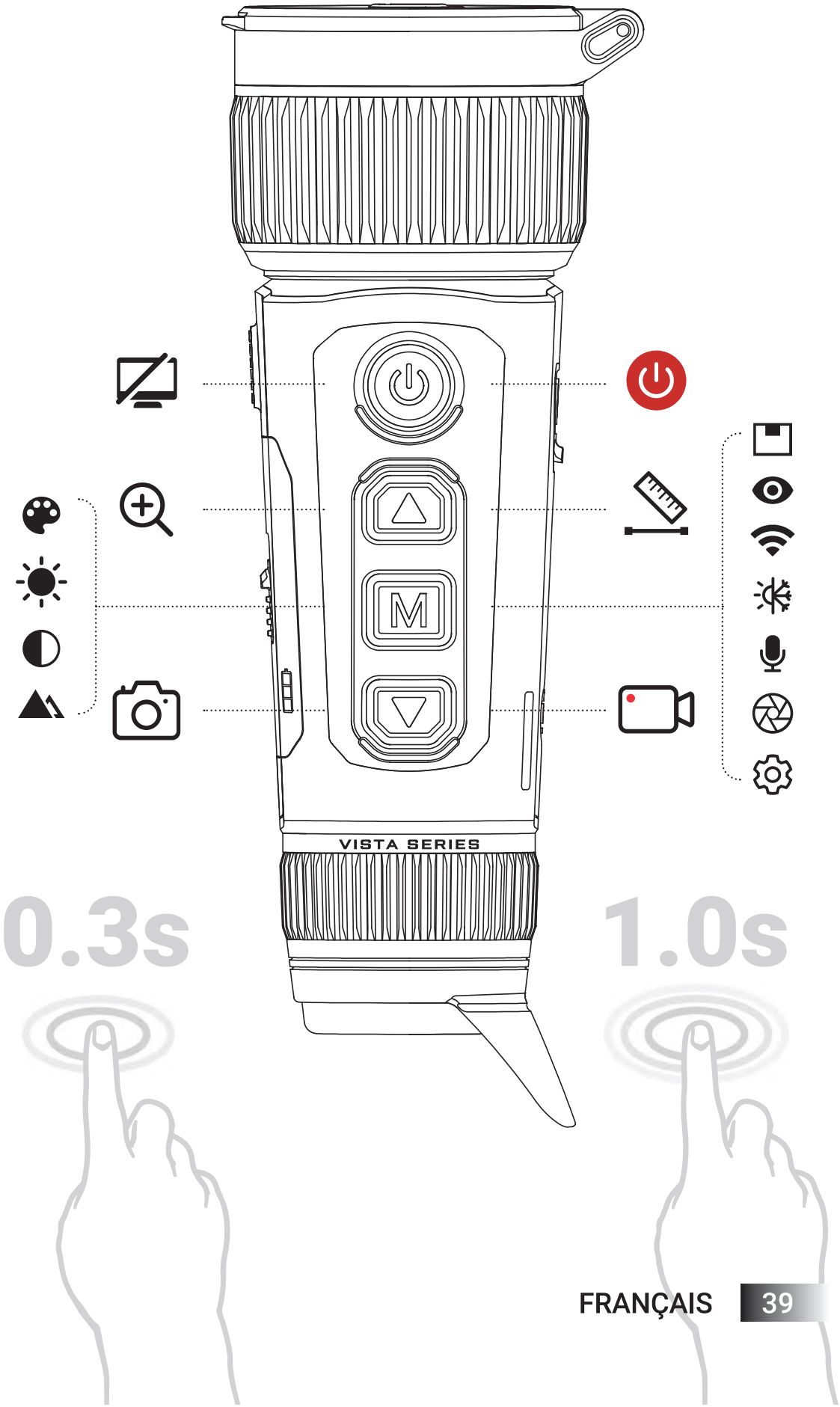

Description des boutons

VISTA H35/VISTA H50

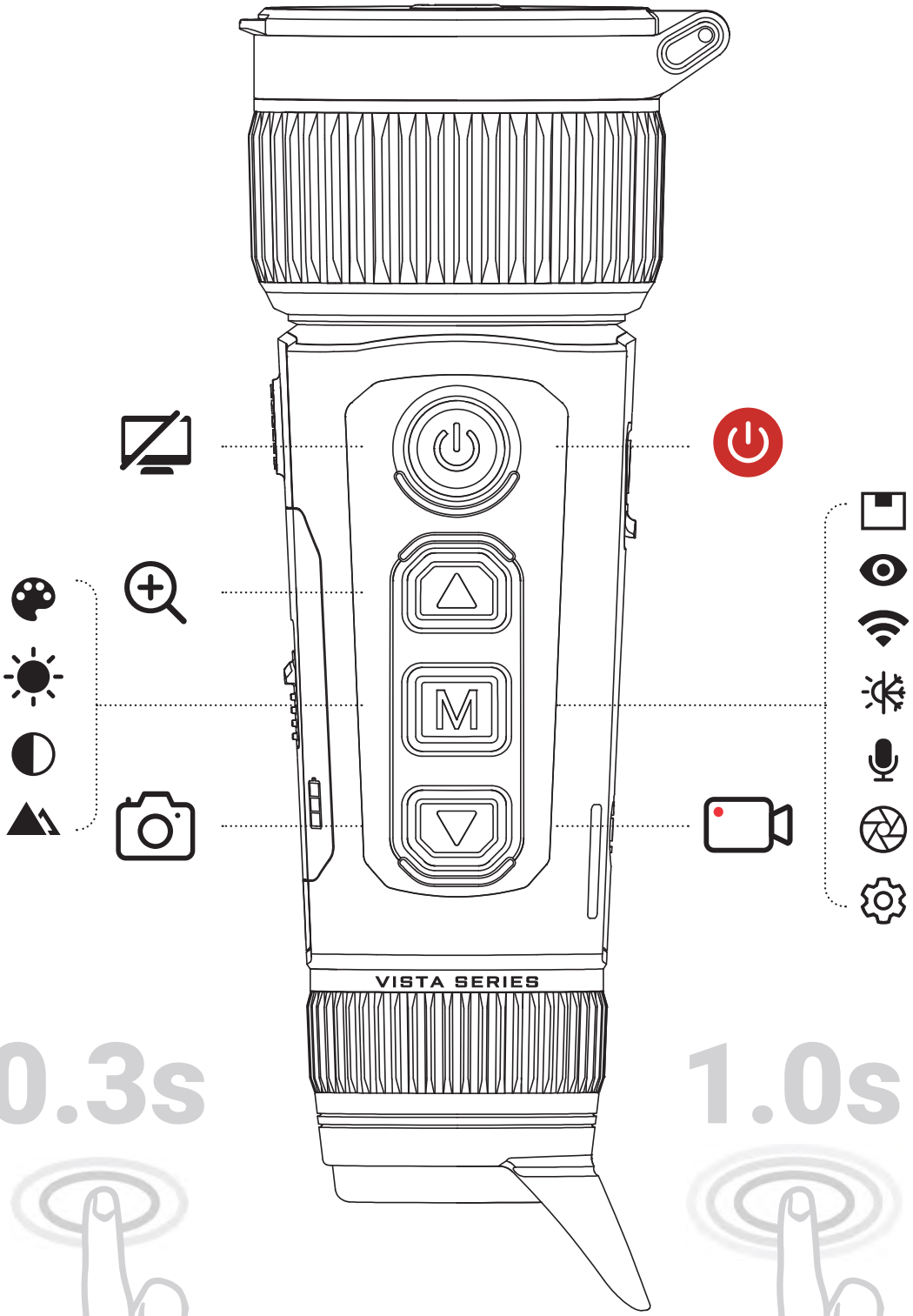

Description des boutons

Menu des raccourcis

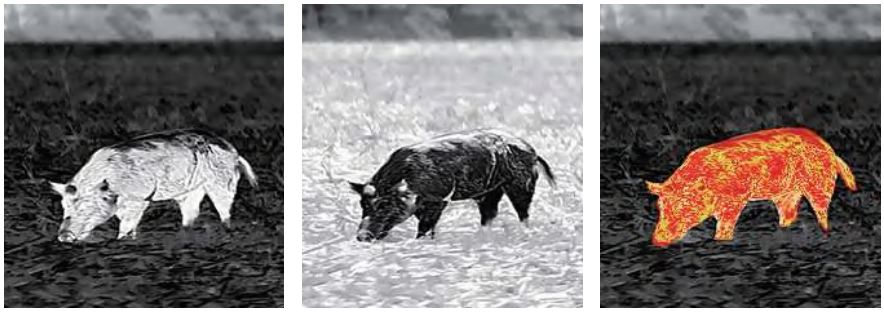

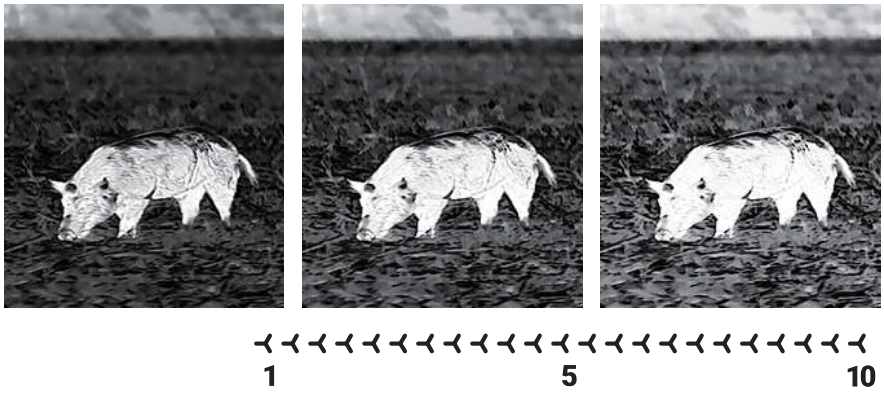

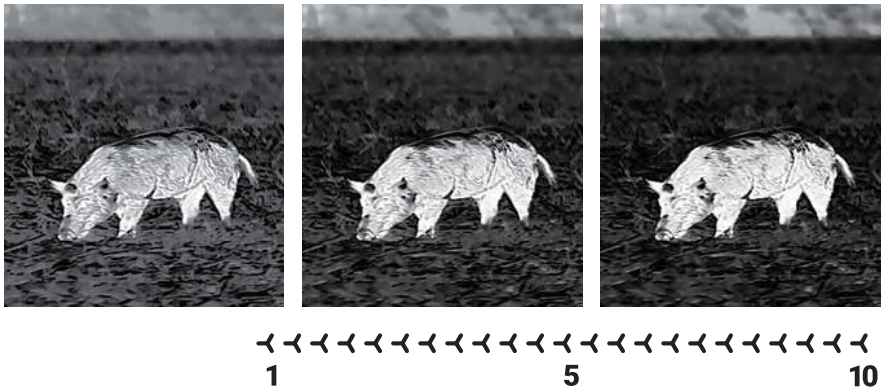

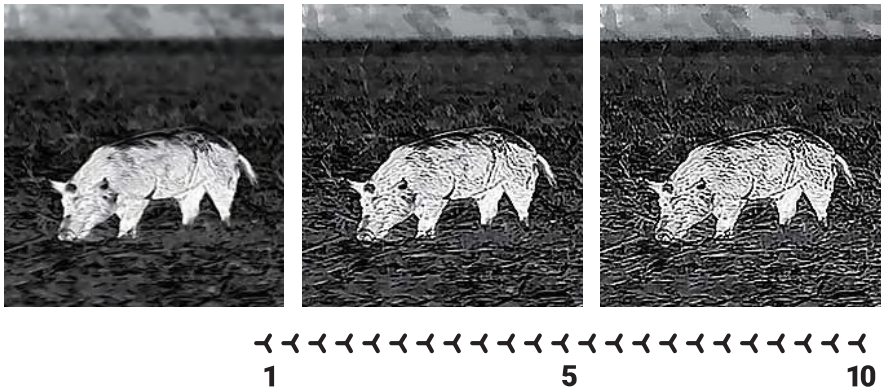

Menu principal

Afficher **Masquer**

App

NOCPIX

Download on the App Store

GET IT ON Google Play

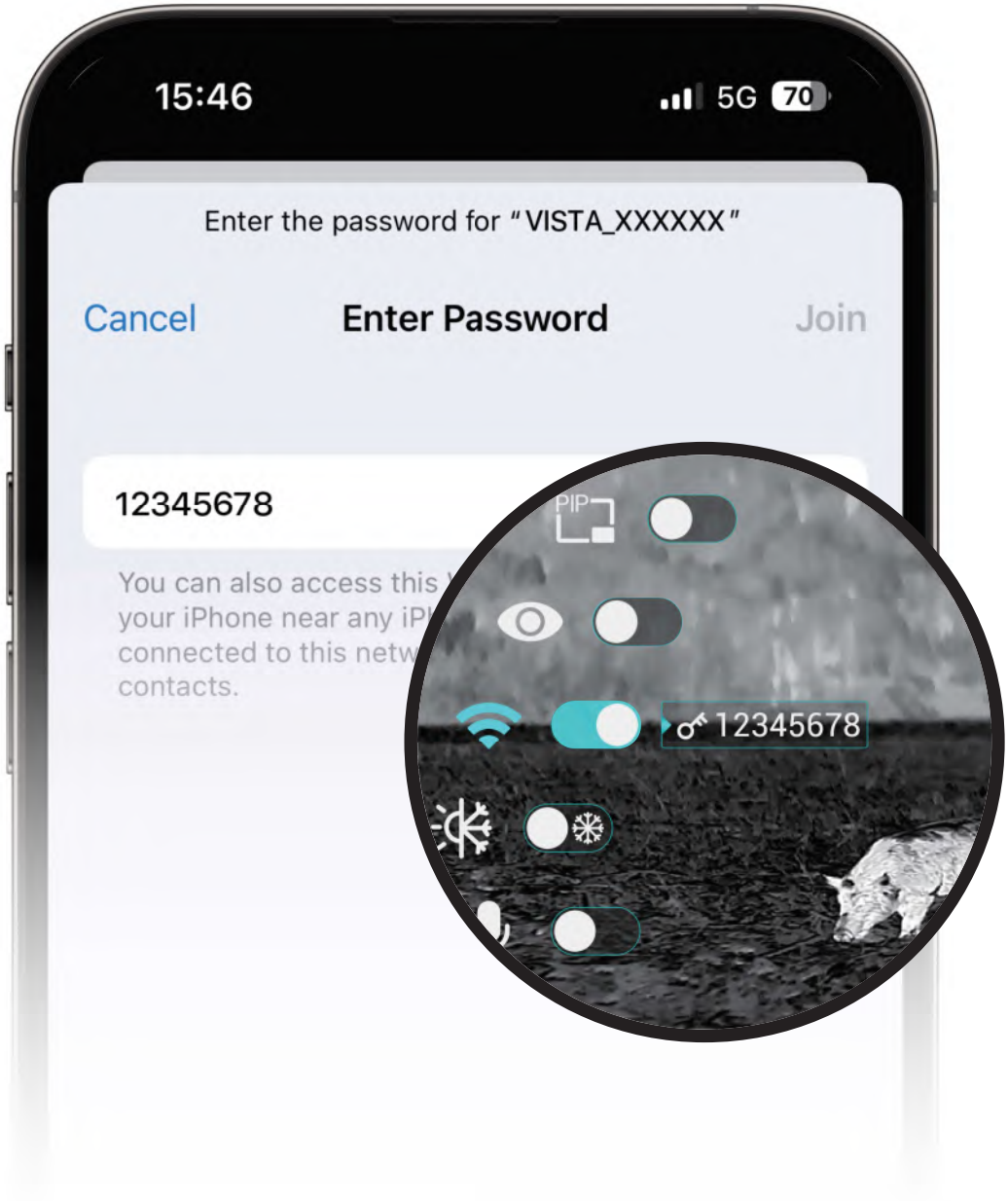

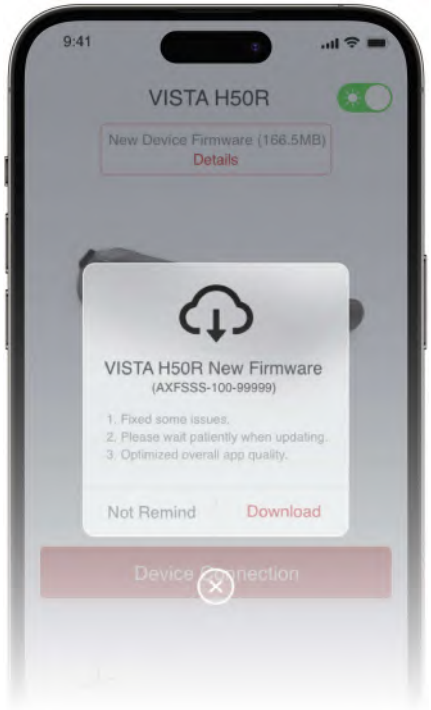

Mise à jour du firmware

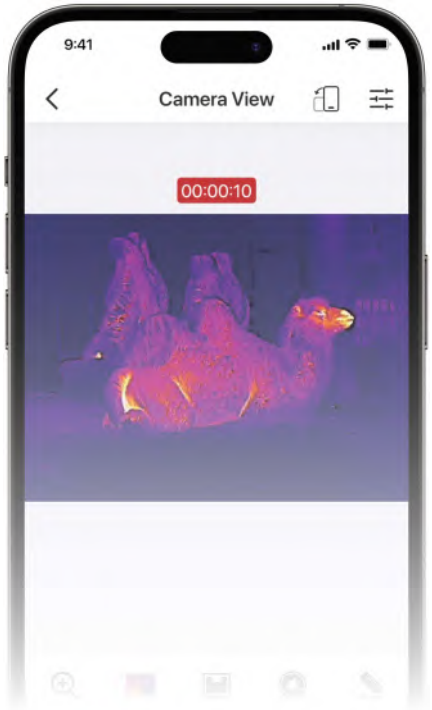

Transmission d'images en temps réel

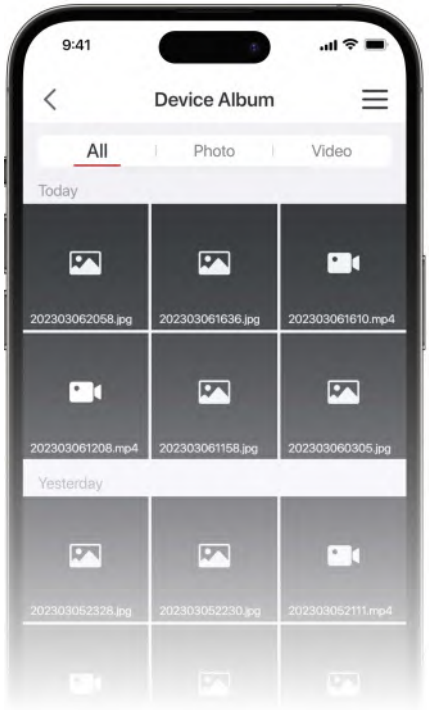

Fichier de périphérique

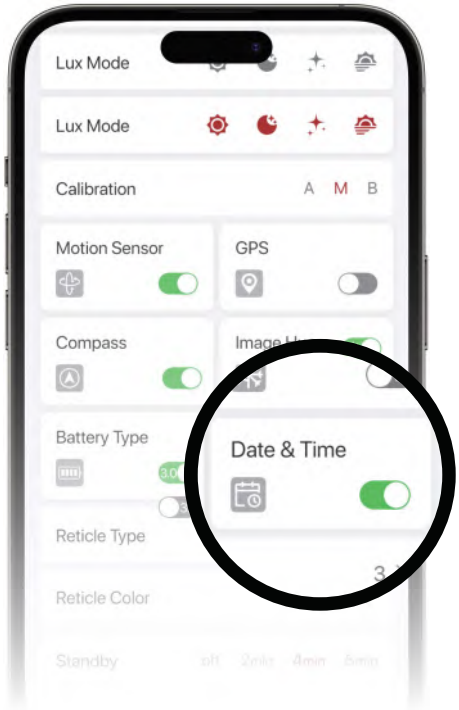

Calibrage de la date et de l'heure

Spécifications

Modèle	VISTA H35	VISTA H50
Capteur thermique, Pixels	640×512,12μm	
NETD, mK	≤15	
Fréquence desframes, Hz	60	
Objectif principal, mm	35 F0.9	50 F0.9
Champ de vision,°/m à100m	12.5×10.0/ 22×18	8.8×7.0/ 15×12
Grossissement, x	3~28	4~40
Portée de détection,m (taille de la cible: 1.7 m x 0.5 m, P(n) =99%)	1800	2600
Distanza interoculare. mm	25	
Diamètre de la pupille de sortie. mm	8	
Dioptrie, D	-4 ~ +6	
Écran	AMOLED 2560×2560	
Type de batterie	Batterie Li-ion remplaçable IBP-7/4400 mAh	
Autonomie maximale dela batterie (t=22°C), h	5.5	
Microphone	Support	
Capacité de la mémoireintégrée, Go	64	
Indice IP	IP67	
lempérature defonctionnement. °C	-20 ~ +50	
Poids, g (avec batterie)	610	630
Dimensions, mm	184×61×71	190×67×79

Modèle	VISTA H35R	VISTA H50R
Capteur thermique, Pixels	640×512,12μm	
NETD, mK	≤15	
Fréquence desframes, Hz	60	
Objectif principal, mm	35 F0.9	50 F0.9
Champ de vision,°/m à100m	12.5×10.0/ 22×18	8.8×7.0/ 15×12
Grossissement, x	3~28	4~40
Portée de détection,m (taille de la cible: 1.7 m x 0.5 m, P(n) =99%)	1800	2600
Distanza interoculare. mm	25	
Diamètre de la pupille de sortie. mm	8	
Dioptrie, D	-4 ~ +6	
Écran	AMOLED 2560×2560	
Type de batterie	Batterie Li-ion remplaçable IBP-7/4400 mAh	
Autonomie maximale dela batterie (t=22°C), h	5.5	
Classe de sécurité pour le laser	Class 1	
Distance maximale du télémètre, m	1200	
Microphone	Support	
Capacité de la mémoireintégrée, Go	64	
Indice IP	IP67	
lempérature defonctionnement. °C	-20 ~ +50	
Poids, g (avec batterie)	640	650
Dimensions, mm	190×67×79	194×70×82

Obtenir plus d'informations

Site web:
www.nocpix.com

Manuel de l'Utilisateur

Facebook

Instagram

YouTube

Accesorios

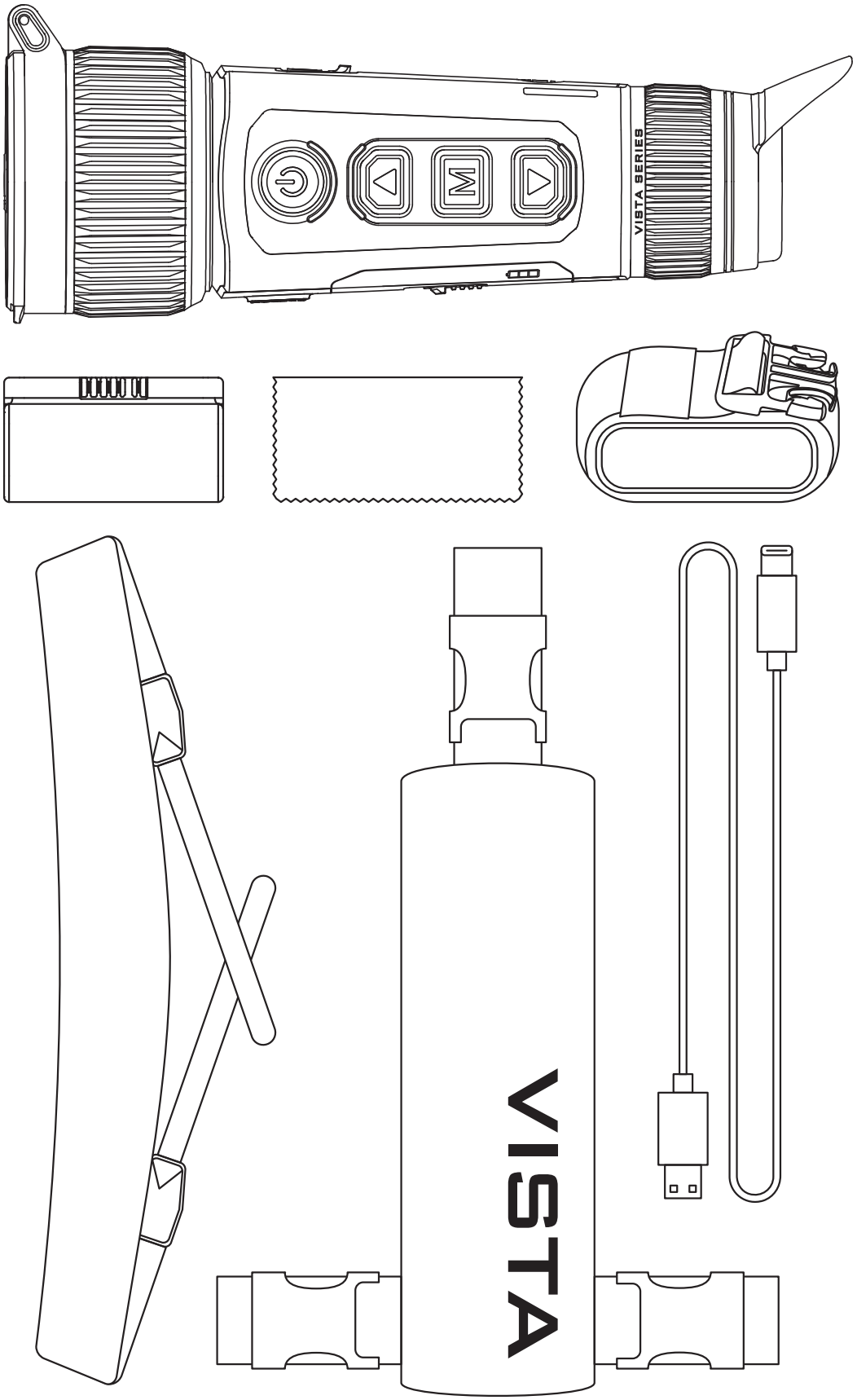

Instalación de la batería

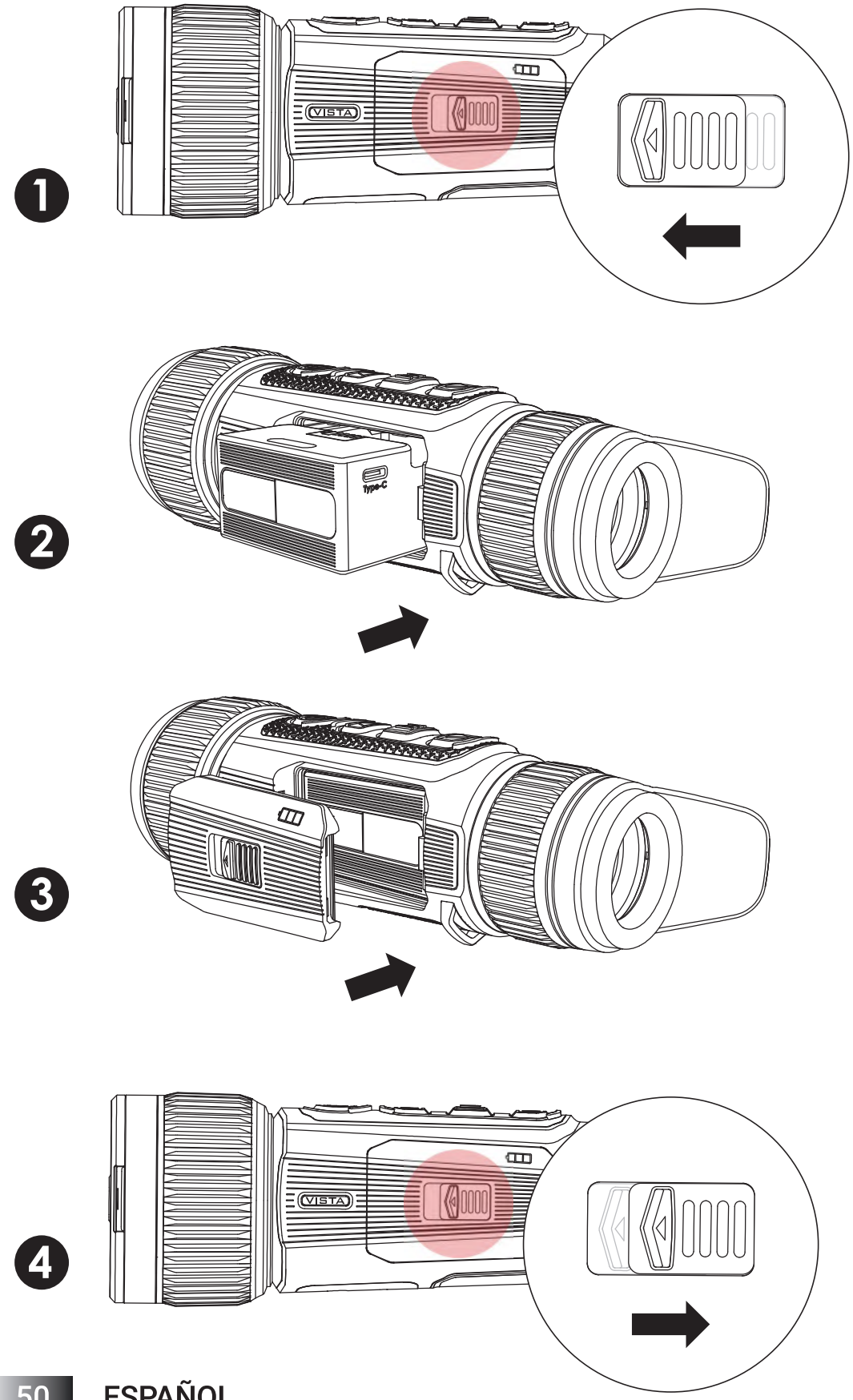

Descripciones de botones

VISTA H35R/VISTA H50R

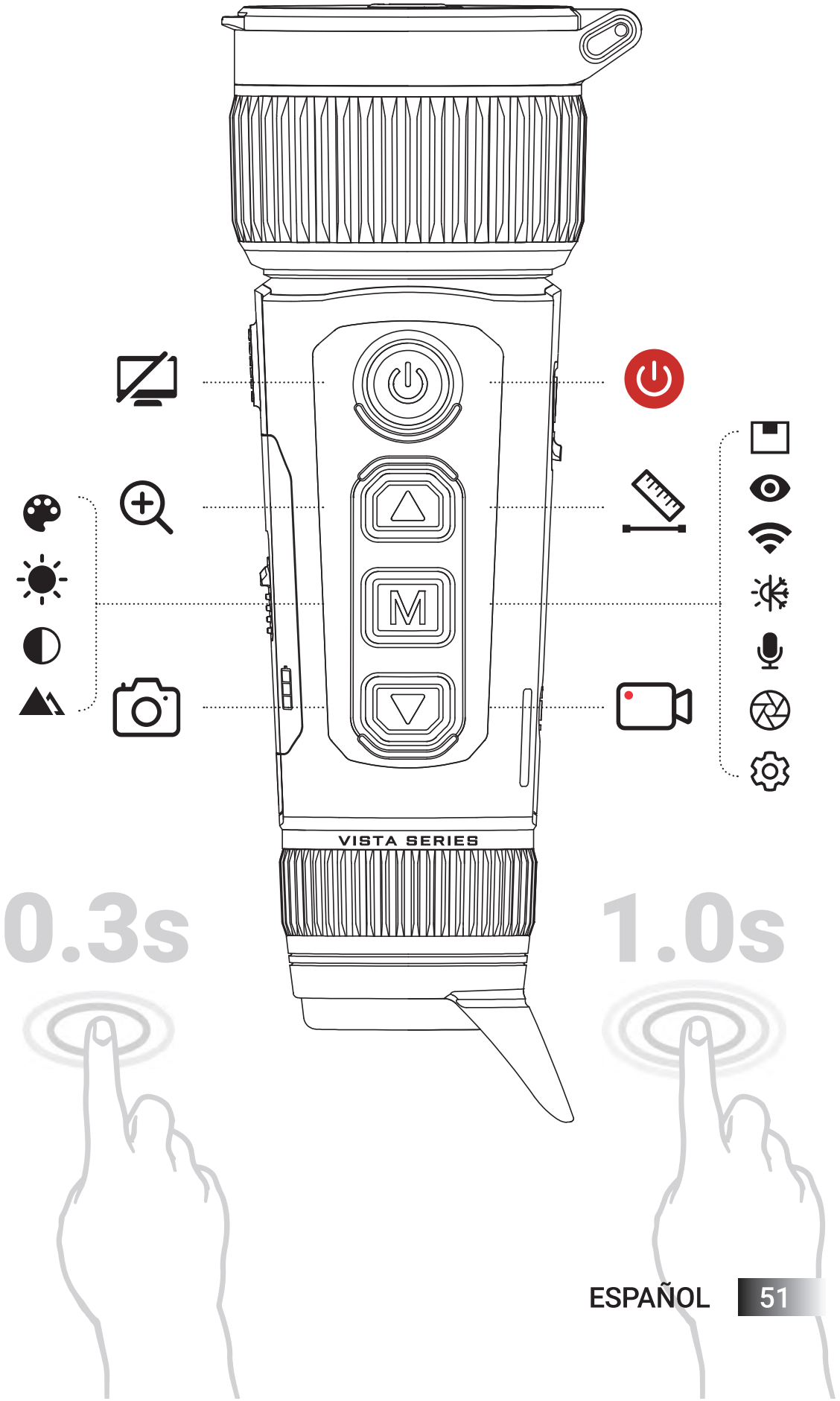

Descripciones de botones

VISTA H35/VISTA H50

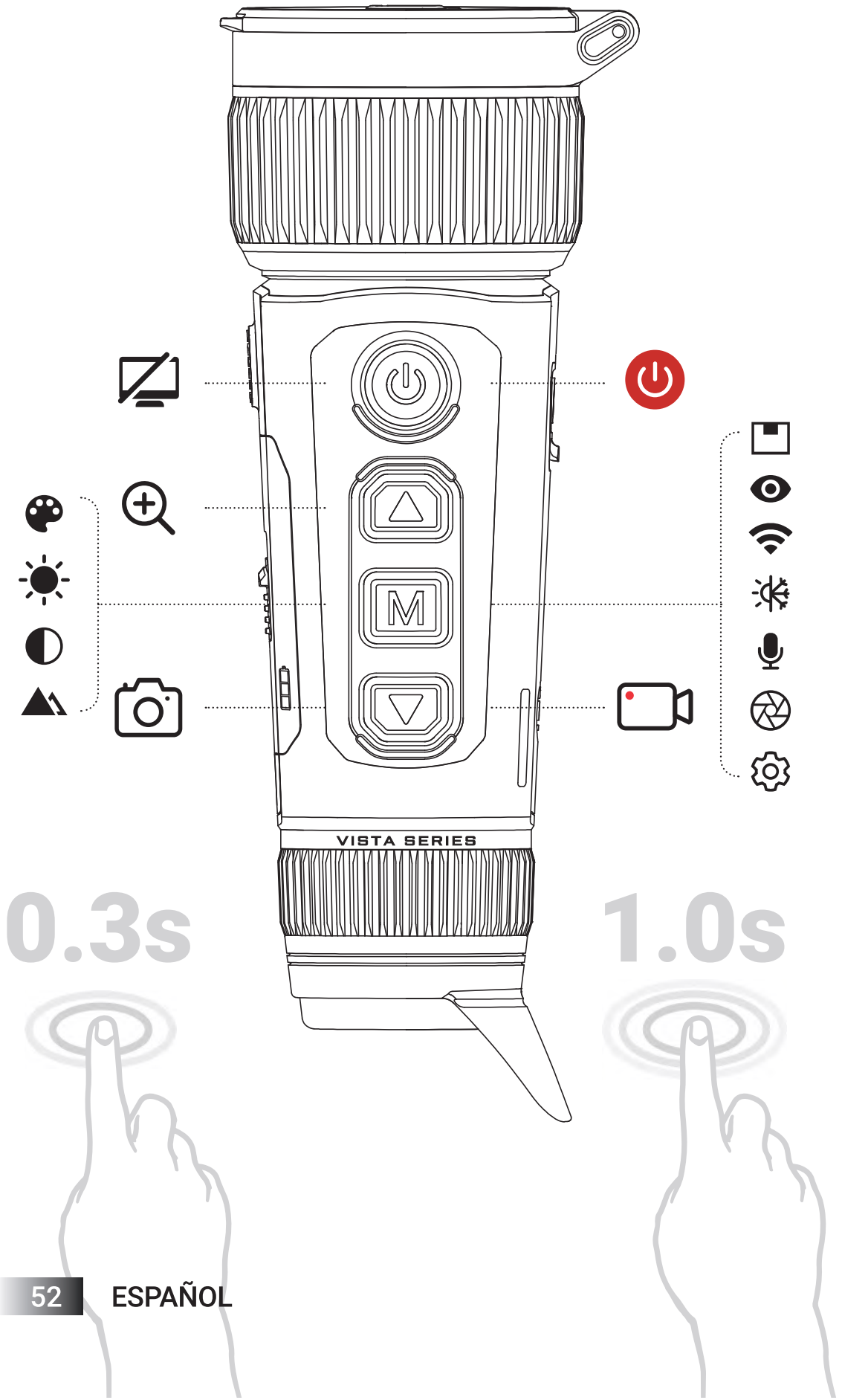

Descripciones de botones

Menú breve

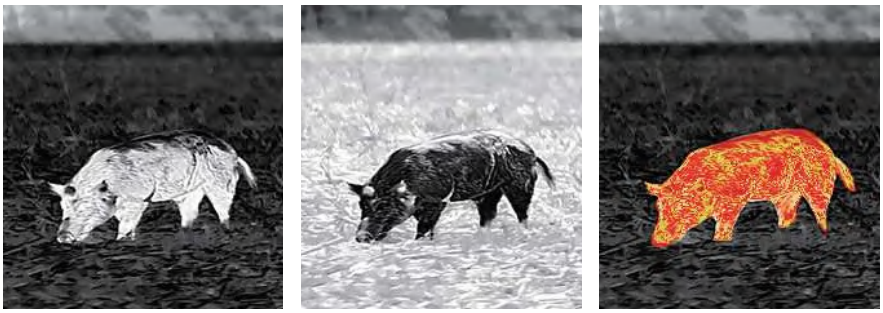

1 5 10

1 5 10

1 5 10

Menú principal

Mostrar **Ocultar**

App

NOCPIX

Download on the App Store

GET IT ON Google Play

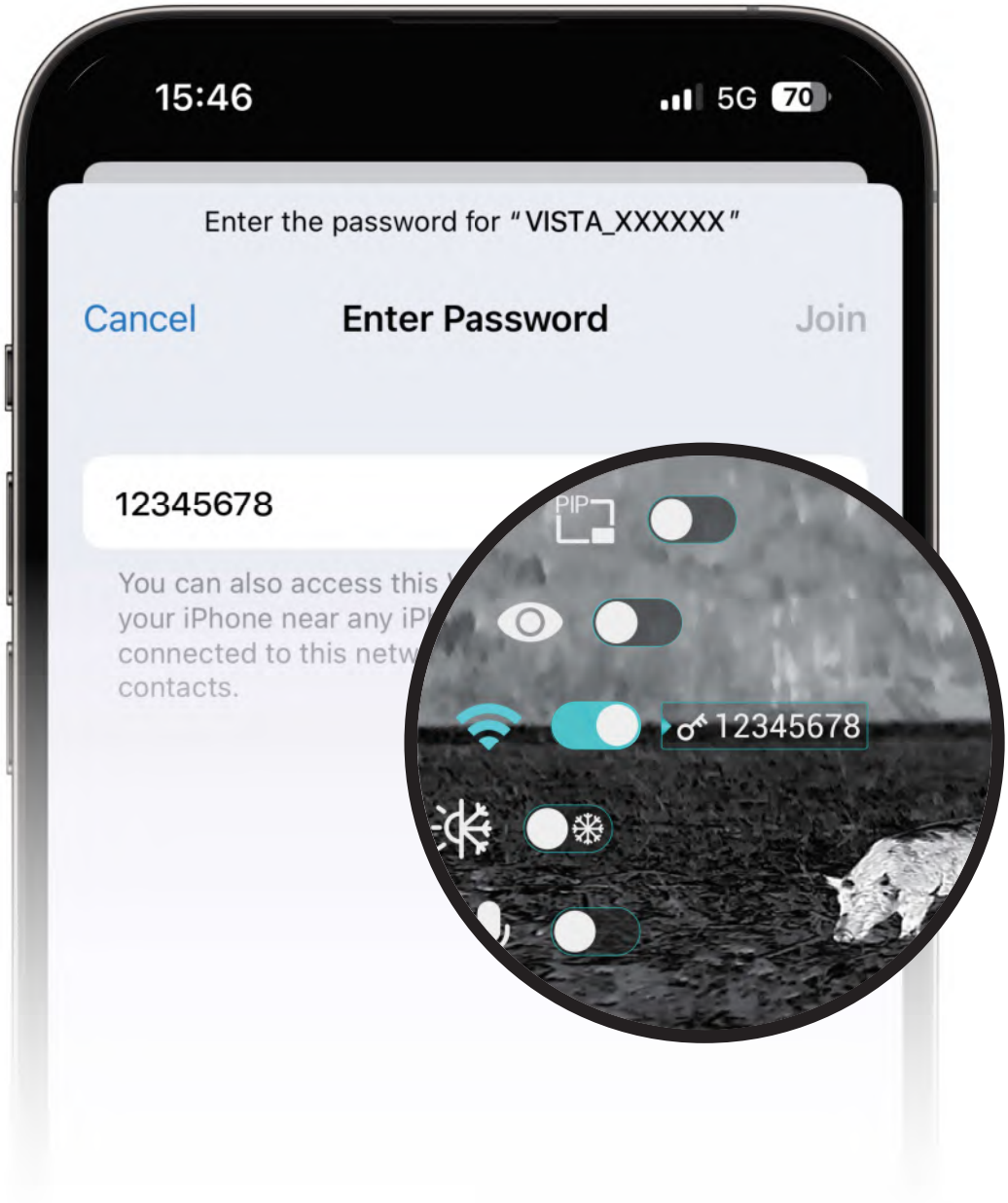

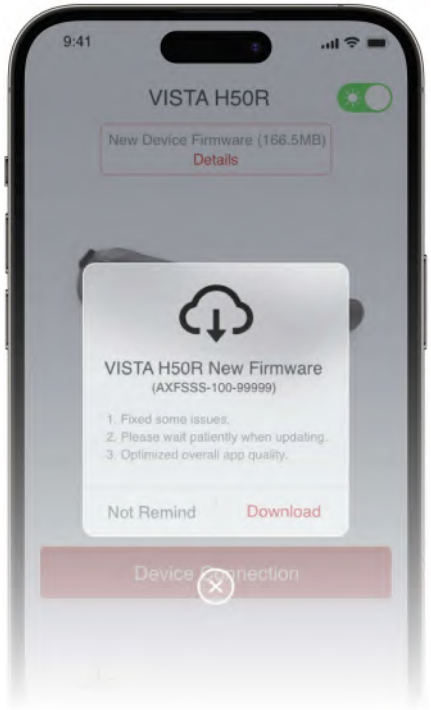

Actualización de firmware

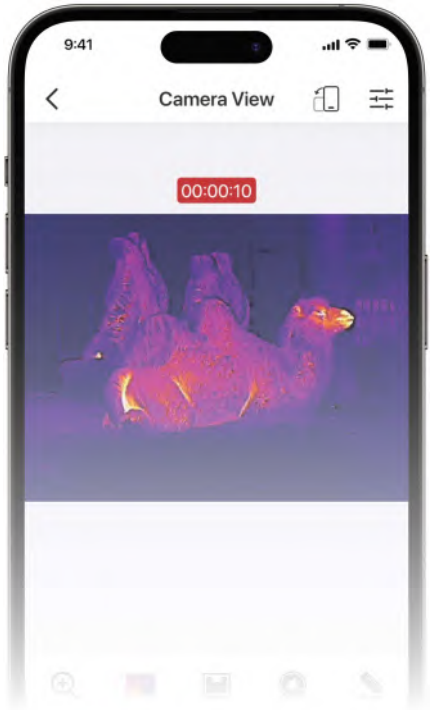

Transmisión de imágenes en tiempo real

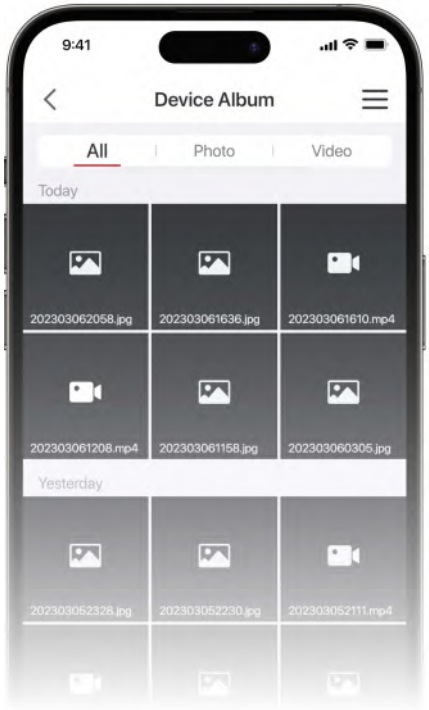

Archivo de dispositivo

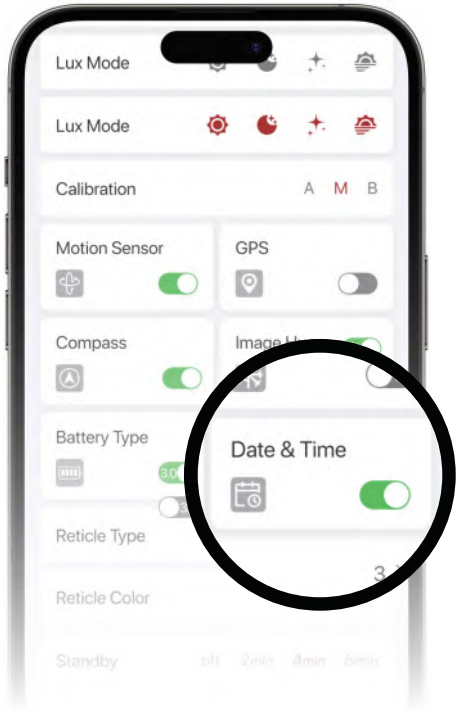

Calibración de fecha y hora

Especificaciones

Modelo	VISTA H35	VISTA H50
Sensor termal, Pixels	640×512,12μm	
NETD, mK	≤15	
Velocidad de fotogramas, Hz	60	
Lente Objetiva, mm	35 F0.9	50 F0.9
Campo de visión, °/m a 100 m	12.5×10.0/ 22×18	8.8×7.0/ 15×12
Magnificación, x	3~28	4~40
Rango de detección, m(Tamano objetivo: 1.7m x 0,5 m,P(n)=99%)	1800	2600
Alivio ocular, mm	25	
Diámetro de la pupila de salida, mm	8	
Dioptrias, D	-4 ~ +6	
Pantalla	AMOLED 2560×2560	
Bateria	Paquete de baterías de iones de litio reemplazables IBP-7/4400 mAh	
Vida útil máxima de labatera (t =22°C), h	5.5	
micrófono	Soporte	
Cantidad de memoria incorporada, GB	64	
Clasificación IP	IP67	
lemperatura defuncionamiento. °C	-20 ~ +50	
Peso, g (con batería)	610	630
Dimensión, mm	184×61×71	190×67×79

Modelo	VISTA H35R	VISTA H50R
Sensor termal, Pixels	640×512,12μm	
NETD, mK	≤15	
Velocidad de fotogramas, Hz	60	
Lente Objetiva, mm	35 F0.9	50 F0.9
Campo de visión, °/m a 100 m	12.5×10.0/ 22×18	8.8×7.0/ 15×12
Magnificación, x	3~28	4~40
Rango de detección, m(Tamano objetivo: 1.7m x 0,5 m,P(n)=99%)	1800	2600
Alivio ocular, mm	25	
Diámetro de la pupila de salida, mm	8	
Dioptrias, D	-4 ~ +6	
Pantalla	AMOLED 2560×2560	
Bateria	Paquete de baterías de iones de litio reemplazables IBP-7/4400 mAh	
Vida útil máxima de labatera (t =22°C), h	5.5	
Clase de seguridad para láser.	Class 1	
Distancia máxima del telémetro, m	1200	
micrófono	Soporte	
Cantidad de memoria incorporada, GB	64	
Clasificación IP	IP67	
lemperatura defuncionamiento. °C	-20 ~ +50	
Peso, g (con batería)	640	650
Dimensión, mm	190×67×79	194×70×82

Obtener mas informacion

Sitio web:
www.nocpix.com

Manual de usuario

Facebook

Instagram

YouTube

FCC ID:2BHFB-3C-00

Labeling requirements.
This device complies with part 15 of the FCC Rules. Operation is subject to the following two conditions: (1) This device may not cause harmful interference, and (2) this device must accept any interference received, including interference that may cause undesired operation.

Information to user.
Any Changes or modifications not expressly approved by the party responsible for compliance could void the user's authority to operate the equipment.

EMC Class B
Note: This equipment has been tested and found to comply with the limits for a Class B digital device, pursuant to part 15 of the FCC Rules. These limits are designed to provide reasonable protection against harmful interference in a residential installation. This equipment generates uses and can radiate radio frequency energy and, if not installed and used in accordance with the instructions, may cause harmful interference to radio communications. However, there is no guarantee that interference will not occur in a particular installation. If this equipment does cause harmful interference to radio or television reception, which can be determined by turning the equipment off and on, the user is encouraged to try to correct the interference by one or more of the following measures:
-Reorient or relocate the receiving antenna.
-Increase the separation between the equipment and receiver.
-Connect the equipment into an outlet on a circuit different from that to which the receiver is connected.
-Consult the dealer or an experienced radio/TV technician for help.

Inlumen Technologies Co., Ltd.

Email: service@nocpix.com **Web:** www.nocpix.com

Add.: North 6F, Building B3, Hefei Software Park, NO.800 Wangjiang West Road, Hefei National High-tech Industry Development District, Anhui, China.