Certificate #7130.01

# FCC SAR Test Report

## FCC ID: 2BHFB-5028-00

| | | |
|---|---|---|
| **Project No.** | : | 2601H051 |
| **Equipment** | : | MINI2 Thermal Imaging Monocular |
| **Brand Name** | : | Nocpix |
| **Model Name** | : | H25 |
| **Date of Receipt** | : | Feb. 03, 2026 |
| **Date of Test** | : | Mar. 06, 2026 ~ Mar. 12, 2026 |
| **Issued Date** | : | Mar. 18, 2026 |
| **Test Sample** | : | Engineering Sample No.: SH92026020319 |
| **Standard(s)** | : | Please refer to page 2. |
| **Applicant** | : | Inlumen Technologies Co., Ltd. |
| **Address** | : | Room 806, A1, Phase 3, Innovation Industrial Park,High-tech Zone, Hefei City, Anhui Province, China. |
| **Manufacturer** | : | Inlumen Technologies Co., Ltd. |
| **Address** | : | Room 806, A1, Phase 3, Innovation Industrial Park,High-tech Zone, Hefei City, Anhui Province, China. |

The above equipment has been tested and found compliance with the requirement of the relative standards by BTL Inc. (Dongguan)

**Prepared by** : Dana Chen

Dana Chen

**Approved by** : Herbort Liu

Herbort Liu

No.3, Jinshagang 1st Road, Dalang, Dongguan, Guangdong People's Republic of China.
Tel: +86-769-8318-3000 Web: www.newbtl.com Service mail: btl_qa@newbtl.com

| | | |
|---|---|---|
| **Standard(s)** | : | **IEEE Std C95.1:2019** IEEE Standard for Safety Levels with Respect to Human Exposure to Electric, Magnetic, and Electromagnetic Fields, 0 kHz to 300 GHz<br><br>**IEEE Std 1528™-2013** IEEE Recommended Practice for Determining the Peak Spatial-Average Specific Absorption Rate (SAR) in the Human Head from Wireless Communications Devices: Measurement Techniques<br><br>**KDB865664 D01** SAR measurement 100 MHz to 6 GHz v01r04<br>**KDB447498 D01** General RF Exposure Guidance v06 |
| **Test Method** | : | **KDB865664 D02** SAR Reporting v01r02<br>**KDB248227 D01** 802. 11 Wi-Fi SAR v02r02 |

**Declaration**

**BTL** represents to the client that testing is done in accordance with standard procedures as applicable and that test instruments used has been calibrated with standards traceable to international standard(s) and/or national standard(s).

**BTL**'s reports apply only to the specific samples tested under conditions. It is manufacture's responsibility to ensure that additional production units of this model are manufactured with the identical electrical and mechanical components. BTL assumes no responsibility for the data provided by the customer, any statements, inferences or generalizations drawn by the customer or others from the reports issued by BTL.

The report must not be used by the client to claim product certification, approval, or endorsement by A2LA or any agency of the U.S. Government.

This report is the confidential property of the client. As a mutual protection to the clients, the public and ourselves, the test report shall not be reproduced, except in full, without our written approval.

**BTL**'s laboratory quality assurance procedures are in compliance with the ISO/IEC 17025: 2017 requirements, and accredited by the conformity assessment authorities listed in this test report.

**BTL** is not responsible for the sampling stage, so the results only apply to the sample as received.

The information, data and test plan are provided by manufacturer which may affect the validity of results, so it is manufacturer's responsibility to ensure that the apparatus meets the essential requirements of applied standards and in all the possible configurations as representative of its intended use.

**Limitation**

For the use of the authority's logo is limited unless the Test Standard(s)/Scope(s)/Item(s) mentioned in this test report is (are) included in the conformity assessment authorities acceptance respective.
Please note that the measurement uncertainty is provided for informational purpose only and are not use in determining the Pass/Fail results.

# Table of Contents Page

REVISION HISTORY 6
1 . GENERAL INFORMATION 7
1.1 STATEMENT OF COMPLIANCE 7
1.2 LABORATORY ENVIRONMENT 7
1.3 GENERAL DESCRIPTION OF EUT 8
1.4 MAIN TEST INSTRUMENTS 9
2 . RF EMISSIONS MEASUREMENT 10
2.1 TEST FACILITY 10
2.2 MEASUREMENT UNCERTAINTY 10
3 . SAR MEASUREMENTS SYSTEM CONFIGURATION 11
3.1 SAR MEASUREMENT SET-UP 11
3.1.1 TEST SETUP LAYOUT 11
3.2 DASY5 E-FIELD PROBE SYSTEM 12
3.2.1 PROBE SPECIFICATION 12
3.2.2 E-FIELD PROBE CALIBRATION 13
3.2.3 OTHER TEST EQUIPMENT 14
3.2.4 SCANNING PROCEDURE 15
3.2.5 SPATIAL PEAK SAR EVALUATION 16
3.2.6 DATA STORAGE AND EVALUATION 17
3.2.7 DATA EVALUATION BY SEMCAD 18
4 . SYSTEM VERIFICATION PROCEDURE 20
4.1 TISSUE VERIFICATION 20
4.2 SYSTEM CHECK 21
4.3 SYSTEM CHECK PROCEDURE 21
5 . SAR MEASUREMENT VARIABILITY AND UNCERTAINTY 22
5.1 SAR MEASUREMENT VARIABILITY 22
6 . OPERATIONAL CONDITIONS DURING TEST 23
6.1 TEST POSITION 23
6.2 TEST CONFIGURATION 24
7 . TEST RESULT 25
7.1 CONDUCTED POWER RESULTS 25
7.1.1 CONDUCTED POWER MEASUREMENTS OF WIFI 2.4G 25
7.2 SAR TEST RESULTS 26
7.2.1 SAR MEASUREMENT RESULT 27

# Table of Contents Page

**8 MULTIPLE TRANSMITTER EVALUATION** **28**

**APPENDIX** **29**

**1. TEST LAYOUT** **29**

**Appendix A. SAR Plots of System Verification**
**Appendix B. SAR Plots of SAR Measurement**
**Appendix C. Calibration Certificate**
**Appendix D. Photographs of the Test Set-Up**

# REVISION HISTORY

| Report No. | Version | Description | Issued Date | Note |
|---|---|---|---|---|
| BTL-FCC SAR-1-2601H051 | R00 | Original Report. | Mar. 18, 2026 | Valid |

# 1. GENERAL INFORMATION

## 1.1 STATEMENT OF COMPLIANCE

| Mode | Highest Bodyworn SAR-1g (W/kg) |
|---|---|
| **2.4G WLAN** | **1.439** |

Note: The device is in compliance with Specific Absorption Rate (SAR) for general population uncontrolled exposure limits according to the FCC rule §2.1093, the ANSI/IEEE C95.1, the NCRP Report Number 86 for uncontrolled environment, and had been tested in accordance with the measurement methods and procedures specified in IEEE 1528.

## 1.2 LABORATORY ENVIRONMENT

| | |
|---|---|
| Temperature | Min. = 18ºC, Max. = 25ºC |
| Relative humidity | Min. = 30%, Max. = 70% |
| Ground system resistance | < 0.5Ω |
| Ambient noise is checked and found very low and in compliance with requirement of standards.<br>Reflection of surrounding objects is minimized and in compliance with requirement of standards. | |

## 1.3 GENERAL DESCRIPTION OF EUT

| | | | | | |
|---|---|---|---|---|---|
| Equipment | MINI2 Thermal Imaging Monocular | | | | |
| Brand Name | Nocpix | | | | |
| Test Model | H25 | | | | |
| Model Name | H25 | | | | |
| Model Difference(s) | N/A | | | | |
| Hardware Version | V1-01 | | | | |
| Software Version | 010103 | | | | |
| Modulation | DSSS/OFDM | | | | |
| Operation Frequency Range(s) | Band | TX (MHz) | RX (MHz) | | |
| | WLAN 2.4G | 2400~2483.5 | | | |
| Test Channels (low-mid-high) | 1-6-11 (WiFi 2.4G 802.11b/g/ n HT20) | | | | |
| Antenna Information | Manufacturer | P/N | Antenna Type | Connector | Gain(dBi) |
| | Hefei Yingju Innovation Technology Co., Ltd. | ZY-YJ-WF-001 | FPC | IPEX-1 | 1.5 |
| Other Information | | | | | |
| Battery | Model Name | 36AQ517-41 | | | |
| | Manufacturer | Dongguan Large Electronics Co., Ltd. | | | |
| | Power Rating | 3.7V 750mAh 2.775Wh | | | |

Note: The antenna gain is provided by the manufacturer.

## 1.4 MAIN TEST INSTRUMENTS

| Item | Equipment | Manufacturer | Model | Serial No. | Cal. Date | Cal. Interval |
|---|---|---|---|---|---|---|
| 1 | DASY5 System | Speag | DASY 5 | N/A | N/A | N/A |
| 2 | Data Acquisition Electronics | Speag | DAE4 | 420 | Apr. 08, 2025 | 1 Year |
| 3 | E-field Probe | Speag | EX3DV4 | 7544 | Jun. 19, 2025 | 1 Year |
| 4 | System Validation Dipole | Speag | D2450V2 | 919 | Apr. 22, 2024 | 3 Years |
| 5 | Twin Sam Phantom | Speag | Twin Sam Phantom V5.0 | 1469 | N/A | N/A |
| 6 | Power Amplifier | Mini-Circuits | ZHL-42W+ | QA1333003 | May 29, 2025 | 1 Year |
| 7 | DC Source metter | Iteck | IT6154 | 0061041267682 01001 | May 29, 2025 | 1 Year |
| 8 | Vector Network Analyzer | Agilent | E5071C | MY46102965 | Dec. 20, 2025 | 1 Year |
| 9 | Signal Generator | Keysight | N5173B | MY59101420 | Dec. 20, 2025 | 1 Year |
| 10 | Smart Power Sensor | R&S | NRP-Z21 | 102209 | Dec. 20, 2025 | 1 Year |
| 11 | 3.5mm Economy Calibration Kit | Agilent | 85052D | MY43252246 | Nov. 20, 2025 | 1 Year |
| 12 | Directional Coupler | Talent Microwave | TC-05180-20S | 210628013 | Dec. 20, 2025 | 1 Year |
| 13 | Liquid Thermometer | Nscing Es | YZ6021S | / | Nov. 13, 2025 | 1 Year |

Note:
1. “N/A” denotes no model name, serial No. or calibration specified.
2. 1) Per KDB865664 D01 requirements for dipole calibration, the test laboratory has adopted three-year extended calibration interval. Each measured dipole is expected to evaluate with the following criteria at least on annual interval in Appendix C.
   a) There is no physical damage on the dipole;
   b) System check with specific dipole is within 10% of calibrated value;
   c) The most recent return-loss result, measured at least annually, deviates by no more than 20% from the previous measurement;
   d) The most recent measurement of the real or imaginary parts of the impedance, measured at least annually is within 5Ω from the previous measurement.
   2) Network analyzer probe calibration against air, distilled water and a short block performed before measuring liquid parameters.

# 2. RF EMISSIONS MEASUREMENT

## 2.1 TEST FACILITY

The test facilities used to collect the test data in this report is SAR room at the location of No.3, Jinshagang 1st Road, Dalang, Dongguan, Guangdong People's Republic of China.
BTL's Registration Number for FCC: 747969
BTL's Designation Number for FCC: CN1377

## 2.2 MEASUREMENT UNCERTAINTY

**Uncertainty Budget for Frequency range of 300 MHz to 3 GHz (IEC/IEEE 62209-1528)**

| SAR Uncertainty Budget According to IEC/IEEE 62209-1528 (Frequency band: 300MHz - 3GHz range) | | | | | | | | | |
|---|---|---|---|---|---|---|---|---|---|
| **Symbol** | **Input quantity *Xi* (source of uncertainty)** | **Unc. Value (±%)** | **Prob. Dist.** | **Div.** | **ci (1g)** | **ci (10g)** | **Std.Unc. (1g) (±%)** | **Std.Unc. (10g) (±%)** | **Ref.** |
| **Measurement system errors** | | | | | | | | | |
| ***CF*** | Probe calibration(±%) | 13.0 | N | 2 | 1 | 1 | 6.5 | 6.5 | 8.4.1.1 |
| ***CF*drift** | Probe calibration drift(±%) | 1.7 | R | Ö3 | 1 | 1 | 1.0 | 1.0 | 8.4.1.2 |
| ***LIN*** | Probe linearity and detection limit(±%) | 4.7 | R | Ö3 | 1 | 1 | 2.7 | 2.7 | 8.4.1.3 |
| ***BBS*** | Broadband signal(±%) | 3.0 | R | Ö3 | 1 | 1 | 1.7 | 1.7 | 8.4.1.4 |
| ***ISO*** | Probe isotropy(±%) | 7.6 | R | Ö3 | 1 | 1 | 4.4 | 4.4 | 8.4.1.5 |
| ***DAE*** | Other probe and data acquisition errors(±%) | 0.7 | N | 1 | 1 | 1 | 0.7 | 0.7 | 8.4.1.6 |
| ***AMB*** | RF ambient and noise(±%) | 1.8 | N | 1 | 1 | 1 | 1.8 | 1.8 | 8.4.1.7 |
| **D*xyz*** | Probe positioning errors(±mm) | 0.006 | N | 1 | 0.14 | 0.14 | 0.08 | 0.08 | 8.4.1.8 |
| ***DAT*** | Data processing errors(±%) | 1.2 | N | 1 | 1 | 1 | 1.2 | 1.2 | 8.4.1.9 |
| **Phantom and device (DUT or validation antenna) errors** | | | | | | | | | |
| ***LIQ*(*σ*)** | Conductivity (meas.)(±%) | 0.8 | N | 1 | 0.78 | 0.71 | 0.7 | 0.6 | 8.4.2.1 |
| ***LIQ*(*Tc*)** | Conductivity (temp.)(±%) | 4.16 | R | Ö3 | 0.78 | 0.71 | 1.9 | 1.7 | 8.4.2.2 |
| ***EPS*** | Phantom Permittivity(±%) | 14 | R | Ö3 | 0 | 0 | 0.0 | 0.0 | 8.4.2.3 |
| ***DIS*** | Distance DUT - TSL(±%) | 2 | N | 1 | 2 | 2 | 4.0 | 4.0 | 8.4.2.4 |
| ***Dxyz*** | Device Positioning(±%) | 0.1 | N | 1 | 1 | 1 | 0.1 | 0.1 | 8.4.2.5 |
| ***H*** | Device Holder(±%) | 2.1 | N | 1 | 1 | 1 | 2.1 | 2.1 | 8.4.2.6 |
| ***MOD*** | DUT Modulationm(±%) | 2.4 | R | Ö3 | 1 | 1 | 1.4 | 1.4 | 8.4.2.7 |
| ***TAS*** | Time-average SAR(±%) | 1.7 | R | Ö3 | 1 | 1 | 1.0 | 1.0 | 8.4.2.8 |
| ***RF*drift** | DUT drift(±%) | 1.3 | N | 1 | 1 | 1 | 1.3 | 1.3 | 8.4.2.9 |
| ***VAL*** | Val Antenna Unc.(±%) | 0 | N | 1 | 1 | 1 | 0.0 | 0.0 | 8.4.2.10 |
| ***Pin*** | Unc. Input Power(±%) | 0 | N | 1 | 1 | 1 | 0.0 | 0.0 | 8.4.2.11 |
| **Corrections to the SAR result** | | | | | | | | | |
| ***C*(*ε¢*,*σ*)** | Deviation to Target(±%) | 1.9 | N | 1 | 1 | 0.84 | 1.9 | 1.6 | 8.4.3.1 |
| ***C*(*R*)** | SAR scaling(±%) | 0 | R | Ö3 | 1 | 1 | 0.0 | 0.0 | 8.4.3.2 |
| ***u*(D*SAR*)** | Combined uncertainty | | | | | | 10.5 | 10.4 | |
| | Coverage Factor for 95% | | | | | | k=2 | k=2 | |
| ***U*** | Expanded uncertainty | | | | | *U* = | 21.0 | 20.9 | |
| a Other probability distributions and divisors may be used if they better represent available knowledge of the quantities concerned. | | | | | | | | | |

# 3. SAR MEASUREMENTS SYSTEM CONFIGURATION

## 3.1 SAR MEASUREMENT SET-UP

The DASY5 system for performing compliance tests consists of the following items:

1. A standard high precision 6-axis robot (Stäubli RX family) with controller and software. An arm extension for accommodating the data acquisition electronics (DAE).
2. A dosimetric probe, i.e. an isotropic E-field probe optimized and calibrated for usage in tissue simulating liquid. The probe is equipped with an optical surface detector system.
3. A data acquisition electronic (DAE) which performs the signal amplification, signal multiplexing, AD-conversion, offset measurements, mechanical surface detection, collision detection, etc. The unit is battery powered with standard or rechargeable batteries. The signal is optically transmitted to the EOC.
4. A unit to operate the optical surface detector which is connected to the EOC.
5. The Electro-Optical Coupler (EOC) performs the conversion from the optical into a digital electric signal of the DAE. The EOC is connected to the DASY5 measurement server.
6. TheDASY5 measurement server, which performs all real-time data evaluation for field measurements and surface detection, controls robot movements and handles safety operation. A computer operating Windows.
7. DASY5 software and SEMCAD data evaluation software.
8. Remote control with teach panel and additional circuitry for robot safety such as warning lamps, etc.
9. The generic twin phantom enabling the testing of left-hand and right-hand usage.
10. The device holder for handheld mobile phones.
11. Tissue simulating liquid mixed according to the given recipes.
12. System validation dipoles allowing to validate the proper functioning of the system.

### 3.1.1 TEST SETUP LAYOUT

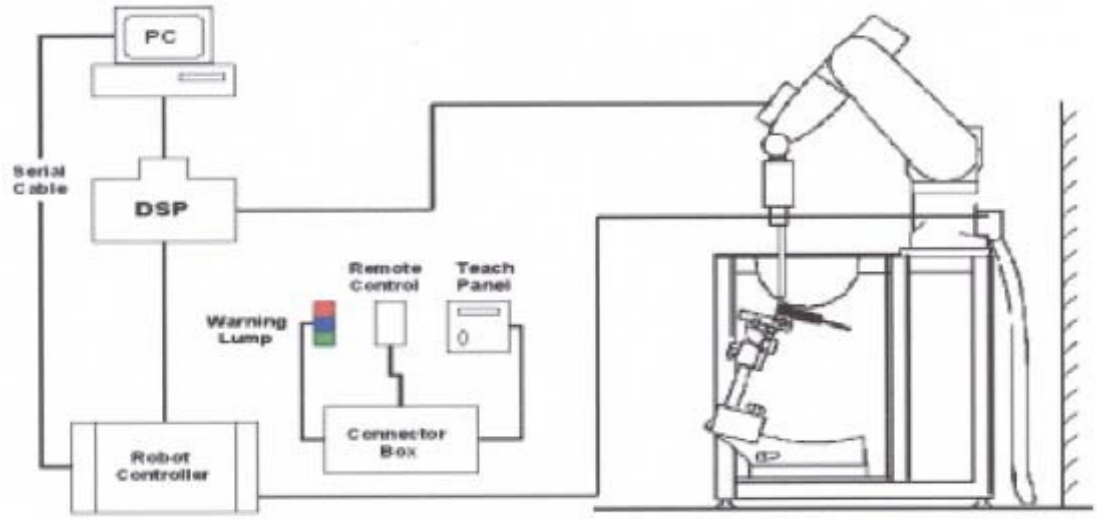

## 3.2 DASY5 E-FIELD PROBE SYSTEM

The SAR measurements were conducted with the dosimetric probe EX3DV4 (manufactured by SPEAG), designed in the classical triangular configuration and optimized for dosimetric evaluation.

### 3.2.1 PROBE SPECIFICATION

EX3DV4

| | |
|---|---|
| Construction | Symmetrical design with triangular core Interleaved sensors Built-in shielding against static charges PEEK enclosure material (resistant to organic solvents, e.g., DGBE) |
| Calibration | ISO/IEC 17025 calibration service available |
| Frequency | 4 MHz to 10 GHz<br>Linearity: ± 0.2 dB (30 MHz to 10 GHz) |
| Directivity | ± 0.1 dB in TSL (rotation around probe axis)<br>± 0.3 dB in TSL (rotation normal to probe axis) |
| Dynamic Range | 10 μW/g to > 100 mW/g<br>Linearity: ± 0.2dB(noise: typically <1 μW/g) |
| Dimensions | Overall length: 337 mm (Tip: 9 mm)<br>Tip diameter: 2.5 mm (Body: 12 mm)<br>Typical distance from probe tip to dipole centers: 1.0 mm |

Note: This size is only the standard information for the E-Field Probe device. For the exact dimensions, please refer to the calibration report in the appendix.

**E-field Probe**

### 3.2.2 E-FIELD PROBE CALIBRATION

Eachprobeiscalibratedaccordingtoadosimetricassessmentprocedurewithaccuracybetterthan±10%. The spherical isotropy was evaluatedandfoundtobebetterthan±0.25dB.The sensitivity parameters (NormX, NormY, NormZ), the diode compression parameter (DCP) and the conversion factor (ConvF) of the probe are tested.

The free space E-field from amplified probe outputs is determined in a test chamber. This is performed in a TEM cell for frequencies bellow 1 GHz, and in a wave guide above 1 GHz for free space. For the free space calibration, the probe is placed in the volumetric center of the cavity and at the proper orientation with the field. The probe is then rotated 360 degrees.

E-field temperature correlation calibration is performed in a flat phantom filled with the appropriate simulated brain tissue. The measured free space E-field in the medium correlates to temperature rise in a dielectric medium. For temperature correlation calibration a RF transparent thermistor-based temperature probe is used in conjunction with the E-field probe.

$$\mathbf{SAR} = \mathbf{C}\frac{\Delta T}{\Delta t}$$

Where: $\Delta t$=Exposure time (30 seconds),

C =Heat capacity of tissue (brain or muscle),

$\Delta T$=Temperature increase due to RF exposure.

Or $$\mathbf{SAR} = \frac{|E|^2 \sigma}{\rho}$$

Where: σ=Simulated tissue conductivity,

ρ=Tissue density (kg/m3).

### 3.2.3 OTHER TEST EQUIPMENT

#### 3.2.3.1. Device Holder for Transmitters

**Construction:** Simple but effective and easy-to-use extension for Mounting Device that facilitates the testing of larger devices (e.g., laptops, cameras, etc.) It is lightweight and fits easily on the upper part of the Mounting Device in place of the phone positioner. The extension is fully compatible with the Twin SAM, ELI Phantoms.
**Material:** POM, Acrylic glass, Foam

#### 3.2.3.2 Phantom

| | | |
|---|---|---|
| Model | Twin SAM | |
| Construction | The shell corresponds to the specifications of the Specific Anthropomorphic Mannequin (SAM) phantom defined in IEC/IEEE 62209-1528. It enables the dosimetric evaluation of left—and right-hand phone usage as well as body-mounted usage at the flat phantom region. A cover prevents the liquid from evaporating. Reference markings on the phantom allow the complete setup of all predefined phantom positions and measurement grids by teaching three points with the robot. | |
| Shell Thickness | 2 ± 0.2 mm | |
| Filling Volume | Approx. 25 liters | |
| Dimensions | Length:1000mm; Width: 500mm<br>Height: adjustable feet | |
| Aailable | Special | |

### 3.2.4 SCANNING PROCEDURE

The DASY5 installation includes predefined files with recommended procedures for measurements and validation. They are read-only document files and destined as fully defined but unmeasured masks. All test positions (head or body-worn) are tested with the same configuration of test steps differing only in the grid definition for the different test positions.

The “reference” and “drift” measurements are located at the beginning and end of the batch process. They measure the field drift at one single point in the liquid over the complete procedure. The indicated drift is mainly the variation of the DUT’s output power and should vary max. ± 5 %.

The “surface check” measurement tests the optical surface detection system of the DASY5 system by repeatedly detecting the surface with the optical and mechanical surface detector and comparing the results. The output gives the detecting heights of both systems, the difference between the two systems and the standard deviation of the detection repeatability. Air bubbles or refraction in the liquid due to separation of the sugar-water mixture gives poor repeatability (above ± 0.1mm). To prevent wrong results tests are only executed when the liquid is free of air bubbles. The difference between the optical surface detection and the actual surface depends on the probe and is specified with each probe. (It does not depend on the surface reflectivity or the probe angle to the surface within ± 30°.)

- Area Scan

The “area scan” measures the SAR above the DUT or verification dipole on a parallel plane to the surface. It is used to locate the approximate location of the peak SAR with 2D spline interpolation. The robot performs a stepped movement along one grid axis while the local electrical field strength is measured by the probe. The probe is touching the surface of the SAM during acquisition of measurement values. The standard scan uses large grid spacing for faster measurement. Standard grid spacing for head measurements is 15 mm in x- and y- dimension (≤2GHz), 12 mm inx- and y- dimension (2-4 GHz) and 10mm in x- and y- dimension (4-6GHz). If a finer resolution is needed, the grid spacing can be reduced. Grid spacing and orientation have no influence on the SAR result. For special applications where the standard scan method does not find the peak SAR within the grid, e.g. mobile phones with flip cover, the grid can be adapted in orientation.

- Zoom Scan

A “zoom scan” measures the field in a volume around the 2D peak SAR value acquired in the previous “coarse” scan. This is a fine grid with maximum scan spatial resolution: $\Delta x_{zoom}$, $\Delta y_{zoom}$≤2GHz -≤8mm, 2-4GHz -≤5 mm and 4-6 GHz-≤4mm; $\Delta z_{zoom}$≤3GHz -≤5 mm, 3-4 GHz-≤4mm and 4-6GHz-≤2mm where the robot additionally moves the probe along the z-axis away from the bottom of the Phantom. DASY is also able to perform repeated zoom scans if more than 1 peak is found during area scan. In this document, the evaluated peak 1g and 10g averaged SAR values are shown in the 2D-graphics in Appendix B. Test results relevant for the specified standard (see chapter 1.4.) are shown in table form in chapter 7.2.

A Z-axis scan measures the total SAR value at the x-and y-position of the maximum SAR value found during the cube scan. The probe is moved away in z-direction from the bottom of the SAM phantom in 2 mm steps. This measurement shows the continuity of the liquid and can - depending in the field strength – also show the liquid depth.

The following table summarizes the area scan and zoom scan resolutions per FCC KDB 865664D01:

| Frequency | Maximun Area Scan resolution ($\Delta x_{area}$, $\Delta y_{area}$) | Maximun Zoom Scan spatial resolution ($\Delta x_{Zoom}$, $\Delta y_{Zoom}$) | Maximun Zoom Scan spatial resolution | | | Minimum zoom scan volume (x,y,z) |
|---|---|---|---|---|---|---|
| | | | Uniform Grid | Graded Grad | | |
| | | | $\Delta z_{Zoom}(n)$ | $\Delta z_{Zoom}(1)$* | $\Delta z_{Zoom}(n>1)$* | |
| ≤2GHz | ≤15mm | ≤8mm | ≤5mm | ≤4mm | ≤1.5*$\Delta z_{Zoom}$(n-1) | ≥30mm |
| 2-3GHz | ≤12mm | ≤5mm | ≤5mm | ≤4mm | ≤1.5*$\Delta z_{Zoom}$(n-1) | ≥30mm |
| 3-4GHz | ≤12mm | ≤5mm | ≤4mm | ≤3mm | ≤1.5*$\Delta z_{Zoom}$(n-1) | ≥28mm |
| 4-5GHz | ≤10mm | ≤4mm | ≤3mm | ≤2.5mm | ≤1.5*$\Delta z_{Zoom}$(n-1) | ≥25mm |
| 5-6GHz | ≤10mm | ≤4mm | ≤2mm | ≤2mm | ≤1.5*$\Delta z_{Zoom}$(n-1) | ≥22mm |

### 3.2.5 SPATIAL PEAK SAR EVALUATION

The spatial peak SAR - value for 1 and 10 g is evaluated after the Cube measurements have been done. The basis of the evaluation are the SAR values measured at the points of the fine cube grid consisting of 5 x 5 x 7 points (with 8mm horizontal resolution) or 7 x 7 x 7 points (with 5mm horizontal resolution) or 8 x 8 x 7 points (with 4mm horizontal resolution). The algorithm that finds the maximal averaged volume is separated into three different stages.

- The data between the dipole center of the probe and the surface of the phantom are extrapolated. This data cannot be measured since the center of the dipole is 2.7 mm away from the tip of the probe and the distance between the surface and the lowest measuring point is about 1 mm (see probe calibration sheet). The extrapolated data from a cube measurement can be visualized by selecting “Graph Evaluated”.
- The maximum interpolated value is searched with a straight-forward algorithm. Around this maximum the SAR - values averaged over the spatial volumes (1g or 10 g) are computed using the 3d-spline interpolation algorithm. If the volume cannot be evaluated (i.e., if a part of the grid was cut off by the boundary of the measurement area) the evaluation will be started on the corners of the bottom plane of the cube.
- All neighboring volumes are evaluated until no neighboring volume with a higher average value is found.

**Extrapolation**

The extrapolation is based on a least square algorithm [W. Gander, Computer mathematic, p.168-180]. Through the points in the first 3 cm along the z-axis, polynomials of order four are calculated. These polynomials are then used to evaluate the points between the surface and the probe tip. The points, calculated from the surface, have a distance of 1 mm from each other.

**Interpolation**

The interpolation of the points is done with a 3d-Spline. The 3d-Spline is composed of three one-dimensional splines with the "Not a knot"-condition [W. Gander, Computer mathematic, p.141-150] (x, y and z -direction) [Numerical Recipes in C, Second Edition, p.123ff].

**Volume Averaging**

At First the size of the cube is calculated. Then the volume is integrated with the trapezoidal algorithm. 8000 points (20x20x20) are interpolated to calculate the average.

**Advanced Extrapolation**

DASY5 uses the advanced extrapolation option which is able to compensate boundary effects on E-field probes.

### 3.2.6 DATA STORAGE AND EVALUATION

#### 3.2.6.1 Data Storage

The DASY5 software stores the acquired data from the data acquisition electronics as raw data (in microvolt readings from the probe sensors), together with all necessary software parameters for the data evaluation (probe calibration data, liquid parameters and device frequency and modulation data) in measurement files with the extension “DAE”. The software evaluates the desired unit and format for output each time the data is visualized or exported. This allows verification of the complete software setup even after the measurement and allows correction of incorrect parameter settings. For example, if a measurement has been performed with a wrong crest factor parameter in the device setup, the parameter can be corrected afterwards and the data can be re-evaluated.

The measured data can be visualized or exported in different units or formats, depending on the selected probe type ([V/m], [A/m], [°C], [mW/g], [mW/cm²], [dBrel], etc.). Some of these units are not available in certain situations or show meaningless results, e.g., a SAR output in a lossless media will always be zero. Raw data can also be exported to perform the evaluation with other software packages.

### 3.2.7 DATA EVALUATION BY SEMCAD

The SEMCAD software automatically executes the following procedures to calculate the field units from the microvolt readings at the probe connector. The parameters used in the evaluation are stored in the configuration modules of the software:

| | | |
|---|---|---|
| Probe parameters: | Sensitivity | Normi, $a_{i0}$, $a_{i1}$, $a_{i2}$ |
| | Conversion factor | $ConvF_i$ |
| | Diode compression point | $Dcp_i$ |
| Device parameters: | Frequency | f |
| | Crest factor | cf |
| Media parameters: | Conductivity | |
| | Density | |

These parameters must be set correctly in the software. They can be found in the component documents or they can be imported into the software from the configuration files issued for the DASY5 components. In the direct measuring mode of the multi meter option, the parameters of the actual system setup are used. In the scan visualization and export modes, the parameters stored in the corresponding document files are used.

The first step of the evaluation is a linearization of the filtered input signal to account for the compression characteristics of the detector diode. The compensation depends on the input signal, the diode type and the DC-transmission factor from the diode to the evaluation electronics.

If the exciting field is pulsed, the crest factor of the signal must be known to correctly compensate for peak power. The formula for each channel can be given as:

$$V_i = U_i + U_i^2 \cdot cf / dcp_i$$

| | | |
|---|---|---|
| With | $V_i$ = compensated signal of channel i | ( i = x, y, z ) |
| | $U_i$ = input signal of channel i | ( i = x, y, z ) |
| | cf = crest factor of exciting field | (DASY parameter) |
| | $dcp_i$ = diode compression point | (DASY parameter) |

From the compensated input signals the primary field data for each channel can be evaluated:

E-field probes: $E_i = ( V_i / Norm_i \cdot ConvF )^{1/2}$

H-field probes: $H_i = ( V_i )^{1/2} \cdot ( a_{i0} + a_{i1} f + a_{i2} f^2 ) / f$

With $V_i$ = compensated signal of channel i ( i = x, y, z )

$Norm_i$ = sensor sensitivity of channel i ( i = x, y, z )
[mV/(V/m)$^2$] for E-field Probes

ConvF = sensitivity enhancement in solution

aij = sensor sensitivity factors for H-field probes

f = carrier frequency [GHz]

$E_i$ = electric field strength of channel i in V/m

$H_i$ = magnetic field strength of channel i in A/m

The RSS value of the field components gives the total field strength (Hermitian magnitude):

$$E_{tot} = (E_X^2 + E_Y^2 + E_Z^2)^{1/2}$$

The primary field data are used to calculate the derived field units.

$$SAR = (E_{tot})^2 \cdot \boldsymbol{\sigma} / (\boldsymbol{\rho} \cdot 1000)$$

With SAR = local specific absorption rate in mW/g

$E_{tot}$ = total field strength in V/m
= conductivity in [mho/m] or [Siemens/m]
= equivalent tissue density in g/cm$^3$

Note that the density is normally set to 1 (or 1.06), to account for actual brain density rather than the density of the simulation liquid. The power flow density is calculated assuming the excitation field to be a free space field.

$$P_{pwe} = E_{tot}^2 / 3770 \text{ or } P_{pwe} = H_{tot}^2 \cdot 37.7$$

With $P_{pwe}$ = equivalent power density of a plane wave in mW/cm$^2$
$E_{tot}$ = total field strength in V/m
$H_{tot}$ = total magnetic field strength in A/m

# 4. SYSTEM VERIFICATION PROCEDURE

## 4.1 TISSUE VERIFICATION

The simulating liquids should be checked at the beginning of a series of SAR measurements to determine of the dielectic parameter are within the tolerances of the specified target values. The measured conductivity and relative permittivity should be within ± 5% of the target values.

The following materials are used for producing the tissue-equivalent materials.

| Tissue Type | Bactericide | DGBE | HEC | NaCl | Sucrose | Triton X-100 | Water | Diethylene Glycol Mono-hexylether |
|---|---|---|---|---|---|---|---|---|
| Head 2450 | - | 45.0 | - | 0.1 | - | - | 54.9 | - |

Salt: 99+% Pure Sodium Chloride; Sugar: 98+% Pure Sucrose; Water: De-ionized, 16M + resistivity
HEC: Hydroxyethyl Cellulose; DGBE: 99+% Di(ethylene glycol) butyl ether,[2-(2-butoxyethoxy)ethanol]
Triton X-100(ultra pure): Polyethylene glycol mono [4-(1,1,3,3-tetramethylbutyl)phenyl]ether

| Tissue Verification | | | | | | | | | |
|---|---|---|---|---|---|---|---|---|---|
| Tissue Type | Frequency (MHz) | Liquid Temp. (℃) | Conductivity (σ) | Permittivity (εr) | Targeted Conductivity (σ) | Targeted Permittivity (εr) | Deviation Conductivity (σ) (%) | Deviation Permittivity (εr) (%) | Date |
| Head | 2450 | 22.9 | 1.862 | 39.685 | 1.80 | 39.2 | 3.44 | 1.24 | Mar. 10, 2026 |

Note:
1) The dielectric parameters of the tissue-equivalent liquid should be measured under similar ambient conditions and within 2 °C of the conditions expected during the SAR evaluation to satisfy protocol requirements.
2) KDB 865664 was ensured to be applied for probe calibration frequencies greater than or equal to 50MHz of the EUT frequencies.
3) The above measured tissue parameters were used in the DASY software to perform interpolation via the DASY software to determine actual dielectric parameters at the test frequencies. The SAR test plots may slightly differ from the table above since the DASY rounds to three significant digits.

## 4.2 SYSTEM CHECK

The system check is performed for verifying the accuracy of the complete measurement system and performance of the software. The system check is performed with tissue equivalent material according to EN IEC/IEEE 62209-1528 (described above). The following table shows system check results for all frequency bands and tissue liquids used during the tests.

| System Check | Date | Frequency (MHz) | Targeted SAR-1g (W/kg) | Measured SAR-1g (W/kg) | normalized SAR-1g (W/kg) | Deviation-1g (%) | Dipole S/N |
|---|---|---|---|---|---|---|---|
| Head | Mar. 10, 2026 | 2450 | 53.10 | 5.37 | 53.70 | 1.13 | 919 |

## 4.3 SYSTEM CHECK PROCEDURE

The system check is performed by using a system check dipole which is positioned parallel to the planar part of the SAM phantom at the reference point. The distance of the dipole to the SAM phantom is determined by a plexiglass spacer. The dipole is connected to the signal source consisting of signal generator and amplifier via a directional coupler, N-connector cable and adaption to SMA. It is fed with a power of 250mW (below 3GHz) or 100mW (3-6GHz). To adjust this power a power meter is used.
The power sensor is connected to the cable before the system check to measure the power at this point and do adjustments at the signal generator. At the outputs of the directional coupler both return loss as well as forward power are controlled during the system check to make sure that emitted power at the dipole is kept constant. This can also be checked by the power drift measurement after the test.

System check results have to be equal or near the values determined during dipole calibration (target SAR in table above) with the relevant liquids and test system (±10 %).

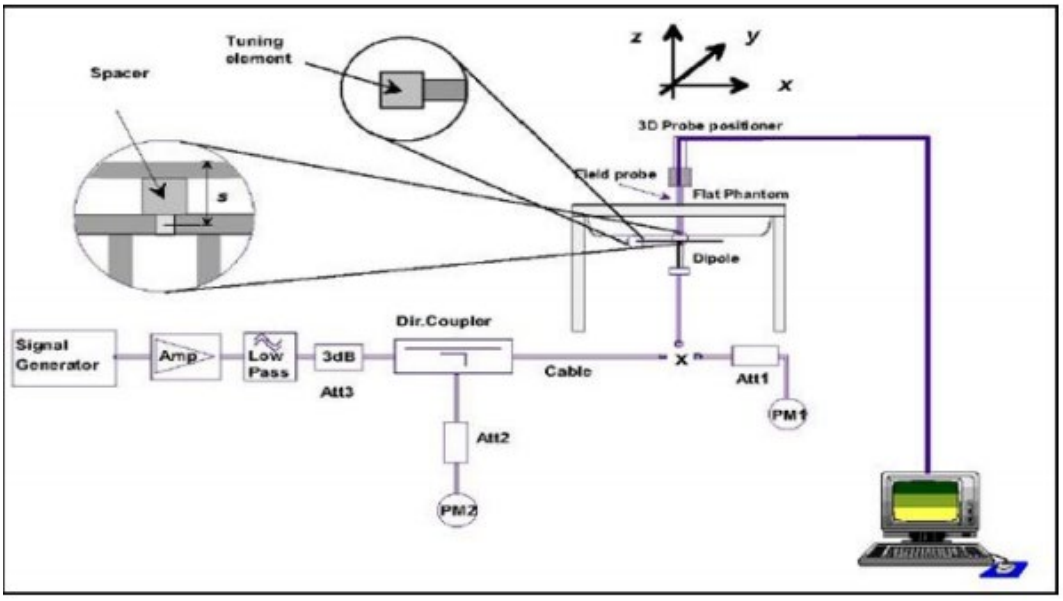

# 5. SAR MEASUREMENT VARIABILITY AND UNCERTAINTY

## 5.1 SAR MEASUREMENT VARIABILITY

Per KDB865664 D01 SAR measurement 100 MHz to 6 GHz, SAR measurement variability must be assessed for each frequency band, which is determined by the SAR probe calibration point and tissue-equivalent medium used for the device measurements. The additional measurements are repeated after the completion of all measurements requiring the same head or body tissue-equivalent medium in a frequency band. The test device should be returned to ambient conditions (normal room temperature) with the battery fully charged before it is re-mounted on the device holder for the repeated measurement(s) to minimize any unexpected variations in the repeated results.

1) Repeated measurement is not required when the original highest measured SAR is < 2.0W/kg; steps 2) through 4) do not apply.
2) When the original highest measured SAR is ≥ 2.0W/kg, repeat that measurement once.
3) Perform a second repeated measurement only if the ratio of largest to smallest SAR for the original and first repeated measurements is > 3.0 or when the original or repeated measurement is ≥ 3.625 W/kg (~ 10% from the 1-g SAR limit).
4) Perform a third repeated measurement only if the original, first or second repeated measurement is ≥ 3.75 W/kg and the ratio of largest to smallest SAR for the original, first and second repeated measurements is > 3.0.

The same procedures should be adapted for measurements according to extremity and occupational exposure limits by applying a factor of 2.5 for extremity exposure and a factor of 5 for occupational exposure to the corresponding SAR thresholds.

The detailed repeated measurement results are shown in Section 7.2.

# 6. OPERATIONAL CONDITIONS DURING TEST

## 6.1 TEST POSITION

The location of the antenna inside EUT is as below.

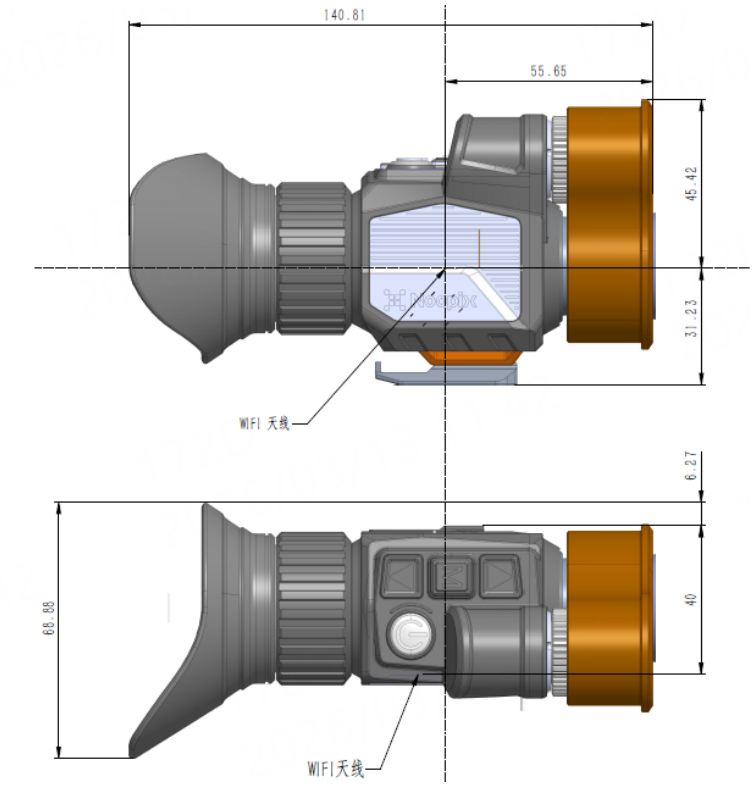


The WiFi Antenna-to-EUT sides separation distances are as below:

| Antenna | Front Side | Back Side | Left Side | Right Side | Top Side | Bottom Side |
|---|---|---|---|---|---|---|
| WiFi Antenna | 40mm | 1mm | 31.23mm | 45.42mm | 55.65mm | 140.81mm |

## 6.2 TEST CONFIGURATION

For BT SAR testing, BT engineering testing software installed on the DUT can provide continuous transmitting RF signal.

| Duty Cycle |
| --- |
| WiFi 2.4G |
| 98.59% |
| |

# 7. TEST RESULT

## 7.1 CONDUCTED POWER RESULTS

### 7.1.1 CONDUCTED POWER MEASUREMENTS OF WIFI 2.4G

| Band | Mode | Channel | Frequency(MHz) | Data Rate (Mbps) | Max. Tune up | Average Power(dBm) |
|---|---|---|---|---|---|---|
| 2.4G WIFI | 802.11b | 1 | 2412 | 1 | 12.00 | **11.47** |
| | | 6 | 2437 | | 11.50 | **11.25** |
| | | 11 | 2462 | | 11.50 | **11.12** |
| | 802.11g | 1 | 2412 | 6 | 11.00 | 10.05 |
| | | 6 | 2437 | | 11.00 | 10.02 |
| | | 11 | 2462 | | 11.00 | 9.92 |
| | 802.11n20 | 1 | 2412 | HT0 | 11.00 | 9.87 |
| | | 6 | 2437 | | 11.00 | 9.81 |
| | | 11 | 2462 | | 11.00 | 9.72 |

Note:
1) The Average conducted power of WiFi 2.4G is measured with RMS detector.
2) The tested channel results are marks in bold.

## 7.2 SAR TEST RESULTS

**General Notes:**

1) Per KDB447498 D01, all measurement SAR results are scaled to the maximum tune-up tolerance limit to demonstrate compliant.
2) Per KDB447498 D01, testing of other required channels within the operating mode of a frequency band is not required when the reported 1-g or 10-g SAR for the mid-band or highest output power channel is: ≤ 0.8 W/kg or 2.0 W/kg, for 1-g or 10-g respectively, when the transmission band is ≤ 100 MHz. When the maximum output power variation across the required test channels is > ½ dB, instead of the middle channel, the highest output power channel must be used.
3) Per KDB865664 D01, for each frequency band, repeated SAR measurement is required only when the measured SAR is ≥ 0.8W/Kg; if the deviation among the repeated measurement is ≤ 20%, and the measured SAR < 1.45W/Kg, only one repeated measurement is required.
4) Per KDB865664 D02, SAR plot is only required for the highest measured SAR in each exposure configuration, wireless mode and frequency band combination; Plots are also required when the measured SAR is > 1.5 W/kg, or > 7.0 W/kg for occupational exposure. The published RF exposure KDB procedures may require additional plots; for example, to support SAR to peak location separation ratio test exclusion and/or volume scan post-processing.

**WLAN Notes:**

1) For exposure conditions with multiple test positions, such as handset operating next to the ear, devices with hotspot mode, procedures for initial test position can be applied. Using the transmission mode determined by the DSSS procedure or initial test configuration, area scans are measured for all positions in an exposure condition. The test position with the highest extrapolated (peak) SAR is used as the initial test position. When the reported SAR of the initial test position is ≤ 0.4 W/kg, further SAR measurement is not required for the other (remaining) test positions. Otherwise, SAR is evaluated at the subsequent highest peak SAR position until the reported SAR result is ≤ 0.8 W/kg or all test positions are measured.
2) Justification for test configurations for WLAN per KDB Publication 248227 for 2.4GHz WIFI single transmission chain operations, the highest measured maximum output power Channel for DSSS was selected for SAR measurement. SAR for OFDM modes (2.4GHz 802.11g/n) was not required due to the maximum allowed powers and the highest reported DSSS SAR. See Section7.1 for more information.

### 7.2.1 SAR MEASUREMENT RESULT

| Test No. | Band | Mode | Channel | Test Position | Separation Distance (mm) | Duty Cycle % | Maximum Tune-up (dBm) | Conducted Power (dBm) | Power Drift (dB) | SAR 1g (W/kg) | SAR 10g (W/kg) | Reported 1g SAR |
|---|---|---|---|---|---|---|---|---|---|---|---|---|
| W01 | WiFi 2.4G | 802.11b | 1 | Front Side | 0 | 99 | 12 | 11.47 | 0 | ≤0.001 | ≤0.001 | ≤0.001 |
| W02 | WiFi 2.4G | 802.11b | 1 | Back Side | 0 | 99 | 12 | 11.47 | -0.01 | 1.160 | 0.386 | 1.329 |
| W03 | WiFi 2.4G | 802.11b | 1 | Left Side | 0 | 99 | 12 | 11.47 | 0.05 | 0.023 | 0.008 | 0.027 |
| W04 | WiFi 2.4G | 802.11b | 1 | Right Side | 0 | 99 | 12 | 11.47 | 0 | ≤0.001 | ≤0.001 | ≤0.001 |
| W05 | WiFi 2.4G | 802.11b | 1 | Top Side | 0 | 99 | 12 | 11.47 | 0 | ≤0.001 | ≤0.001 | ≤0.001 |
| W06 | WiFi 2.4G | 802.11b | 1 | Bottom Side | 0 | 99 | 12 | 11.47 | 0 | ≤0.001 | ≤0.001 | ≤0.001 |
| W07 | WiFi 2.4G | 802.11b | 6 | Back Side | 0 | 99 | 11.5 | 11.25 | 0.09 | 1.280 | 0.425 | 1.375 |
| W08 | WiFi 2.4G | 802.11b | 11 | Back Side | 0 | 99 | 11.5 | 11.12 | 0.12 | **1.300** | **0.439** | **1.439** |

Note:
(1) The value with boldface is the maximum SAR Value of each test band.
(2) The requirement followed by the client's specification.

# 8 MULTIPLE TRANSMITTER EVALUATION

The following tables list information which is relevant for the decision if a simultaneous transmit evaluation is necessary according to FCC KDB 447498 D01 Interim RF Exposure Procedures and Equipment Authorization Policies for Mobile and Portable Devices.

The location of the antenna inside the EUT is shown as below picture:

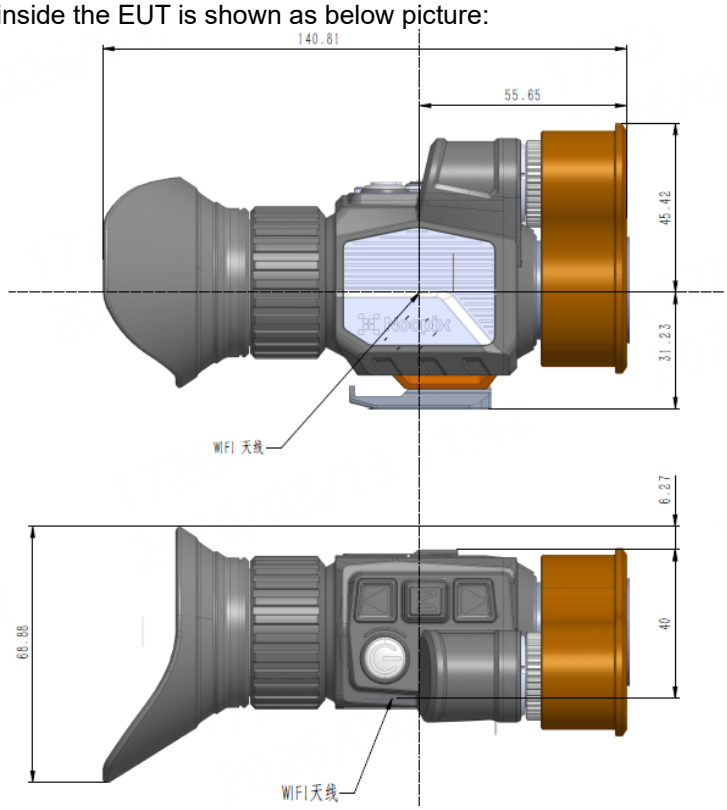


Note: The EUT only has one antenna and does not have synchronous transmission function.

# APPENDIX

## 1. TEST LAYOUT

**Specific Absorption Rate Test Layout**

**Liquid depth in the flat Phantom (≥15cm depth)**

HSL_2300MHz-2700MHz_18.5cm

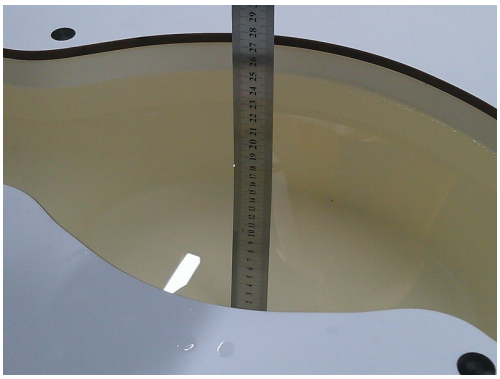

# Appendix A. SAR Plots of System Verification

**(Pls See BTL-FCC SAR-1-2601H051_Appendix A.)**

# Appendix B. SAR Plots of SAR Measurement

**(Pls See BTL-FCC SAR-1-2601H051_Appendix B.)**

# Appendix C. Calibration Certificate

**(Pls See BTL-FCC SAR-1-2601H051_Appendix C.)**

# Appendix D. Photographs of the Test Set-Up

**(Pls See BTL-FCC SAR-1-2601H051_Appendix D.)**

**End of Test Report**