SPECIFICATION FOR APPROVAL
承认书

CUSTOMER
客户名称：_____

CUSTOMER’S P/N
客户料号：_____

PART NUMBER
料号：_____1608C2G42M200-01_____

ISSUE DATE
日期：_____

CUSTOMER APPROVED 客户承认

1608C2G42M200-01 Chip antenna

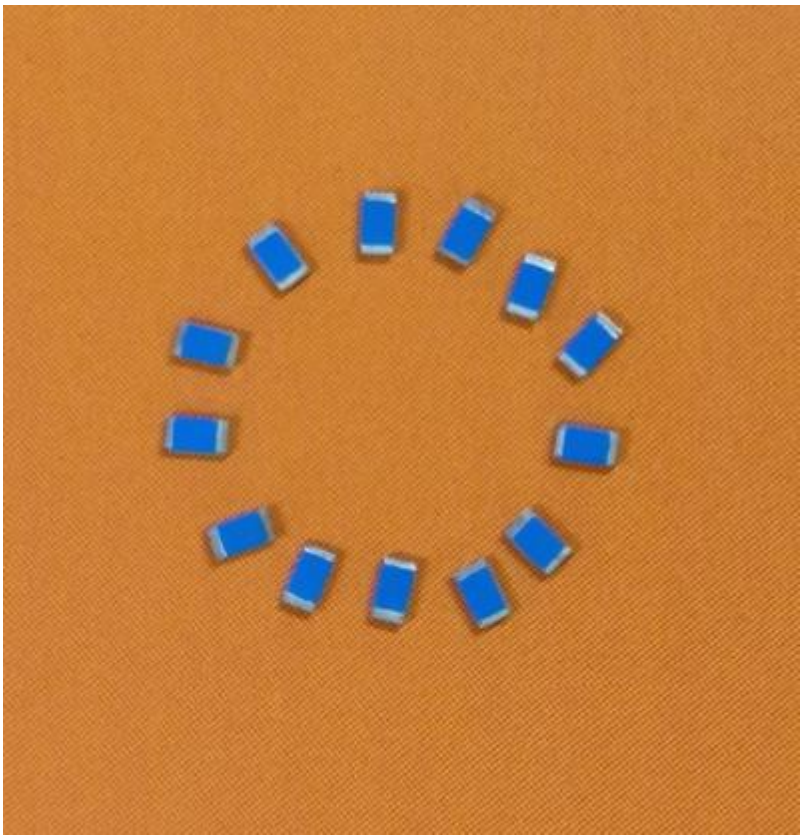

※ Features：

- Monolithic SMD

with small, low-profile and light-weight type.

- Wide bandwidth
- RoHS compliant
- Size:1.6x0.8x0.8

※ Applications：

- Bluetooth/ Wireless LAN/ HomeRF
- ISM band 2.4GHz applications

Specifications:

Center frequency	2.42GHz
Bandwidth	200MHz(typ.)
Peak gain	-5.28dBi
Average Gain	-6.33dBi
VSWR	<5.0
Impedance	50Ω
Power Capacity	2W(max)
Operation temperature	-40 ~ +85 °C
Storage temperature	-40 ~ +85 °C

Part Number Lnformation：

A 1608 C 2G42 M200 - 01

A	Antenna	2G42	CenterFrequency=2.42G
1608	Size1.6x0.8	M200	Bandwidth200M
C	Capacitive	01	Part Number

Structure description：

Pin No.	1	2
Pin assignment	Feeding Point	GND
Note: One of these two pads is connected with RF signal, and the other is used for fixing without receiving any signal. The left and right sides of these two pads are completely symmetric, and do not distinguish between positive and negative and left and right.		

Description of dimensions ：

Symbol(mm)	L	W	H
Dimensions	1.6 ± 0.1	0.8 ± 0.1	0.8 ± 0.1

Antenna p lacement and clearance processing and matching network diagram

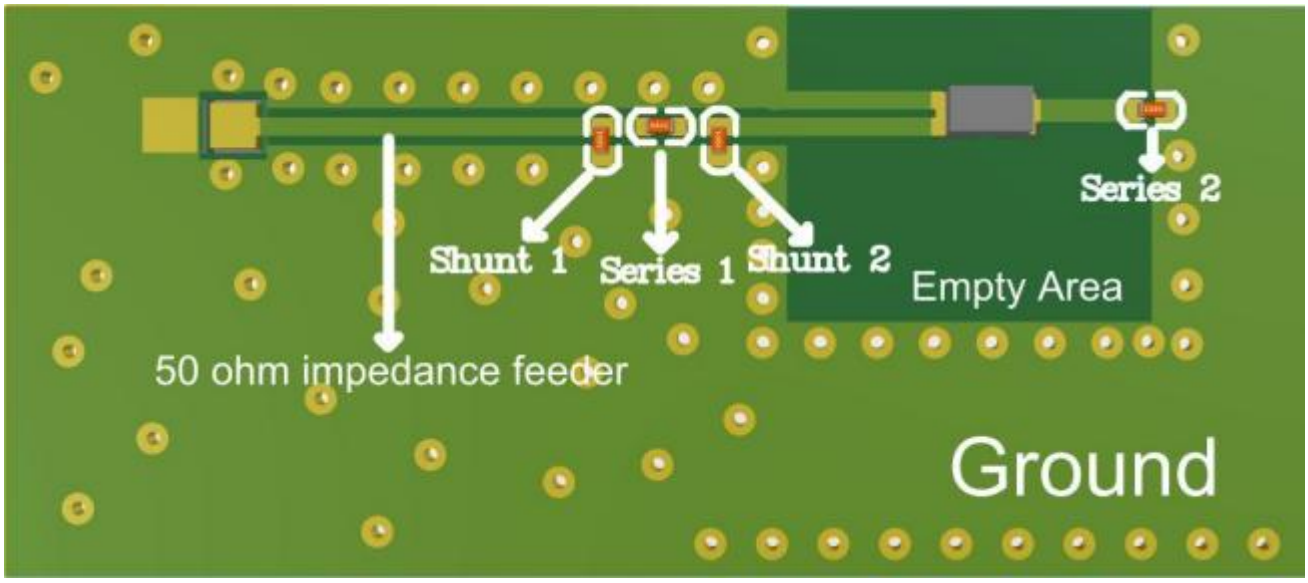

Impedance matching device values	并联器件 Shunt 1	NC
	串联器件 Series 1	1.5pF
	并联器件 Shunt 2	NC
	串联器件 Series 2	0R

The three matching devices together form a π-shaped matching network for impedance matching of A1608C2G42M100-02 patch antenna. The specific device values of these matching devices need to be obtained after the antenna impedance matching and debugging. The device values shown in the above figure are the values of our test circuit board and can be used as reference values. If you do not require high antenna performance, you can also use the above reference values directly.

Line width should be designed to match 50 Ohm characteristic impedance, depending on PCB material and thickness.

It is recommended that the antenna be placed on the edge or corner of the circuit board, do not place the antenna in the middle of the circuit board, and do not let the antenna be surrounded by conductors.

Clearance is required near the antenna Area of the circuit board. As shown below, the Empty Area (white area) in the circuit board is the clearance area of the antenna. The so-called clearance area refers to an area that can not be paved and routed except for antenna pads and antenna signal wiring. The clearance treatment of this area should be for all layers of the PCB board, not just for the surface layer.

The antenna headroom area should be as large as possible, and the antenna should be placed as close as possible to the edge of the board, so that the antenna body is away from the circuit board, and the larger headroom means better antenna efficiency and gain performance.

In the structure of the whole machine, it is recommended that there is no conductor above or below the headroom area overlooking the PCB direction, otherwise the antenna performance will be affected.

Non-clearance areas need to be paved, and the ground between different layers should be increased as much as possible through the hole connection.

Any type of antenna needs to be impedance matched to ensure that the antenna performance meets the requirements of the impedance specification, and the A1608C2G42M100-02 patch antenna also needs to add a matching network to ensure that the antenna performance meets the standard.

The device used for antenna matching debugging is a network analyzer. If you

are an antenna professional technician, you can pass the network by yourself

Network analyzer for antenna matching debugging. If you do not have the relevant technology, please contact us, we can provide your products

For professional antenna impedance debugging services. For antenna matching debugging, you need to provide the whole product (it does not need to be turned on).

Please note that the antenna impedance matching debugging mentioned here is unrelated to the RF wire impedance control. The RF wire impedance control is only for the RF wire routing in the paved area, and the antenna impedance matching here is for the antenna. Please do not confuse the two.

2、 Measurement Results

S11-VSWR/Return Loss ：

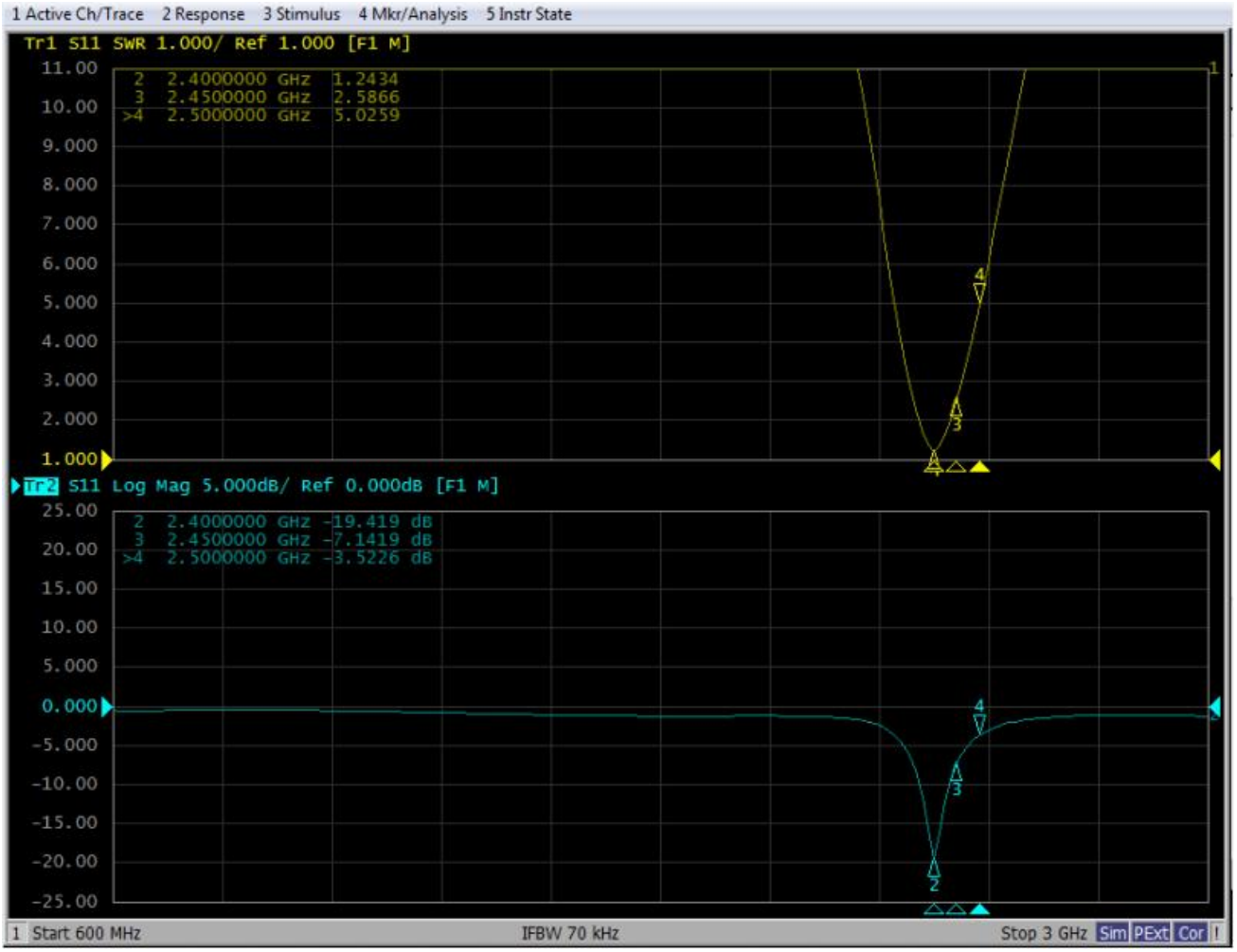

Efficiency/Gain/Pattern:

Freq (MHz)	Effi (%)	Effi (dB)	Gain (dBi)
2400	9.79	-10.09	-6.46
2410	9.44	-10.25	-6.54
2420	9.22	-10.35	-6.82
2430	9.8	-10.09	-6.48
2440	9.27	-10.33	-6.75
2450	10.44	-9.81	-6.11
2460	8.41	-10.54	-6.92
2470	9.63	-10.16	-5.89
2480	8.85	-10.53	-6.13
2490	9.88	-10.05	-5.28
2500	7.5	-11.25	-6.33

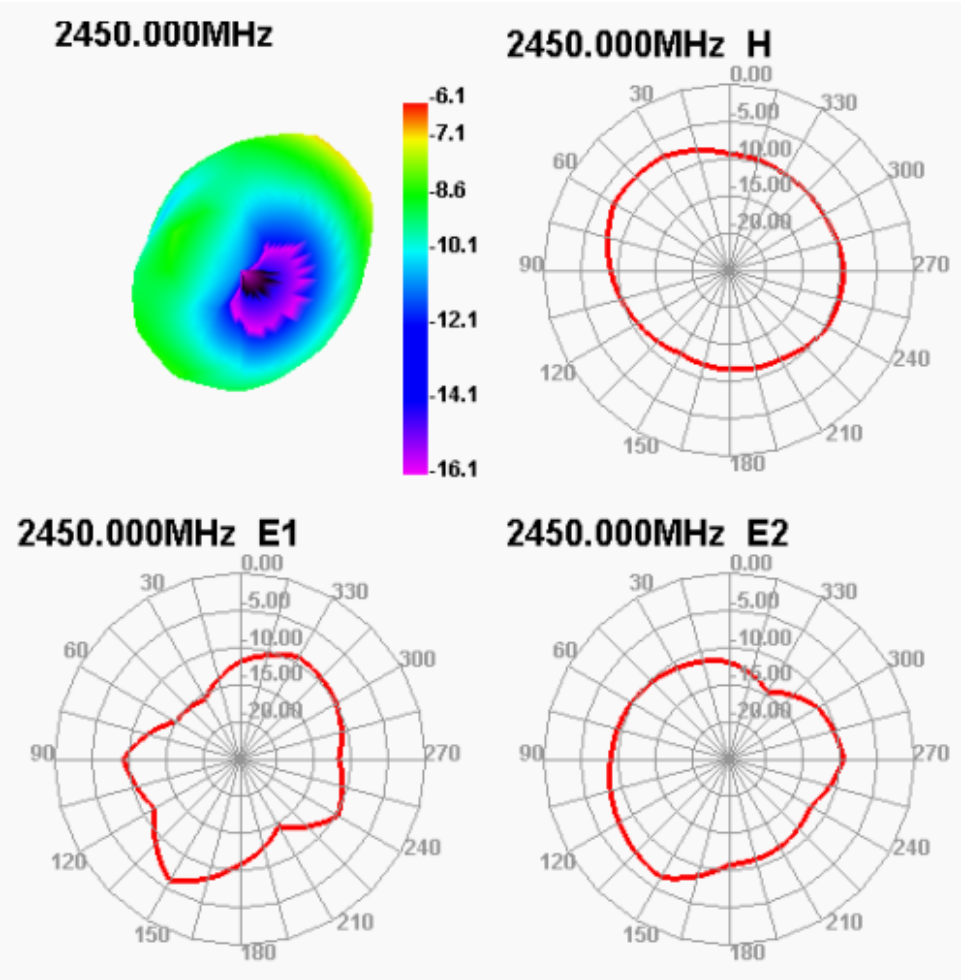

3、Reliability and Test Condictions

<table>
<tr><th>ITEM</th><th>REQUIREMENTS</th><th>TEST CONDITION</th></tr>
<tr><td>Solderability</td><td>1. Wetting shall exceed 90% coverage
2. No visible mechanical damage
TEMP (C)
 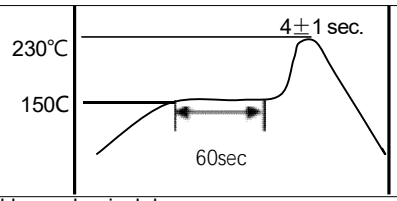
</td><td>Pre-heating temperature:150C/60sec.
Solder temperature:230±5C
Duration:4±1sec.
Solder:Sn-Ag3.0-Cu0.5
Flux for lead free: rosin</td></tr>
<tr><td>Solder heat Resistance</td><td>1. No visible mechanical damage
2. Central Freq. change :within ± 6%
TEMP (C)
 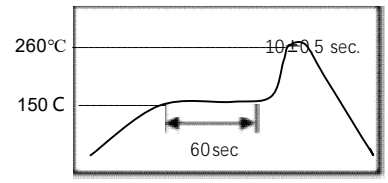
</td><td>Pre-heating temperature:150C/60sec.
Solder temperature:260±5C
Duration:10±0.5sec.
Solder:Sn-Ag3.0-Cu0.5
Flux for lead free: rosin</td></tr>
<tr><td>Component Adhesion (Push test)</td><td>1. No visible mechanical damage</td><td>The device should be reflow soldered(230±5C for 10sec.) to a tinned copper substrate A dynometer force gauge should be applied the side of the component. The device must with-ST-F 0.5 Kg without failure of the termination attached to component.</td></tr>
<tr><td>Component Adhesion (Pull test)</td><td>1. No visible mechanical damage</td><td>Insert 10cm wire into the remaining open eye bend ,the ends of even wire lengths upward and wind together.
Terminal shall not be remarkably damaged.</td></tr>
<tr><td>Thermal shock</td><td>1. No visible mechanical damage
2. Central Freq. change :within ±6%
<table><tr><th>Phase</th><th>Temperature(C)</th><th>Time(min)</th></tr><tr><td>1</td><td>+1 10±5C</td><td>30±3</td></tr><tr><td>2</td><td>Room Temperature</td><td>Within 3sec</td></tr><tr><td>3</td><td>-4 0±2C</td><td>30±3</td></tr><tr><td>4</td><td>Room Temperature</td><td>Within 3sec</td></tr></table></td><td>+110C=>30±3min
-40C=>30±3min
Test cycle:10 cycles
The chip shall be stabilized at normal condition for 2~3 hours before measuring.</td></tr>
<tr><td>Resistance to High Temperature</td><td>1. No visible mechanical damage
2. Central Freq. change :within ±6%
3. No disconnection or short circuit.</td><td>Temperature: +110±5C
Duration: 1000±12hrs
The chip shall be stabilized at normal condition for 2~3 hours before measuring.</td></tr>
<tr><td>Resistance to Low Temperature</td><td>1. No visible mechanical damage
2. Central Freq. change :within ±6%
3. No disconnection or short circuit.</td><td>Temperature:-40±5C
Duration: 1000±12hrs
The chip shall be stabilized at normal condition for 2~3 hours before measuring.</td></tr>
</table>

Humidity	1. No visible mechanical damage 2. Central Freq. change :within ±6% 3. No disconnection or short circuit.	Temperature: 40±2℃ Humidity: 90% to 95% RH Duration: 1000±12hrs The chip shall be stabilized at normal condition for 2~3 hours before measuring.

4、Soldering and Mounting

Mildly activated rosin fluxes are preferred. The minimum amount of solder can lead to damage from the stresses caused by the difference in coefficients of expansion between solder, chip and substrate.

The terminations are suitable for all wave and re-flow soldering systems.Ifhand soldering cannot be avoided, the preferred technique is the utilization of hot air soldering tools

Reflow Soldering

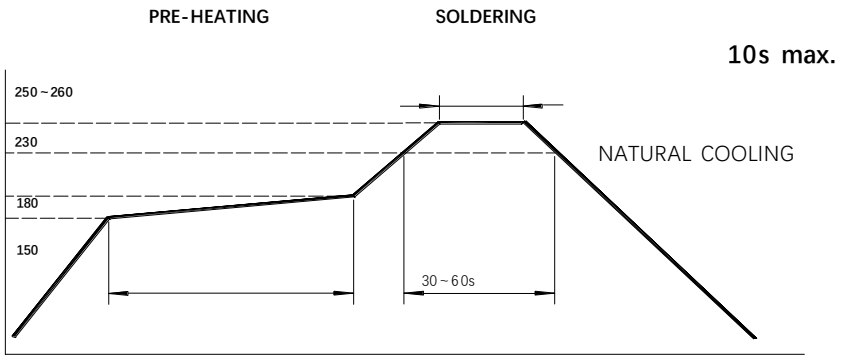

Iron Soldering

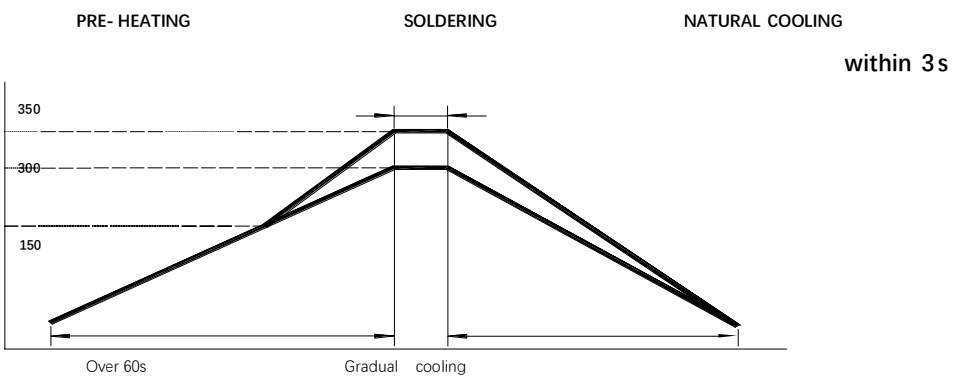

Recommended temperature profiles for re-flow soldering in Figure 1.

Products attachment with a soldering iron is discouraged due to the inherent process control limitations. In the event that a soldering iron must be employed the following precautions are recommended.

. Preheat circuit and products to 150C

. Never contact the ceramic with the iron tip

. Use a 20 watt soldering iron with tip diameter of 1.0mm

.280C tip temperature (max)

. 1.0mm tip diameter (max)

. Limit soldering time to 3 sec.

5、A1608C2G42M100-02 ceramic chip antenna user reminder

1. The chip antenna is made of ceramic material, which is more rigid and brittle compared to the printed circuit board material. Bending of the circuit board where the chip antenna is located may cause cracking of the solder joint or the antenna itself.

2. The antenna should be placed at the corner of the PCB with sufficient clearance from other circuits and never place any components, planes, mounting screws or traces within the antenna exclusion zone of all layers, the actual forbidden area depends on the antenna used.

3. Ceramic antenna as a built-in antenna, should try to avoid the influence of the circuit board metal and shell, so direct use often has performance problems, can not be directly used, must be for their own products to debug.

4. Caution should be exercised when ultrasonic welding is required near the position of the chip antenna. Strong ultrasonic vibration may cause the chip antenna solder to crack.

5. The data shown above are measured on a reference PCB(ground) as shown in this specification. When the antenna position or size of the PCB changes, the antenna performance and the values of the matching elements may differ from the data shown here.

6. The information provided in this reference is considered to be correct as of the date of publication. GuangDong DBT Technology Co., LTD reserves the right to change the reference specifications without notice due to technical improvement and other reasons. Please consult the company's engineering team for the latest information before using this product. Depending on the customer's requirements, we can provide advice and assistance for the installation of this antenna on the customer's equipment by performing simulated or actual measurements on the equipment of interest in our test facility.