A7 mini Pro User Manual

Please read this instruction manual carefully before using the product and keep it in a safe place.

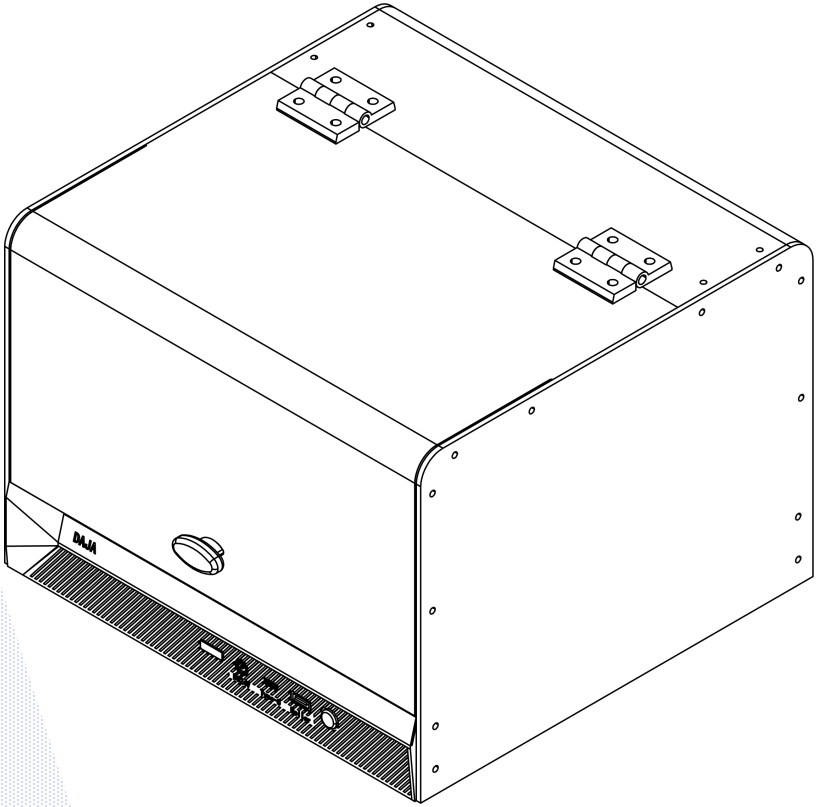

Model: A7 mini Pro

Catalogs

Safety Precautions 04
Accessory Details 06
Product Parameters 07
Products 08
Safety Protection Functions 12
Laser module focusing method 14
Software Acquisition and Installation 16
PC software function introduction 17
Image Editing 20
Text Editing 21
Vector Graphics Editing 22
Barcode Editing 23
Preview and Mark 24
Mobile APP download and connection 25
Mobile APP Function Introduction 27
Image Editing 28
Text Editing 32
Serial number edit 35
Contour Engraving and Cutting 38
Start carving 39
LightBurn Software connectivity 40
FAQ 44

Safety Precautions

In order to prevent damage to your personal and property safety, and so that you can use this product safely and correctly, please read the instruction manual carefully and follow the steps in the instruction manual.

Safety Precautions

★Before operating the equipment, the user must read the instruction manual carefully and strictly follow the operating procedures.

★Laser processing can be risky and the user should carefully consider whether the object to be processed is suitable for laser work.

★Processing objects and emissions should comply with local laws and regulations.

*This equipment uses a Class IV laser (strong laser radiation), which may cause the following conditions:

①Ignition of flammable materials in the vicinity;

②During laser processing, other radiation and toxic and hazardous gases may be generated depending on the object to be processed.;

③Direct exposure to laser radiation can cause human injury, the use of the place must be equipped with fire-fighting equipment, prohibited in the workbench and equipment around the stacking of flammable, explosive substances, while making sure to maintain good ventilation.

*The environment where the equipment is located should be dry, no pollution, no vibration, no strong electricity, strong magnetism and other interference and influence. Working environment temperature 10-35 ℃, working environment humidity 5-95% (no condensation)

★Equipment working voltage: AC100-240V.

*The engraving machine and any other equipment associated with it must be safely grounded before it can be turned on and operated.

★When the equipment is on, it needs to be guarded throughout the whole process, and all power must be cut off before the personnel leave to prevent abnormal conditions from occurring, and if it happens, please disconnect the power supply immediately to deal with it!

*It is strictly prohibited to place any irrelevant fully reflective or diffusely reflective objects in the device to prevent the laser from reflecting on the human body or flammable objects.

*The equipment should be kept away from electrical equipment that is sensitive to electromagnetic interference and may cause electromagnetic interference to it.

*There is high pressure or other potential danger inside the laser device, and disassembly by non-professionals is strictly prohibited.

*Caution use of controls or adjustment of performance of procedures other than those specified herein may result in hazardous radiation exposure

Security instructions

1. The brightness of the laser is harmful to the eyes, so please do not look directly at the laser.

2. Hands should not be close to the machine when it is working to avoid injury.

3. When the laser is turned on, it should not be directed at people, animals or flammable objects to avoid skin burns and fires.

4. Turn the machine off when it is not in use to avoid misuse by third parties.

Maintenance and upkeep

Laser modules are consumables;

suggestion:
Turn off the machine for 5 minutes after 1 hour of cutting;
Turn off the machine for 5 minutes after 2 hours of engraving.。

1. Do not use the machine in humid/high temperature conditions.
2. Do not operate the machine by touching it with wet hands.
3, the machine's lens, please regularly wipe with a cotton swab dipped in alcohol, is conducive to the protection of the lens.

Accessory Details

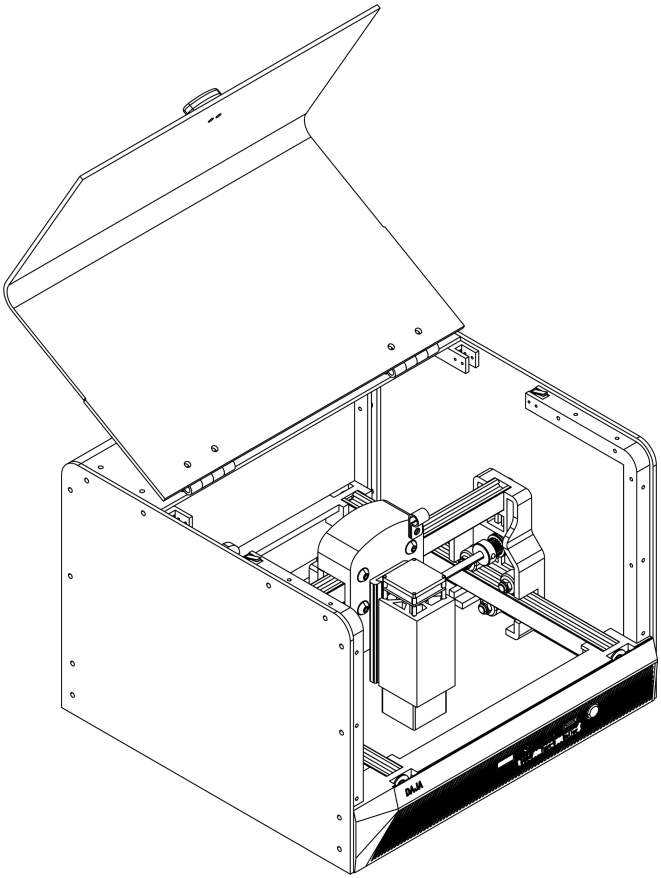

Standard accessories

Power supply

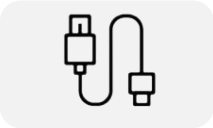

Type-c data cable

Glasses

U disk

Hexagonal wrench

User Manual

Optional accessories

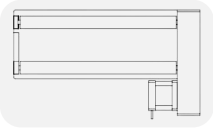

RT5 Roller

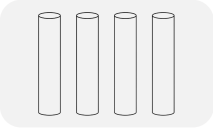

Heightening

Product Parameters

Product Model	A7 mini Pro
Main material	ABS+ High Strength Metal
laser wavelength	Blue light: 455nm Infrared light: 1064nm
Engraving speed	8000mm/min
Laser lifetime	>10000h (at 27°C ambient temperature)
Focus mode	fixed focal length
Engraving area	120*120mm
Engraving precision	±0.1mm
Engravable Materials	Blue light can engrave most non-metallic materials, non-transparent materials (paper, wood chips, plastic, leather, fabric, cardboard, leather) Infrared light can engrave all metal materials and some non-metallic materials
Machine power	≤ 60W
Input Voltage	DC 24V 2.5A
Data transfer	USB wired transmission, Bluetooth wireless transmission
Cooling method	air cooling
support system	DJLaser software (windows、macOS、Android、IOS) LightBurn software (windows、macOS)
Supported formats	picture format: JPEG/BMP/JPG/PNG vector format: DXF/PLT
Machine net weight	2.3KG
Machine Size	281*298*205mm (L*W*H)

Products

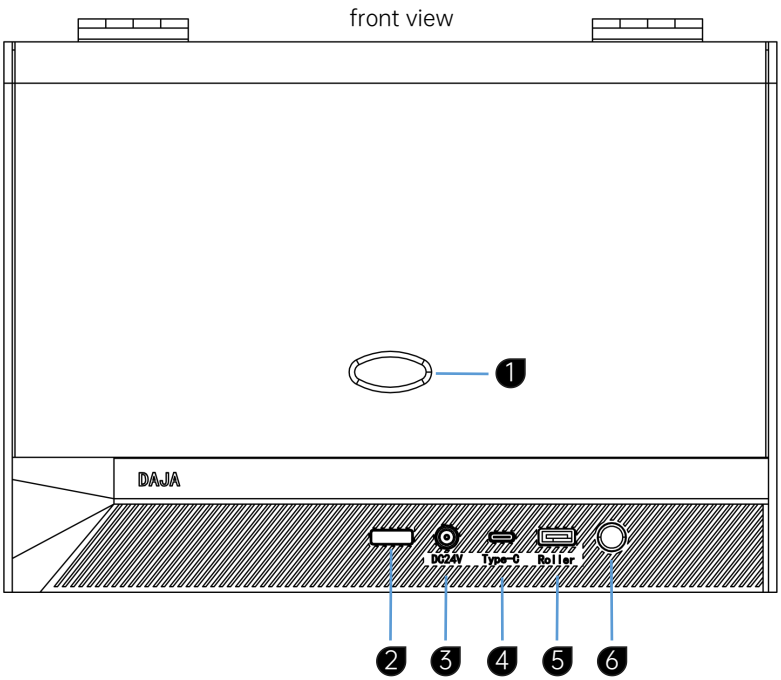

1. Safety Door Handle
2. status indicator

   1.Blue light is always on: power on state;

   2.Green light is always on: the software is connected;

   3.Green light flashing: Engraving work in progress.

   4.Red light blinking: alarm status;

   Tip: In the alarm state; the machine is unable to preview and engrave operations.
3. 24V2.5A power input
4. tpye-c connection to computer
5. Connecting Roller
6. Power switch

   1. Short press to turn on the power;

   2. When the power is on, press and hold for 1 second to turn off the power.

   3. Press twice quickly to reset the machine.

Products

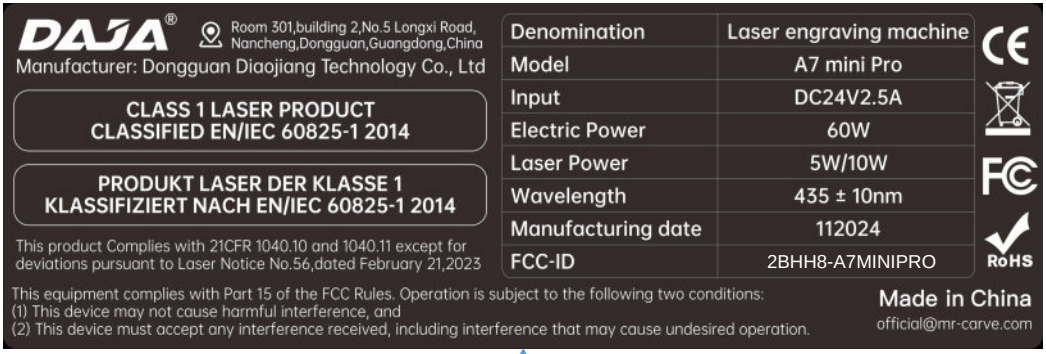

DAJA®

Room 301,building 2,No.5 Longxi Road, Nancheng,Dongguan,Guangdong,China

Manufacturer: Dongguan Diaojiang Technology Co., Ltd

CLASS 1 LASER PRODUCT
CLASSIFIED EN/IEC 60825-1 2014

PRODUKT LASER DER KLASSE 1
KLASSIFIZIERT NACH EN/IEC 60825-1 2014

This product Complies with 21CFR 1040.10 and 1040.11 except for deviations pursuant to Laser Notice No.56,dated February 21,2023

Denomination	Laser engraving machine
Model	A7 mini Pro
Input	DC24V2.5A
Electric Power	60W
Laser Power	5W/10W
Wavelength	435 ± 10nm
Manufacturing date	112024
FCC-ID	2BHH8-A7MINIPRO

This equipment complies with Part 15 of the FCC Rules. Operation is subject to the following two conditions:
(1) This device may not cause harmful interference, and
(2) This device must accept any interference received, including interference that may cause undesired operation.

Made in China

official@mr-carve.com

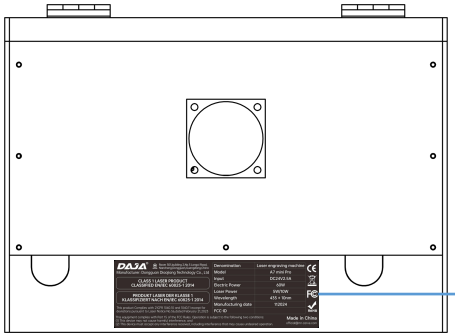

rear view

Products

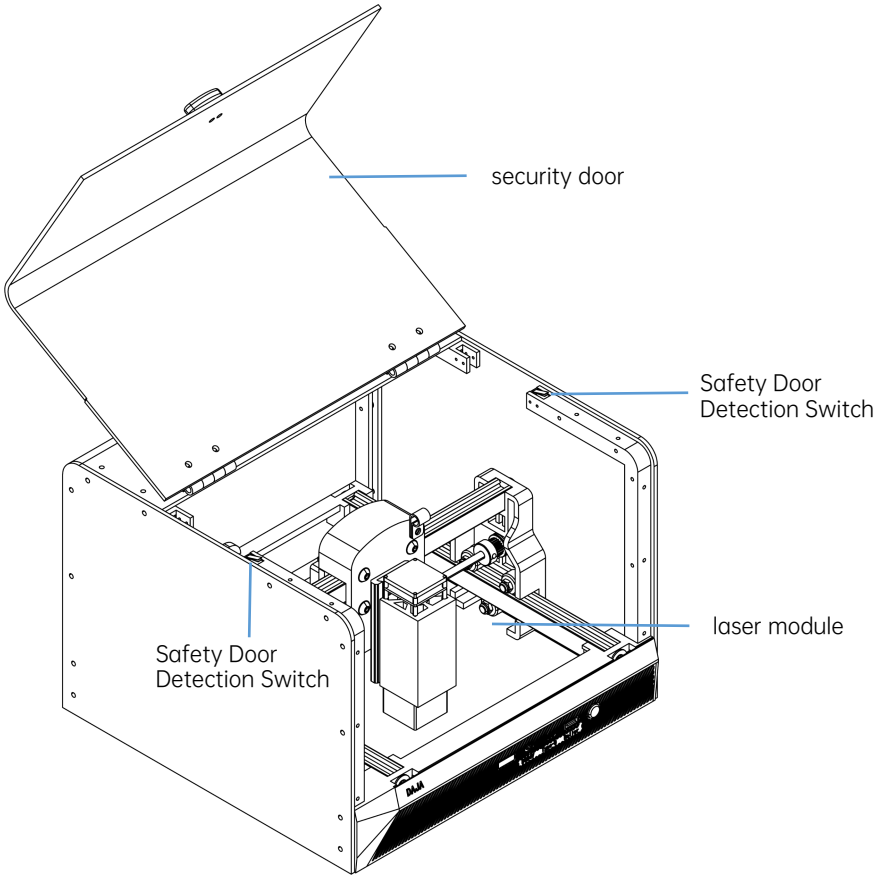
security door
Safety Door
Detection Switch
laser module
Safety Door
Detection Switch

Products

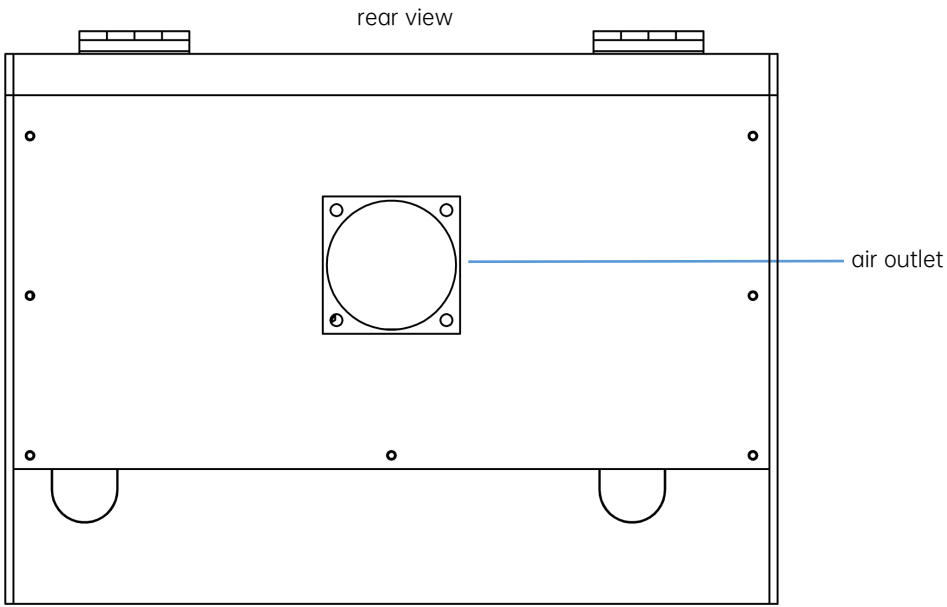

Safety Protection Functions

【Description of tilt protection function】

When the host machine is tilted to a certain angle with the horizontal plane and maintained for more than 1 second, the machine will stop running immediately, the laser module will stop laser output, and enter the protection state. The machine must be level to resume normal function. (This function can be turned off in the settings)

Tip: Machine tilts，status indicator flashes red.

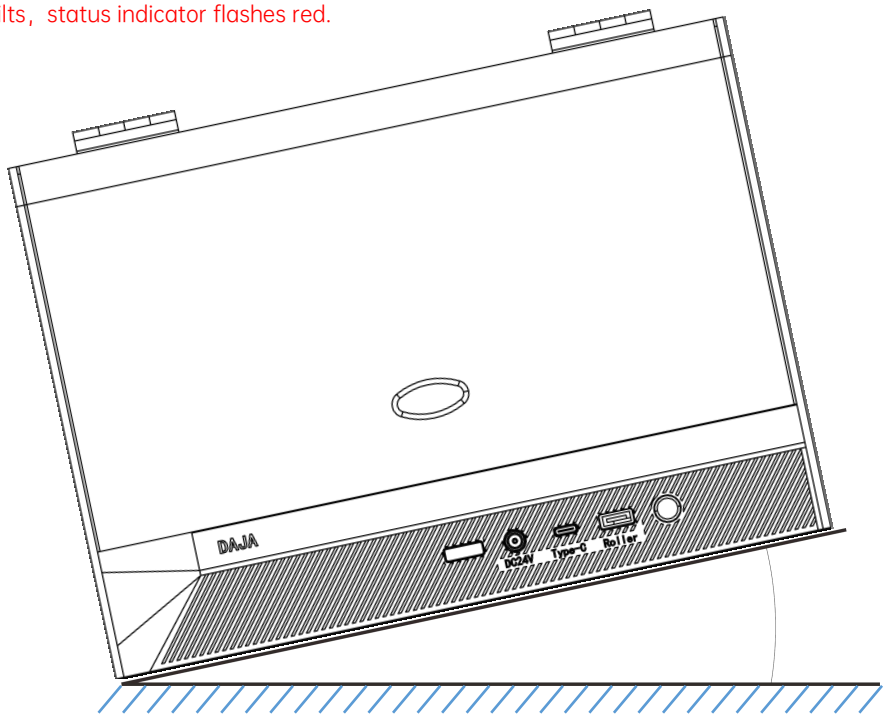

Safety Protection Functions

【Functional description of the safety gate】

When operating the machine, be sure to put down the light shield, otherwise the machine can not be controlled; During the engraving process, the safety door lifting status will cause the laser module to stop outputting laser light immediately. (This function can be turned off in the settings)

Tip: Safety door open，status indicator flashes red.

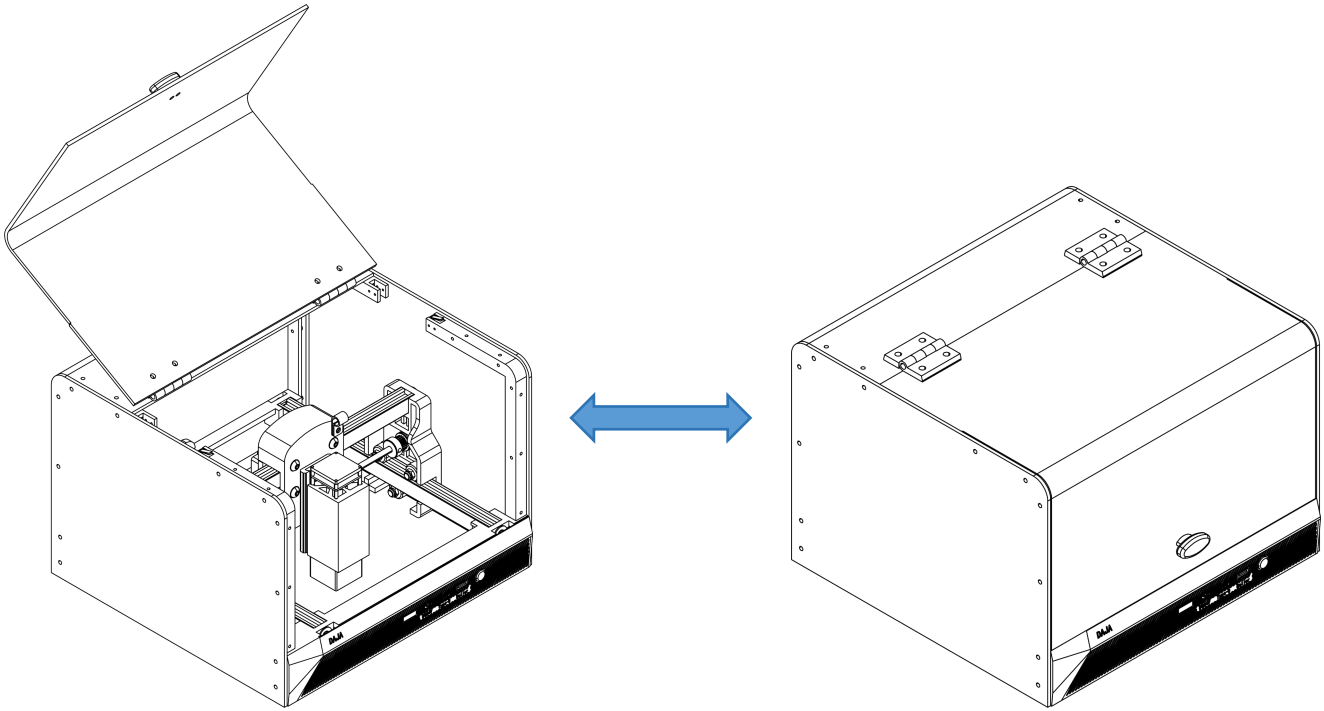

Laser module focusing method

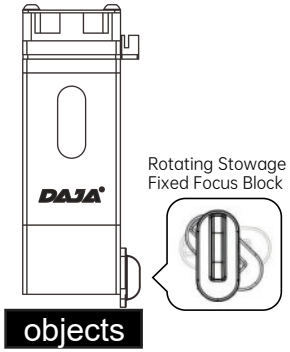

5W Blue Laser Module

Focus mode: fixed focus

Rotate the focusing block, the best focus is when the block touches the surface of the object.

Adjusting focus is paramount.

1. The fixed focus block touches the surface of the object as the best focus point.
2. The distance has to be readjusted for carving objects of different heights.

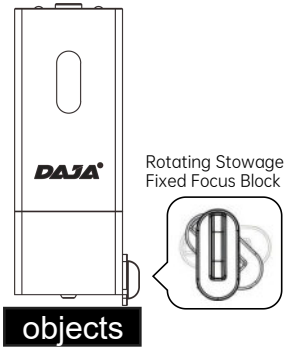

10W Blue Laser Module

Focus mode: fixed focus

Rotate the focusing block, the best focus is when the block touches the surface of the object.

Adjusting focus is paramount.

1. The fixed focus block touches the surface of the object as the best focus point.
2. The distance has to be readjusted for carving objects of different heights.

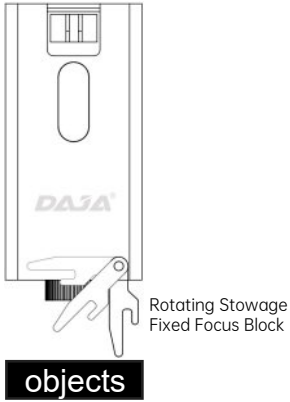

1W Infrared Laser Module

Focus mode: fixed focus

Adjusting focus is paramount:

1. The fixed focus block touches the surface of the object as the best focus point.
2. The distance has to be readjusted for carving objects of different heights.

Note: Laser module is an optional accessory, the actual purchase shall prevail.

Laser module focusing method

3, the laser head down, fixed focus block touches the engraved product, first counterclockwise turn the set screw (step 2), and then collect the fixed focus block (step 1).

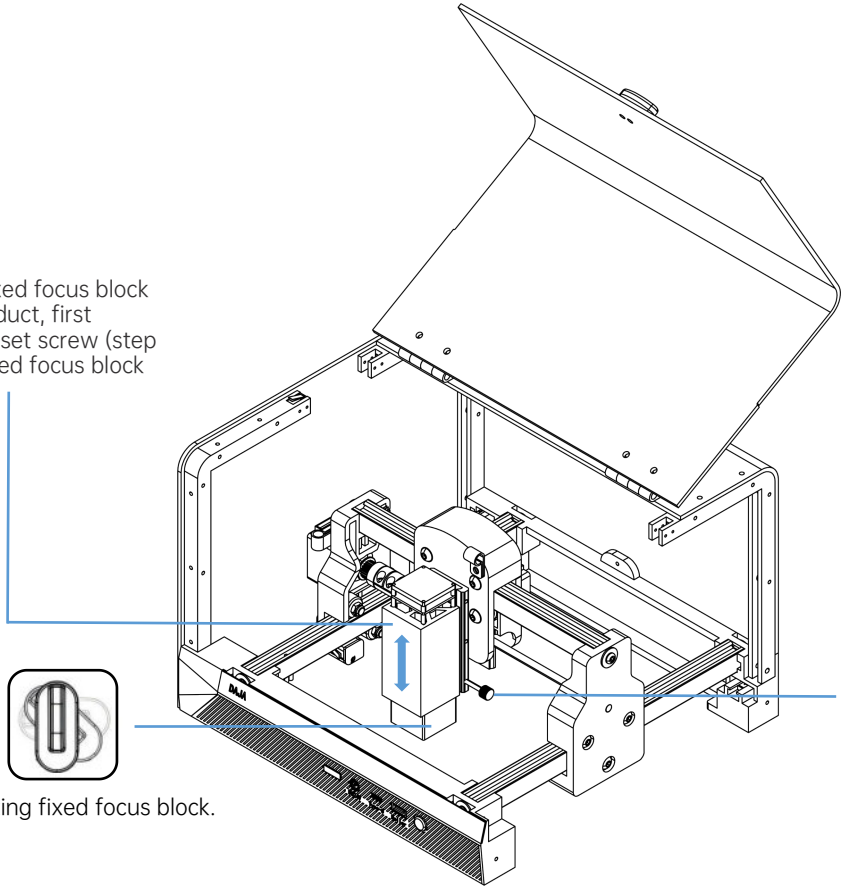

2. Loosen the screws clockwise .

1、Rotating fixed focus block.

Software Acquisition and Installation

Method 1:

1. Install the U disk drive file "*1 driver*" "copied to the computer desktop, open the folder, double-click"*dpinst.exe* "to install the driver
2. "*2 software*" copied to the computer desktop, open the folder, double-click "*DJLaser.exe*", after installation to start the software;

Method 2:

Please go to our website: *mr-carve.com/pages/software-and-manual* to find the corresponding machine model for download.

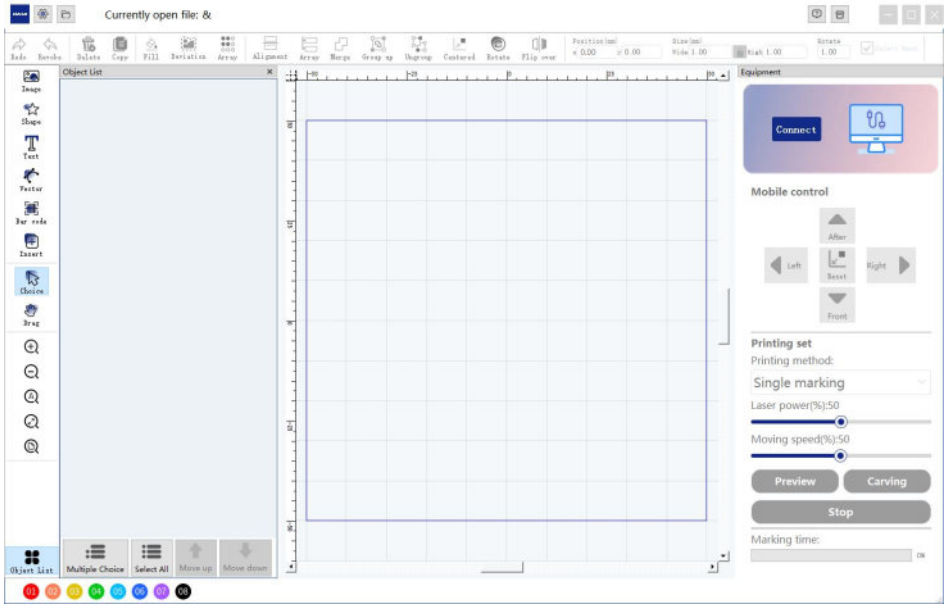

software interface

PC software function introduction

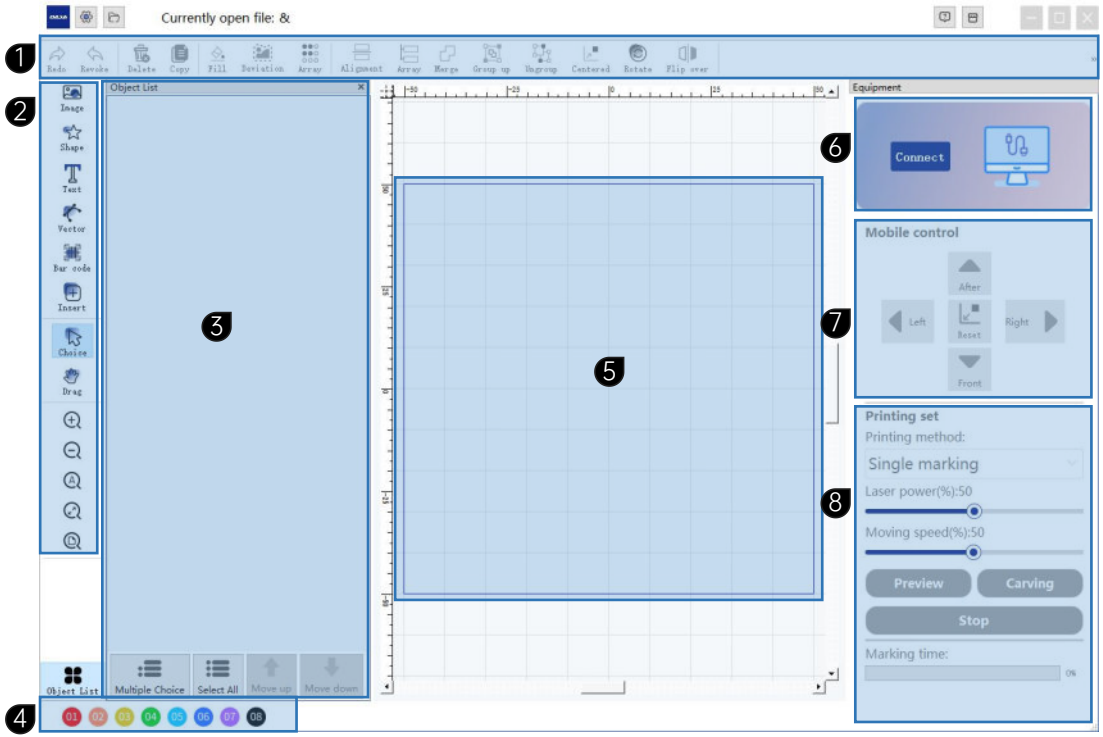

1. System Toolbar
2. Drawing Toolbar
3. Object list area
4. Layer Selection Area
5. Engraving workspace
6. Connection Status Area
7. Mobile Control Area
8. Engraving control area

PC software function introduction

❶ System Toolbar

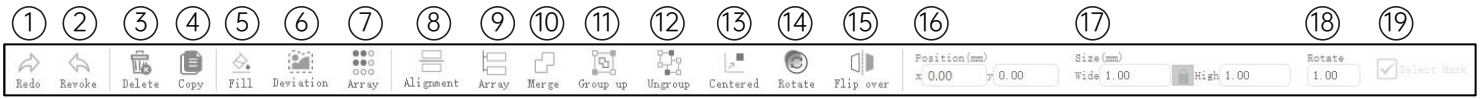

① Redo

② Revocation

③ delete

④ copy

⑤ Fill: Support text or vector graphics in dxf and plt formats

⑥ Offset: offset the contour line. This function is suitable for cutting.

⑦ Array

⑧ Alignment: Multiple contents can be aligned

⑨ arrangement

⑩ merge

⑪ Grouping: combining multiple objects

⑫ Ungroup: Dissolve the group

⑬ Center: Center the selected object in the engraving area

⑭ Rotation

⑮ Flip: Mirror horizontally or vertically

⑯ Position: The coordinates of the object in the engraving area

⑰ Size: Object engraving size

⑱ Rotation Angle

⑲ Select Marking

PC software function introduction

❷ Drawing Toolbar

① Importing image files

② Draw a shape

③ Draw Text

④ Importing vector files

⑤ Draw QR code and barcode

⑥ Insert library material

⑦ Select content

⑧ Drag the engraving area

⑨ Enlarge the engraving area

⑩ Reduce the engraving area

⑪ Show All Objects

⑫ View Selected Objects

⑬ Show Engraving Area

❸ Object list area

Display all objects in the engraving area.

❹ Layer Selection Area

Different layers can set different engraving parameters, which can realize engraving and cutting.

❺ Engraving workspace

The engraving content is displayed. The engraving object should not exceed the blue boundary line. The blue boundary line is the engraving area of the machine.

❻ Connection Status Area

After the device is connected, the device model and picture will be displayed.

❼ Mobile Control Area

The laser head position can be moved and the machine reset.

❽ Engraving control area

You can select roller engraving, adjust laser power and speed, preview the frame and start engraving.

set

Language selection, after connecting the device, you can turn on or off: anti-tilt and cover opening emergency stop functions.

Note: The cover opening emergency stop function is only available on devices with safety doors.

Image Editing

1. Plug in the machine and turn it on, connect the data cable to the computer, open the software, and click Connect Device.
2. Click "Image" on the drawing toolbar to import the image file to be engraved.
3. Select the object and adjust the engraving size.
4. Adjust the image's brightness, contrast, sharpness, and inversion as needed.
5. Mode selection:

   Black and white: black and white processing of pictures

   Engraving character photos: grayscale, sketch, cartoon 1-2 modes available

   Contour: Contour cutting mode

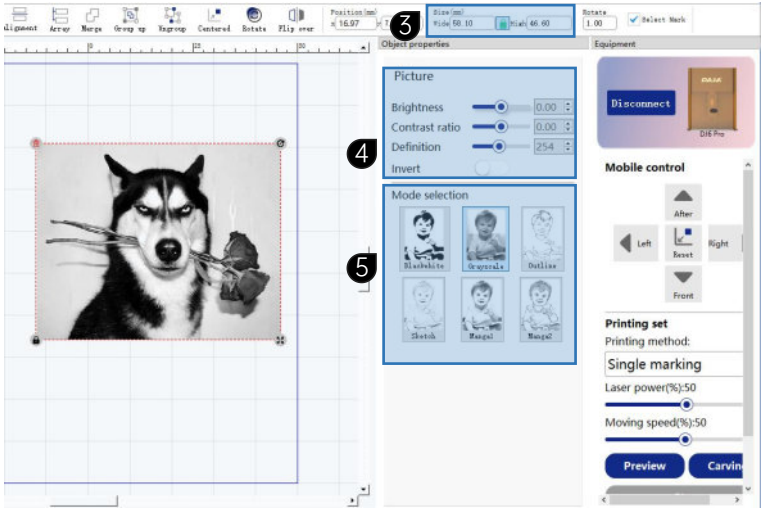

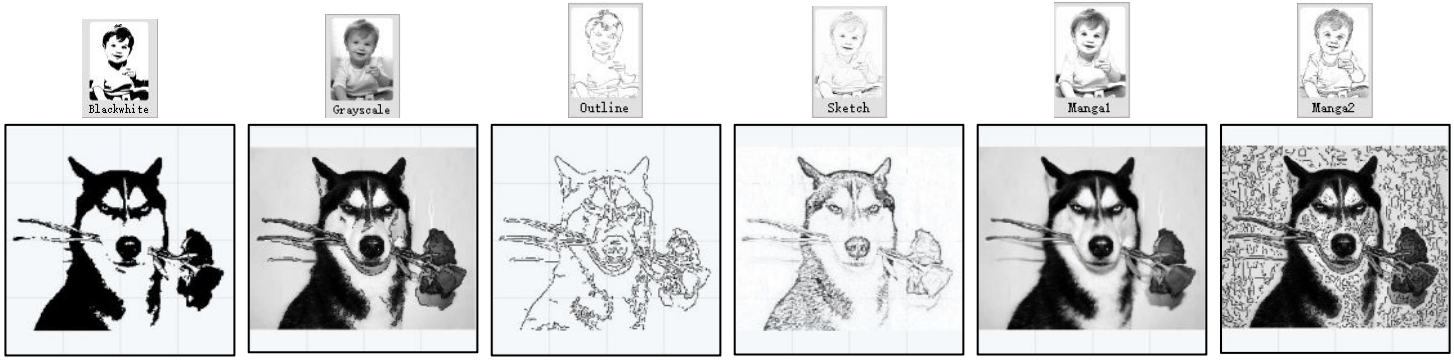

Text Editing

1. Click "Text" on the drawing toolbar and enter text.
2. Select the object and modify the engraving size.
3. The text content can be modified twice.

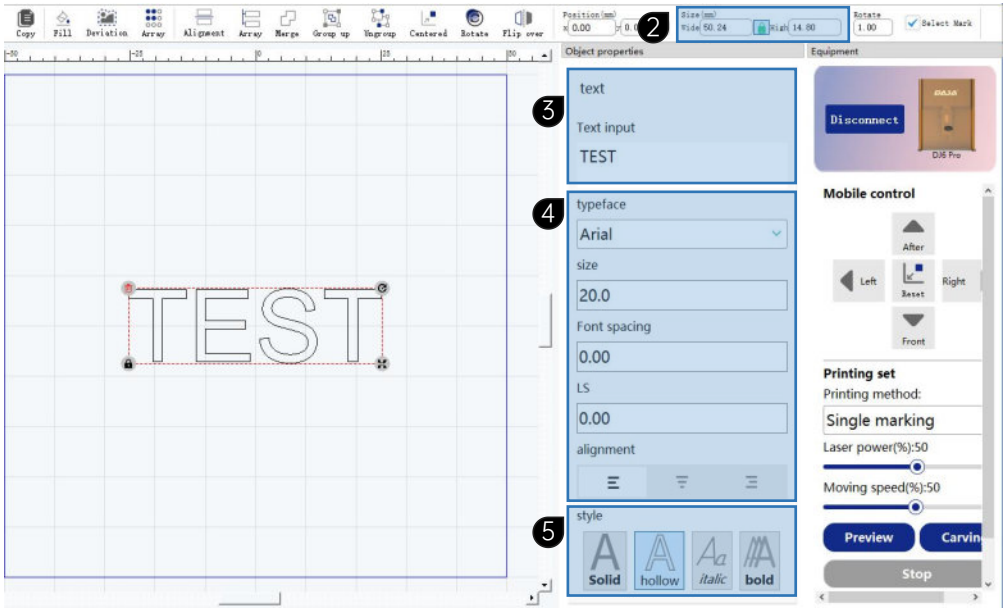

4. You can modify the font, size, spacing, leading, and alignment.
5. Solid: Fill carving mode.

   Hollow: Contour cutting mode

   Italic

   Bold

Vector Graphics Editing

1. Click "Vector" on the drawing toolbar to import vector files, supporting DXF and PLT formats.
2. Click Fill, if not filled it is outline mode.
3. Select the object and modify the engraving size.

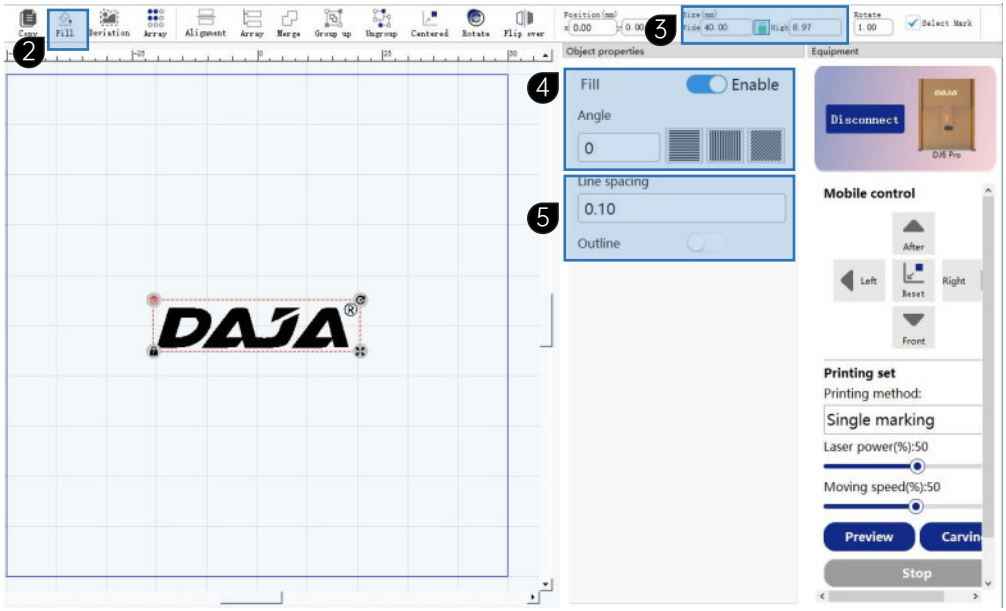

4. Enable fill, and modify fill type and angle.
5. Line spacing: The default value is 0.1. The smaller the value, the higher the accuracy and the slower the speed.

Barcode Editing

1. Click "Bar code" on the drawing toolbar and select "QR Code" or "Bar code".
2. Select the object and modify the engraving size.
3. The encoding type can be modified.

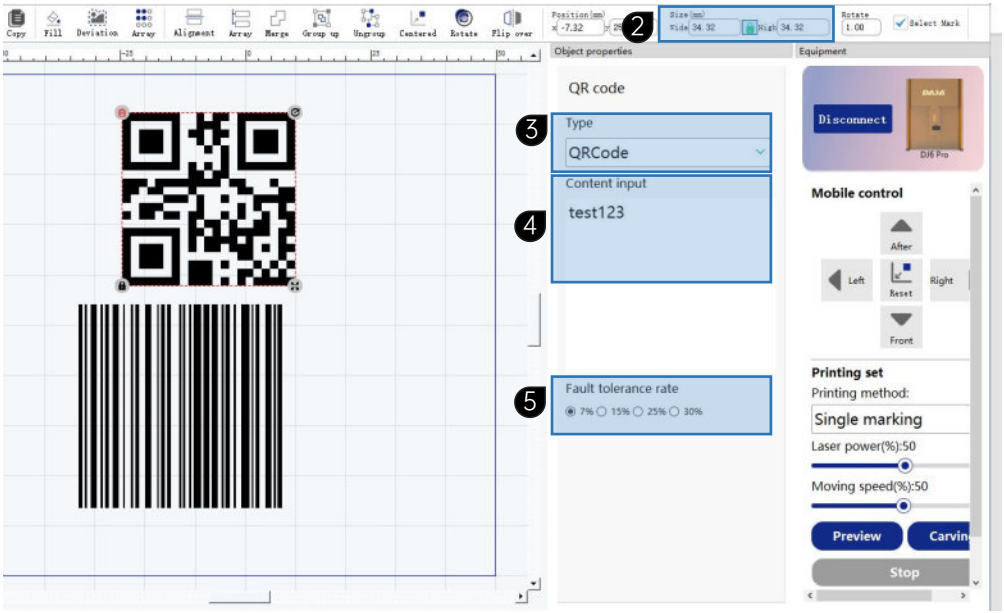

4. The content can be edited again.
5. The error tolerance rate refers to the ability of a QR code to be scanned normally after a part of it is blocked. The higher the error tolerance rate, the larger the part of the QR code image can be blocked.

Preview and Mark

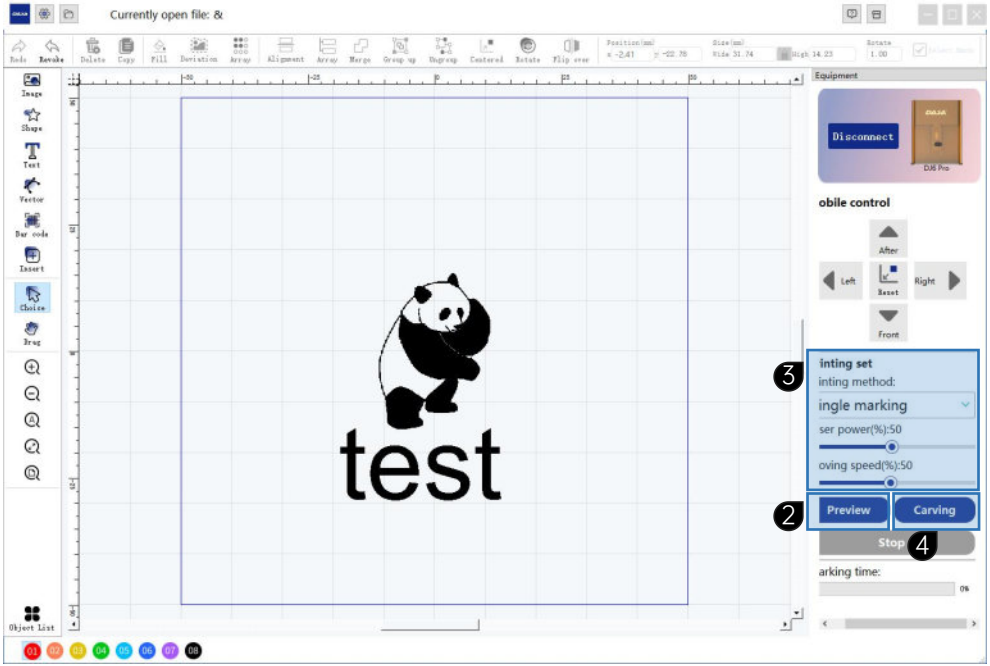

1. Fix the engraving focal length. Refer to page P14 for " Laser module focusing method".
2. Preview the frame and position the object for engraving.
3. Laser power: control the power output of the laser head;

   Movement speed: control the engraving speed;

   The faster the movement speed, the lighter the color of the engraving will be.
   The slower the movement speed, the darker the color of the engraving will be.
4. Start carving

Tips: Please read the "Safety Precautions" on page 4 carefully before starting to carve.

Mobile APP download and connection

1、Scan the following QR code to download the mobile app

google play

IOS

DJLaser

System requirements: Android:7.0+, IOS:13.0+

Note:
1, Android phones need to use the mobile browser to scan the QR code to download;
2, after successful installation you need to give relative permissions;

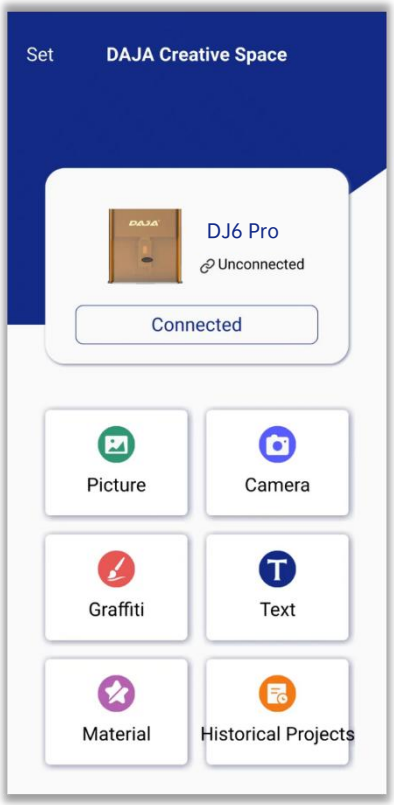

app interface

1. Plug the machine into the power supply and turn on the Bluetooth function on your phone.

2. Click [Connected] and find A7miniPro_xxx in the Bluetooth list; click Connect;

3、After successful connection, the device appearance picture and connection status will be displayed.

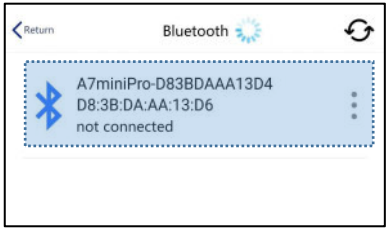

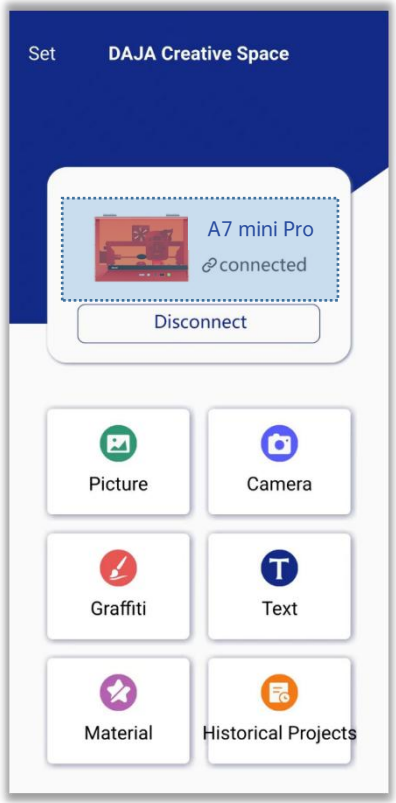

Note:
After the app is connected, the phone please do not rest the screen, answer the phone call, switch the app to the background of the phone, if any of the above operations to do will lead to the connection is not responsive, if the operation is not responsive, please exit the cell phone app completely, and then repeat the steps 1-3 to re-try to connect.

Mobile APP Function Introduction

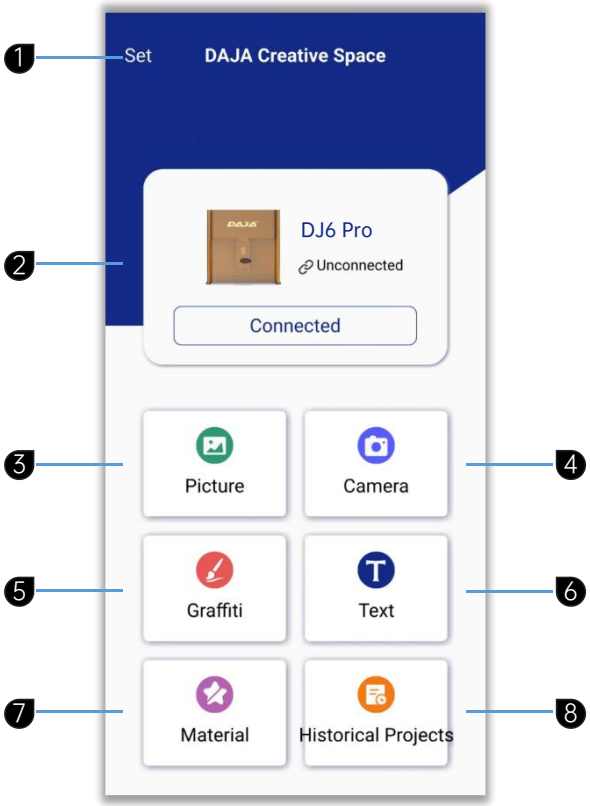

1 Set

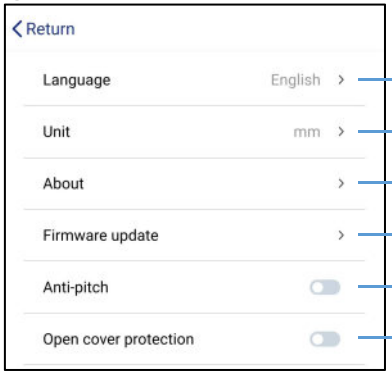

- Language Switching
- Unit Switching
- Check the firmware version
- Firmware Update
- Anti-tilt switch
- Safety door switch

Tip: This option will not be displayed when a device without a safety door is connected.

2 Device connection status

3 Import album image files

4 Take a photo and import the image file

5 Hand-painted brushes

6 Text Editing Engraving

7 Sculpture Library

8 View Historic Engraving Project

Image Editing

1. Click "Picture" to select a picture file.

2. After importing the picture, enter the photo editing interface to crop and erase the picture content.

3. Next step enter the editing interface

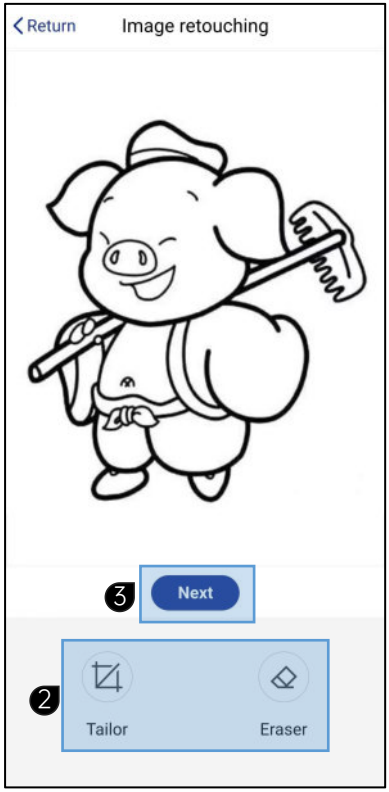

Image Editing

❶ Revocation

Redo

delete

1:1 display

Maximize Display

❷ Working area: Do not exceed the engraving area.

❸ delete

Rotation

Lock ratio

Drag to zoom in and out

❹ Adjustment of contrast and brightness.

❺ Mode selection: For portrait photos, choose grayscale or sketch.

❻ Mirror and invert images.

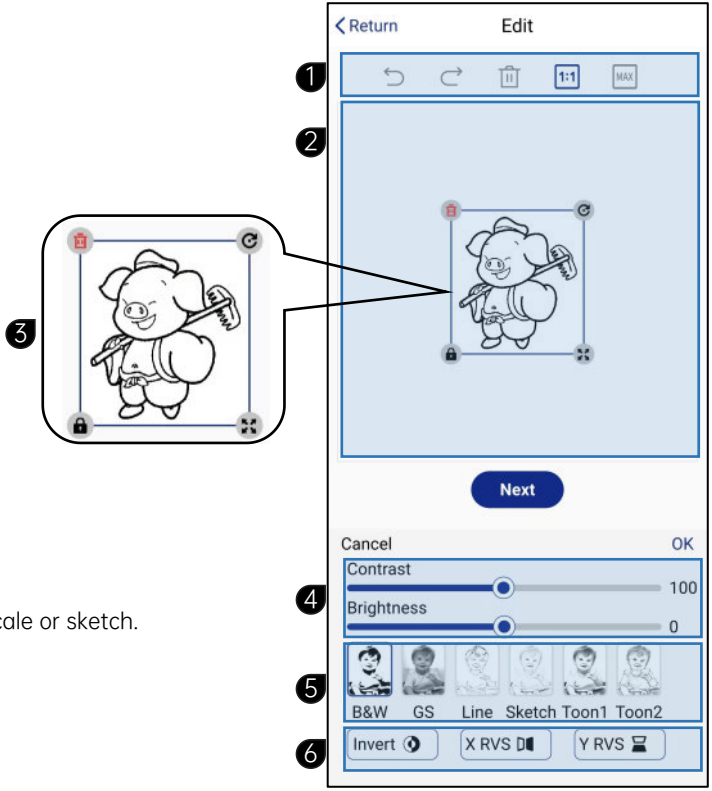

Image Editing

❶ Multiple content engraving can be added.

❷ Add a picture

Add text

Add stock images

Add a QR code or barcode.

Add DXF and PLT format vector files

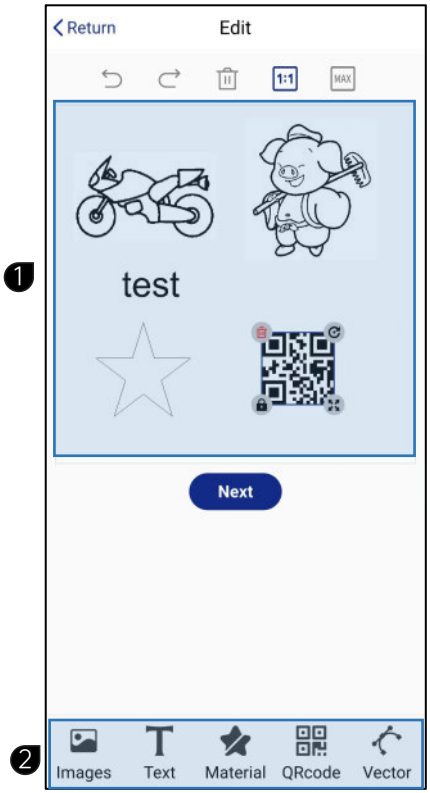

Image Editing

1. Resize the carving
2. If a rotating roller is connected, please check "Rotating axis engraving"
3. Preview laser intensity: Default is 5%, if it is too bright, reduce it appropriately, otherwise increase it
4. Border preview positioning
5. Next step enter the engraving interface

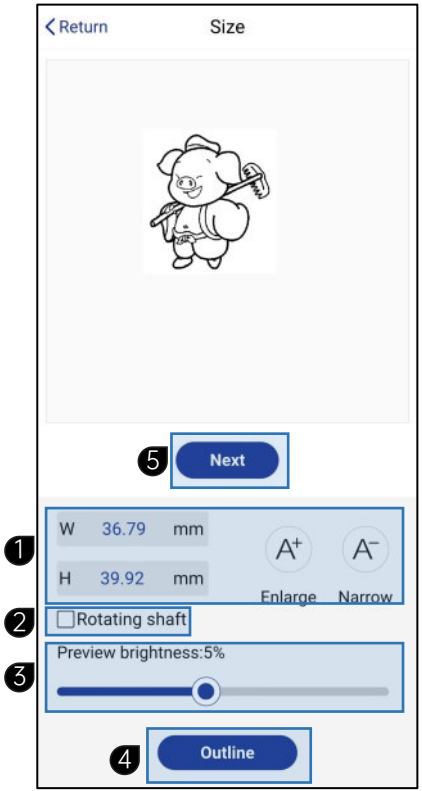

Text Editing

1. Select text
2. Enter text content

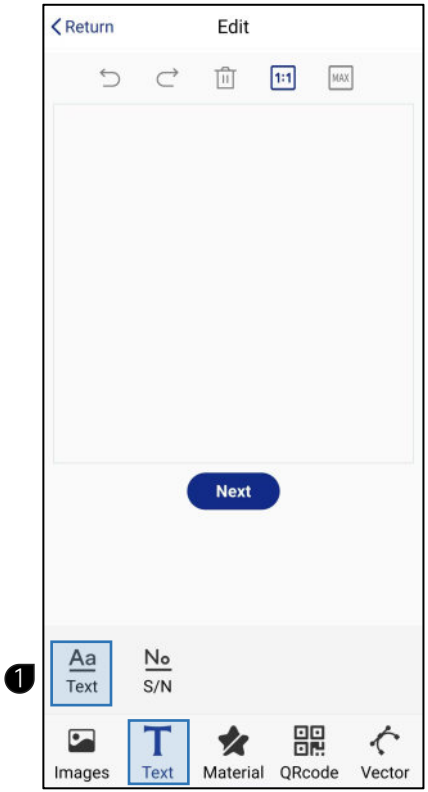

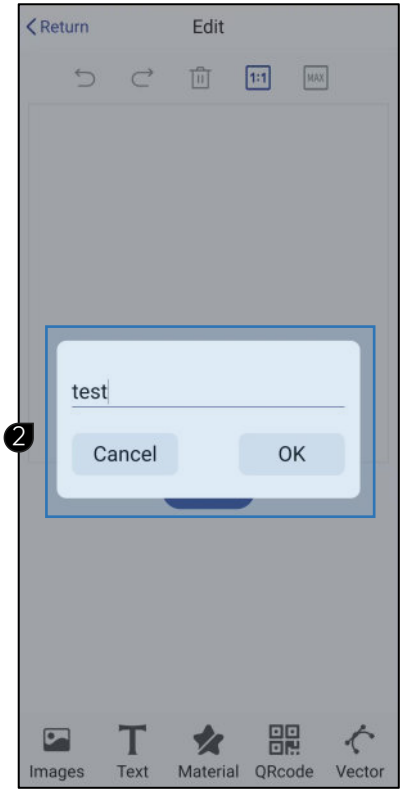

Text Editing

1. Click to edit the text again
2. You can modify the font, alignment, spacing, and size
3. Solid: Fill mode

   Hollow Out: Outline Edge Mode

   Italic

   Bold
4. Font Selection
5. Multiple content engraving can be added.

   Add a picture

   Add text

   Add stock images

   Add a QR code or barcode.

   Add DXF and PLT format vector files

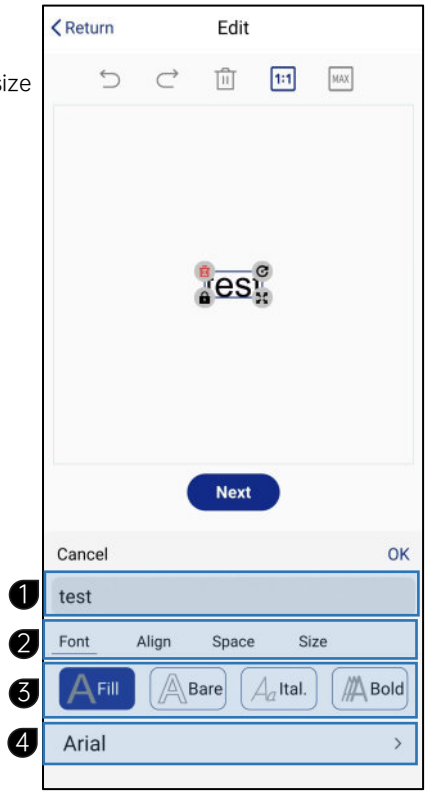

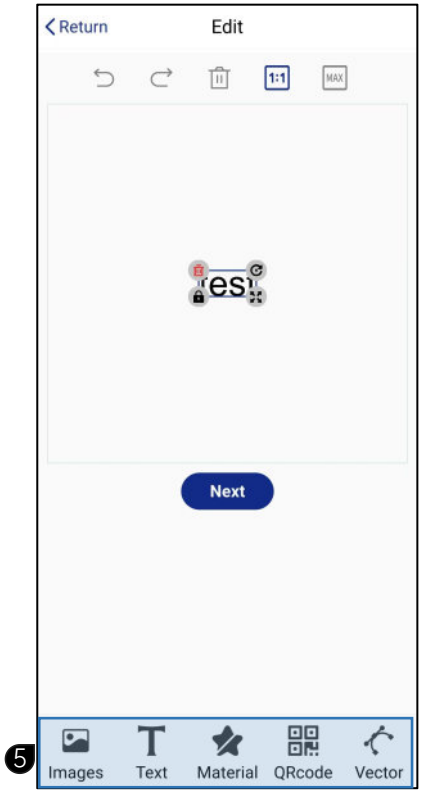

Text Editing

1. Resize the carving
2. If a rotating roller is connected, please check "Rotating axis engraving"
3. Preview laser intensity: Default is 5%, if it is too bright, reduce it appropriately, otherwise increase it
4. Border preview positioning
5. Next step enter the engraving interface

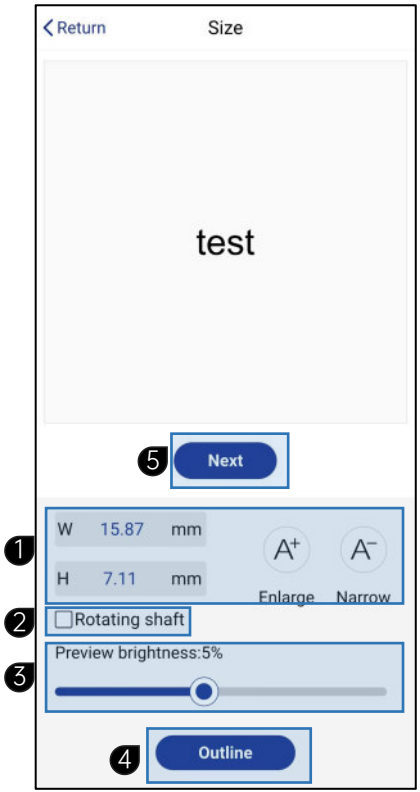

Serial number edit

1. Select Serial Number
2. Click Edit Serial Number

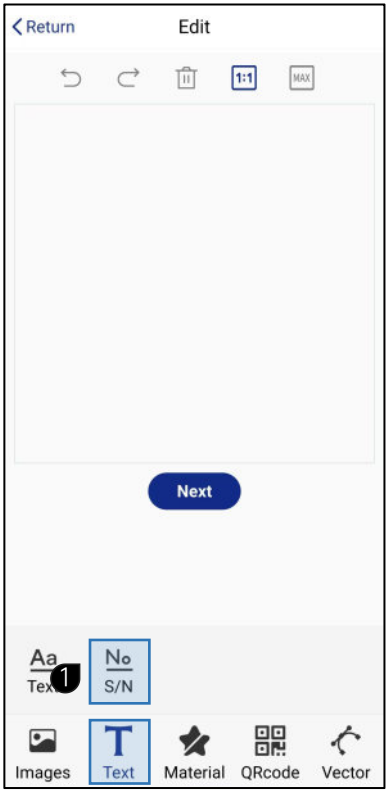

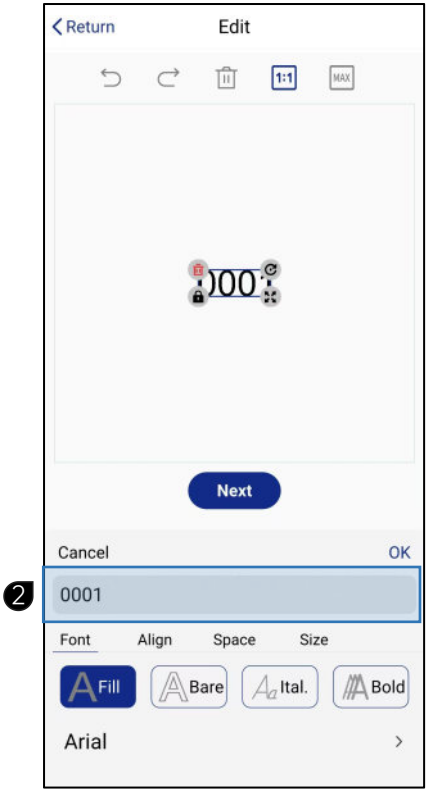

Serial number edit

3. Edit the serial number content as required and click OK to save.
4. Multiple content engraving can be added.

- Add a picture
- Add text
- Add stock images
- Add a QR code or barcode.
- Add DXF and PLT format vector files

3

4

Serial number edit

1. Resize the carving
2. If a rotating roller is connected, please check "Rotating axis engraving"
3. Preview laser intensity: Default is 5%, if it is too bright, reduce it appropriately, otherwise increase it
4. Border preview positioning
5. Next step enter the engraving interface

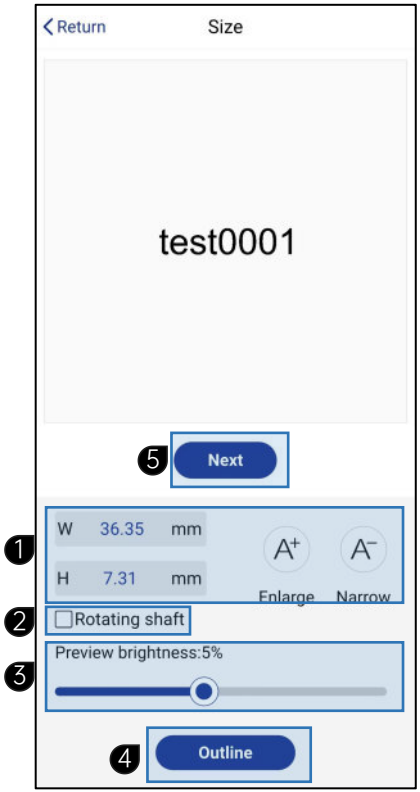

Contour Engraving and Cutting

Tips: 5w-10w blue laser head can cut 1-2mm thick wood, paper, bamboo; multiple cuts may be required. Transparent materials cannot be cut, and red laser head cannot cut.

1. You can use pictures or vector graphics files in DXF or PLT format.
2. Select Outline Mode
3. For cutting, you need to adjust the laser power to 100 and the engraving speed to below 10.

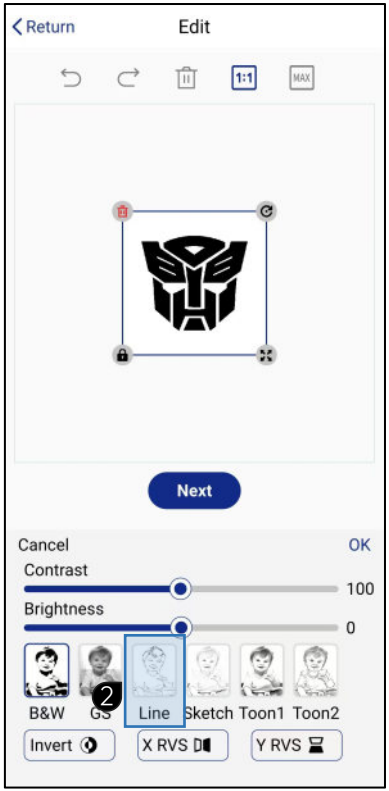

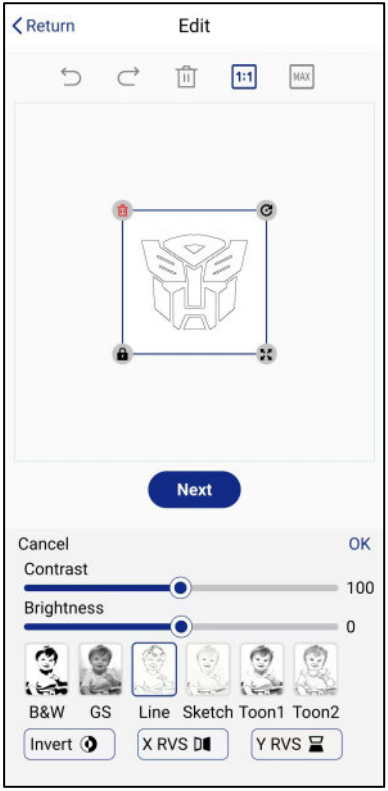

Start carving

1. Fix the engraving focal length, refer to page P14 " Laser module focusing method"
2. Preview the frame and position the object for engraving.
3. Material selection: You can add laser power and engraving speed for different materials yourself, which is convenient for later selection.
4. Laser power: control the power output of the laser head;

   Engraving speed: control the engraving speed;

   The faster the engraving speed, the lighter the engraved color will be. The slower the engraving speed, the darker the engraved color will be.
5. Number of engraving times: 1 by default, can be modified as needed.
6. Clarity: The higher the value, the clearer the engraving effect will be, but the engraving time will be slightly longer.
7. Start carving

Tip: Before you start engraving, please read the "Safety Precautions" on page P4 carefully.

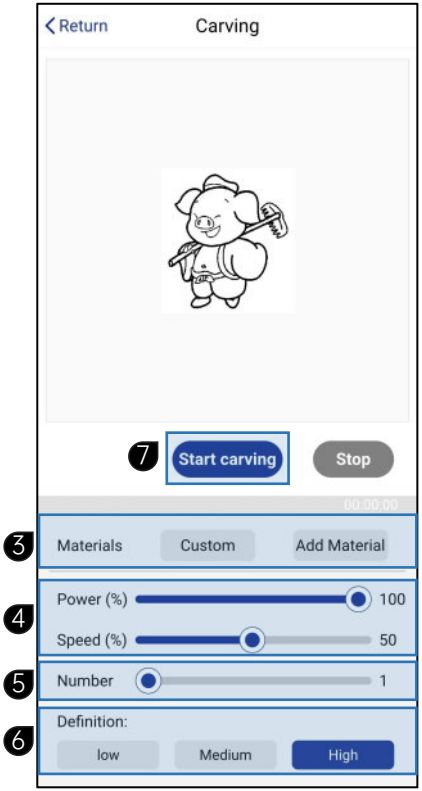

LightBurn Software connectivity

Note: This document only provides tutorials for connecting the machine to LightBurn, it does not provide tutorials for the software or its use;

LightBurn software can be purchased and downloaded at *lightburnsoftware.com*;

For tutorials on how to use the LightBurn software, please search the web yourself.

1, the machine is plugged into the power cord and data cable to turn on the machine.

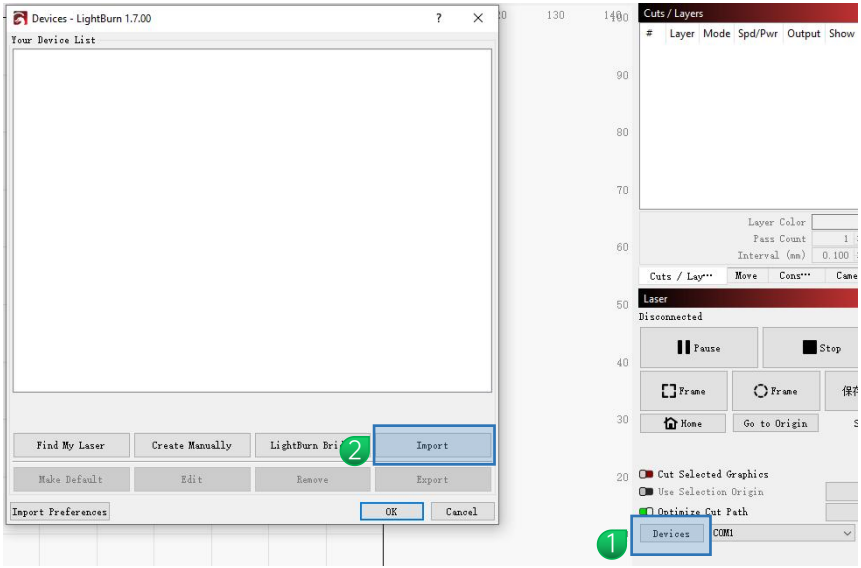

1 Click on "Devices"

2 Click on "Import"

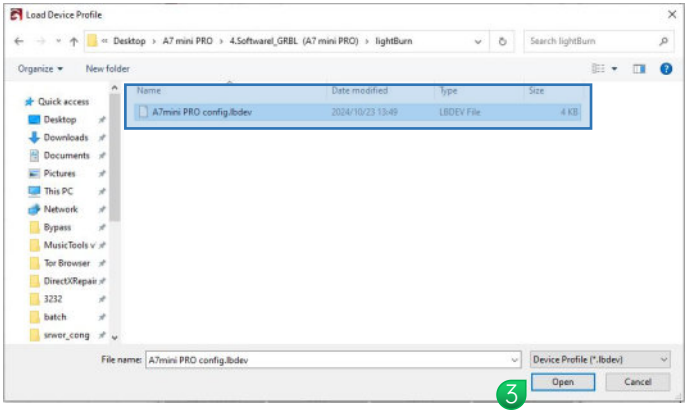

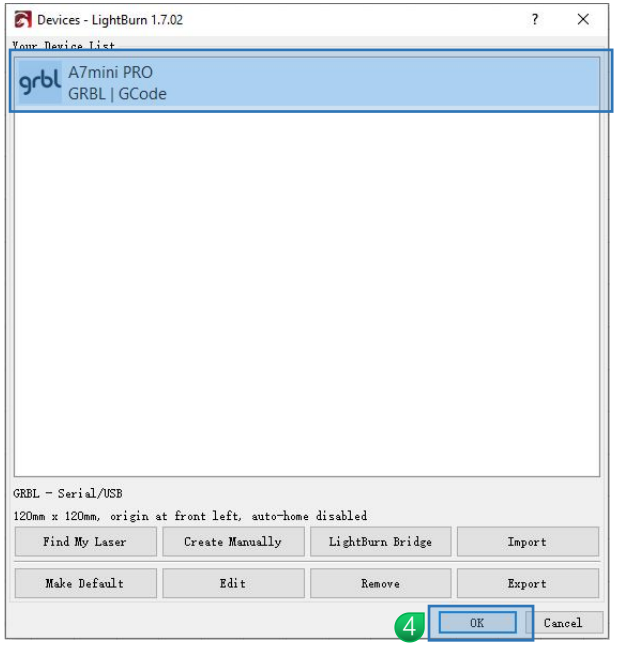

3 Import configuration file "A7 mini PRO config.lbdev"

file path "A7 mini PRO\4.Softwarel_GRBL (A7 mini PRO)\lightBurn".

4 Click on "OK"

5 Select the newly added device

6 Click on "Home"The device will reset

7 The display of "Laser Reay" indicates a successful connection.

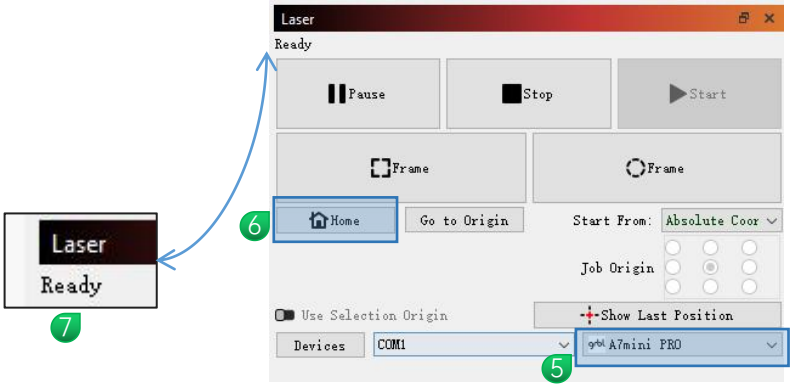

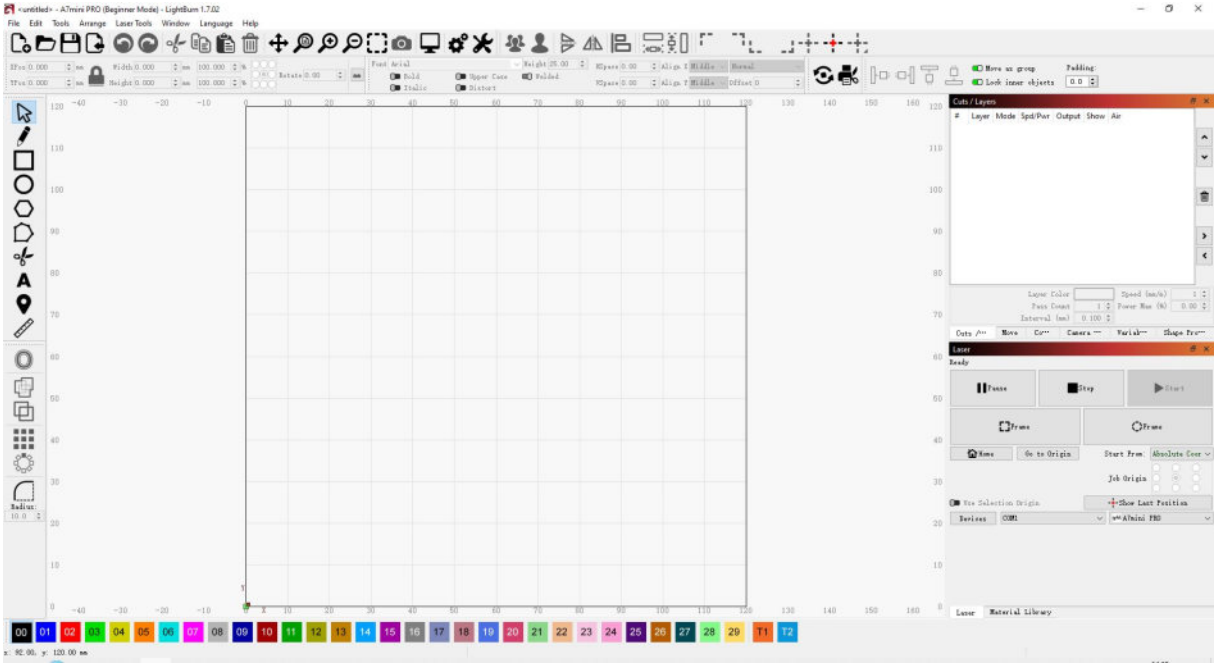

LightBurn Software Interface

FAQ

A7 mini Pro FAQ

▶The machine does not respond when powered on

1. Not powered on: Check the sockets, switches, body power sockets, etc. to make sure they are plugged in and powered on normally; check whether the power switch is turned on.

▶Cannot connect to computer

1. The USB cable is not connected: Check the computer end of the USB data cable and the machine interface to ensure that it is plugged in place. The USB interface on the front panel of some desktop computers is invalid and needs to be connected to the socket on the rear of the fuselage.
2. The driver is not installed normally: Complete the driver installation according to the operating instructions. After the installation is completed, the computer recognizes the device as a serial port, indicating that the hardware connection is OK.
3. Other special circumstances: Unplug the USB data cable and power supply, completely power off the device for 5 seconds, and then reconnect.
4. This device will conflict with the printer device port. It is recommended to remove the printer data cable before operating.
5. To prevent false alarms from anti-virus software that may lead to unsuccessful driver or software installation, please manually close the anti-virus software before installation.

▶The engraving effect is very light or has no traces

1. Inaccurate focus: Read the focus section of the user manual to get accurate focus.
2. Engraving speed: too fast, caused by the burning time being too short. Read the engraving parameter section of the user manual to readjust the parameters.
3. The picture is too light: The imported picture must be clear. The lines are too thin and the color is too light, which will directly affect the engraving effect.
4. Place the object to be engraved: If the object to be engraved is placed at an angle, the focal length of the laser is fixed, so the object to be engraved must be placed flat and parallel to the fuselage. Otherwise, the focus will be inaccurate, resulting in abnormal engraving effects.
5. Engraving deformation and ghosting: Check whether the screw connection position of the machine is loose. Reset the machine. If the machine is elevated, please observe whether the elevation is stable.

All content on this material has been carefully checked. If there are any printing errors or misunderstandings, please contact the company. Note: If there are any technical improvements to the product, they will be enhanced in the new version of the manual without prior notice. If the appearance and color of the product are changed, the actual object shall prevail.

A7 mini Pro 取扱説明書

ご使用前にこの取扱説明書をよくお読みになり、大切に保管してください。

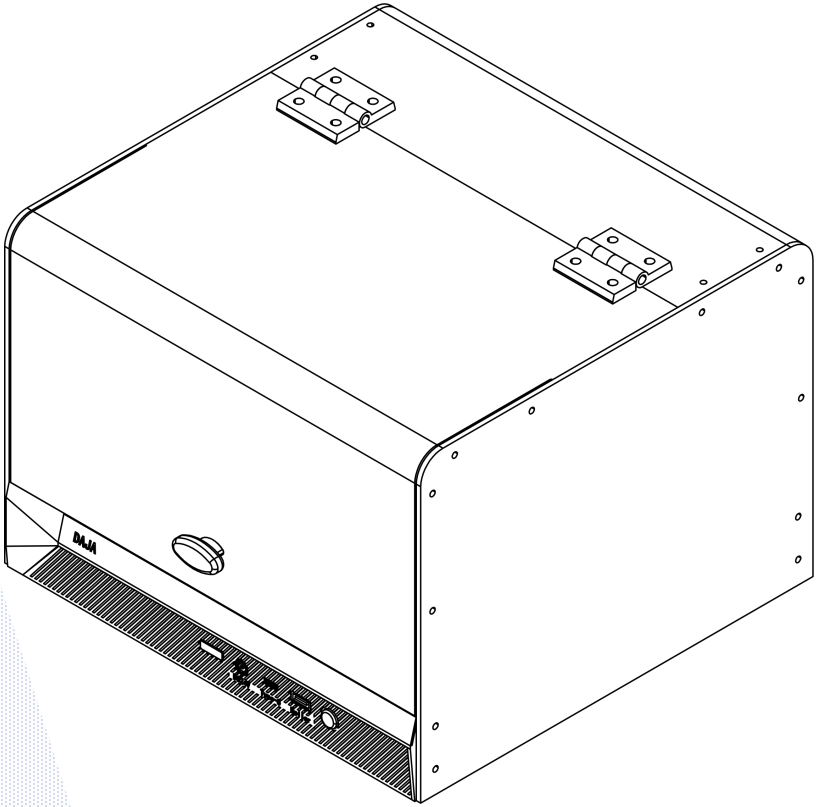

モデル：A7 mini Pro

ディレクトリ

安全上の注意事項 03
部品リスト 05
製品パラメータ 06
製品紹介 07
安全保護機能 10
レーザモジュールの集光方法 12
ソフトウェアの入手とインストール 14
パソコンソフトの機能紹介 15
画像編集 18
テキスト編集 19
ベクトル編集 20
バーコード編集 21
プレビューとマーク 22
モバイルアプリをダウンロードして接続 23
モバイルAPP機能紹介 25
画像編集 26
テキスト編集 30
シリアル番号の編集 33
輪郭彫刻と切断 36
彫り始める 37
よくある質問 38

安全上の注意事項

お客様の安全と財産への被害を防止し、お客様が本製品を安全かつ正しくお使いいただける

安全上の注意事項

★機器を操作する前に、ユーザーはマニュアルを注意深く読み、操作手順

★レーザー加工はリスクを伴う可能性があり、ユーザーは加工対象がレーザー加工に適しているかどうかを慎重に検討する必要があります。

★処理対象物および排出物は、現地の法律および規制を遵守しなければならない。

*この装置はクラス4レーザー(強いレーザー放射)を使用しており、以下を引き起こす可能性があります。

①周囲の可燃物を燃焼させる。

②レーザー加工中、加工対象によってはその他の輻射や有毒・有害ガスの発生が考えられます。

③レーザー光線を直接浴びると人体に害を及ぼす可能性があります。作業場には消火設備を設置しなければなりません。作業台や機器の周辺に可燃物や爆発物を置くことは禁止されています。また、良好な換気も不可欠です。

*機器が設置される環境は、乾燥しており、汚染、振動、強電流、強磁気、その他の干渉や影響のない状態であるべきです。 動作環境温度 10-35°C、動作環境湿度 5-95%(結露なし)

★機器の動作電圧:AC100-240V。

*彫刻機およびその他の関連機器は、操作を開始する前に安全にアースを接続する必要があります。

★電源を入れた機器は、常に人が付き添っていなければなりません。異常事態を防ぐため、誰かが施設から離れる際には、すべての電源を切断しなければなりません。異常事態が発生した場合は、速やかに電源を切断し、対処してください!

*人体や可燃物にレーザーが反射しないよう、装置内に無関係な全反射または拡散反射物体を置くことは厳禁です。

*この機器は、電磁妨害の影響を受けやすい電気機器の近くには置かないでください。電磁妨害の原因となる可能性があります。

*レーザー機器の内部には高電圧やその他の潜在的な危険性があり、専門家以外による分解は厳禁です。

*ここで指定されているもの以外のプログラムのパフォーマンスに対する制御または調整を慎重に使用すると、危険な放射線被ばくが生じる可能性があります。

安全上の注意事項

1.レーザー光は目に有害ですので、レーザーを直接見ないでください。

2. 操作中は機械に手をふれないようにし、怪我を回避する。

3.レーザーを点灯させた後は、皮膚の火傷や火災を避けるため、人や動物、可燃物に向けてレーザーを照射することは厳禁です。

4. 第三者による誤操作を避けるため、使用しない場合は機械の電源を切ってください。

保守管理

レーザモジュールは消耗品です。

言い出す:
1時間切断した後、5分後に電源を切る。;
2時間彫刻を行い、その後5分マシンを停止する。。

1、湿気や高温の環境では使用しないでください。。

2、濡れた手で操作部に触れない。。

3、機械のレンズを保護するために、定期的にアルコールを浸した綿棒で拭いてください。。

部品リスト

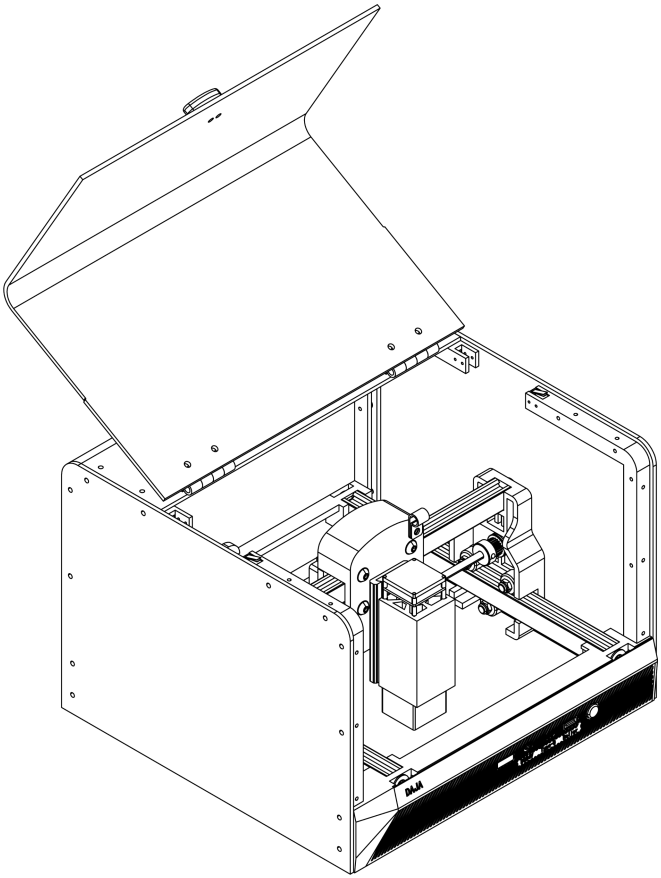

標準付属品

電源

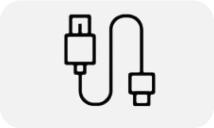

Type-C データケーブル

ゴーグル

USBメモリ

六角スパナ

取扱説明書

オプションアクセサリー

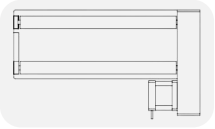

RT5ローラー

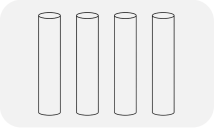

高さモジュール

製品パラメータ

製品モデル	A7 mini Pro
主材料	ABS+ 高強度金属
レーザー波長	青色光：435±10nm 赤外光：1064nm
彫刻速度	8000mm/min
レーザー寿命	>10000h （周囲温度27℃の場合）
フォーカスモード	固定焦点
彫刻エリア	120*120mm
彫刻精度	±0.1mm
彫刻可能な素材	ブルーレイは、ほとんどの非金属・非透明素材(紙、木、プラスチック、革、布、段ボール、革)に刻印することができます。 赤色灯は、すべての金属材料と一部の非金属材料に彫刻することができます。
マシンパワー	≤ 60W
入力電圧	DC 24V 2.5A
データ伝送	USB有線伝送、Bluetoothワイヤレス伝送
冷却方法	空冷
サポートシステム	DJLaser （windows、macOS、Android、IOS） LightBurn （windows、macOS）
対応フォーマット	画像フォーマット：JPEG/BMP/JPG/PNG ベクトルフォーマット：DXF/PLT
機械の正味重量	2.3KG
マシンサイズ	281*298*205mm（L*W*H）

製品紹介

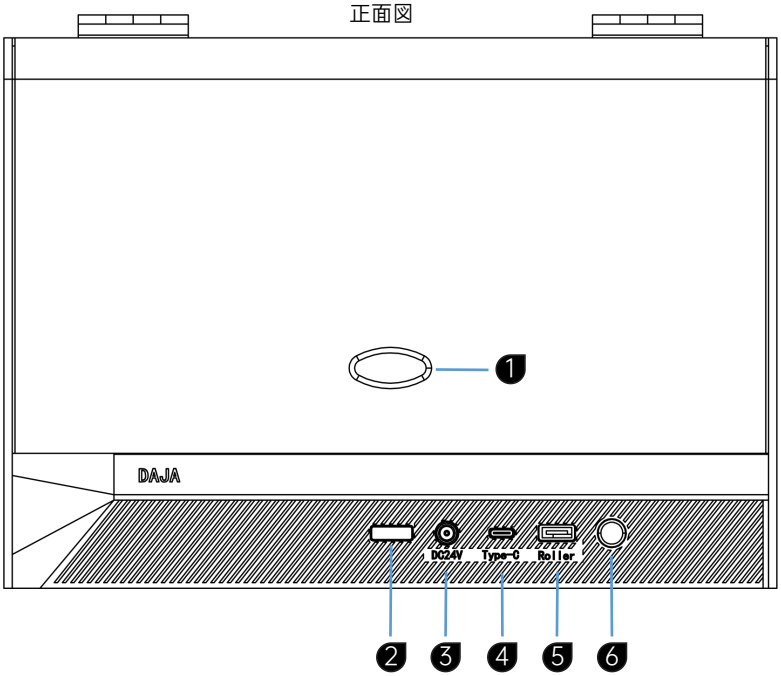

1 安全ドアハンドル

2 状態表示ランプ

1.青ランプが常時点灯：電源オン状態；

2.緑のランプが常に点灯：ソフトウェアが接続されている；

3.グリーンライト点滅：彫刻作業中；

4.赤ランプ点滅：アラーム状態；

ヒント：アラーム状態では、マシンはプレビューと彫刻操作を行うことができません。

3 24V2.5A 電源入力

4 type-cでコンピュータと接続する

5 つなぎ車

6 電源スイッチ

1.短押しでスイッチオン；

2.電源が入っているときに、1秒間長押しして電源を切る；

3.素早く2回押すとリセットされます。

製品紹介

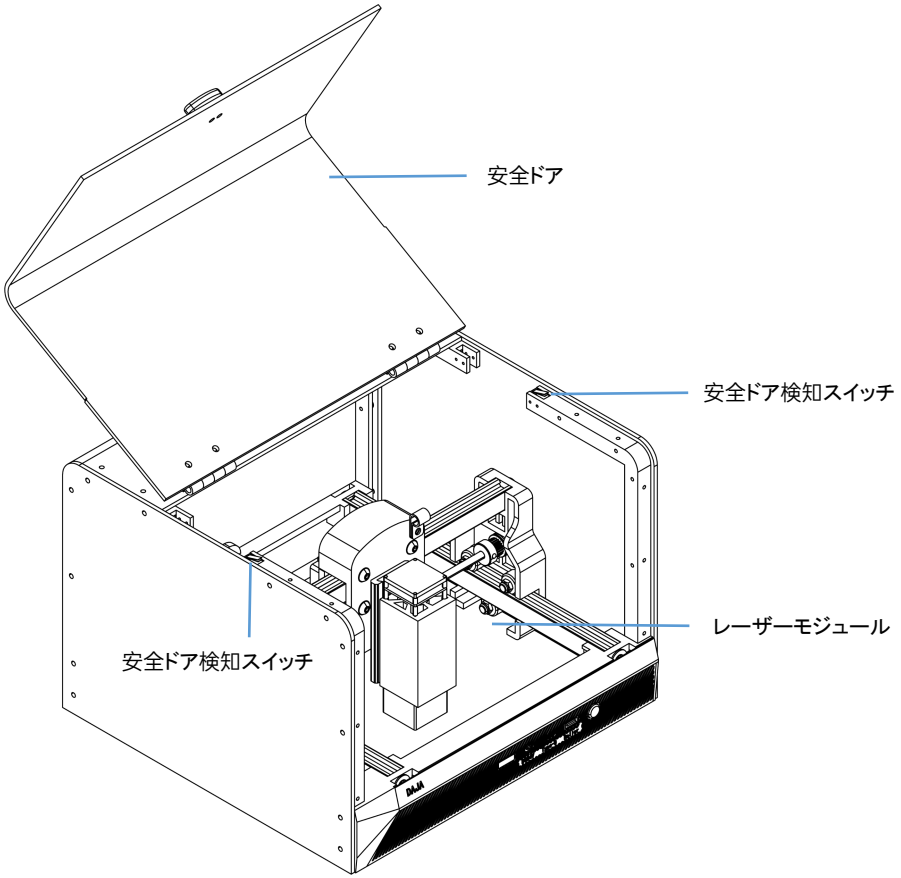

製品紹介

背面図

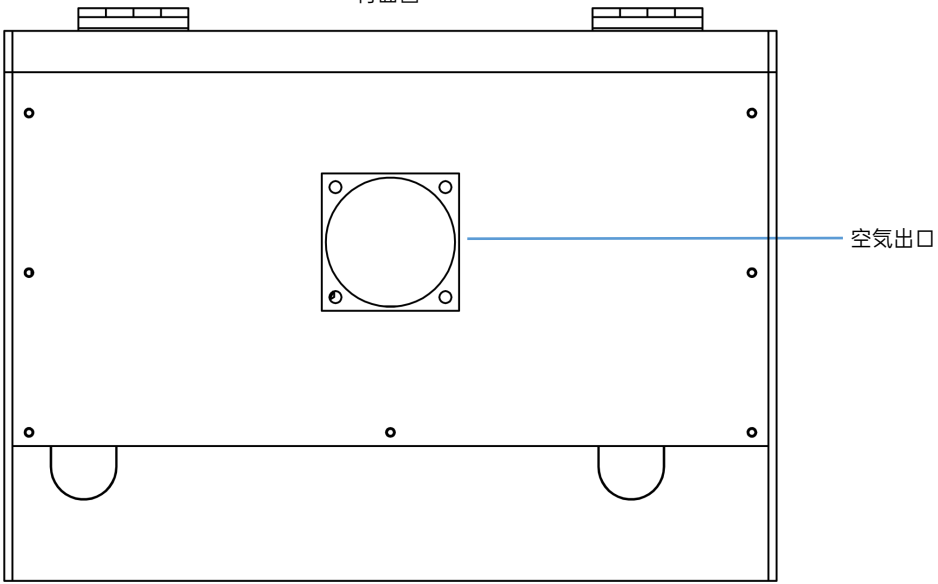

安全保護機能

【傾斜保護機能の説明】

ホストが水平面に対して一定の角度に傾き、その状態が 1 秒以上維持されると、マシンは直ちに動作を停止し、レーザー モジュールはレーザー出力を停止します。保護状態に入った後、通常の機能を再開するには、マシンを水平にする必要があります。（この機能は設定でオフにすることができます）
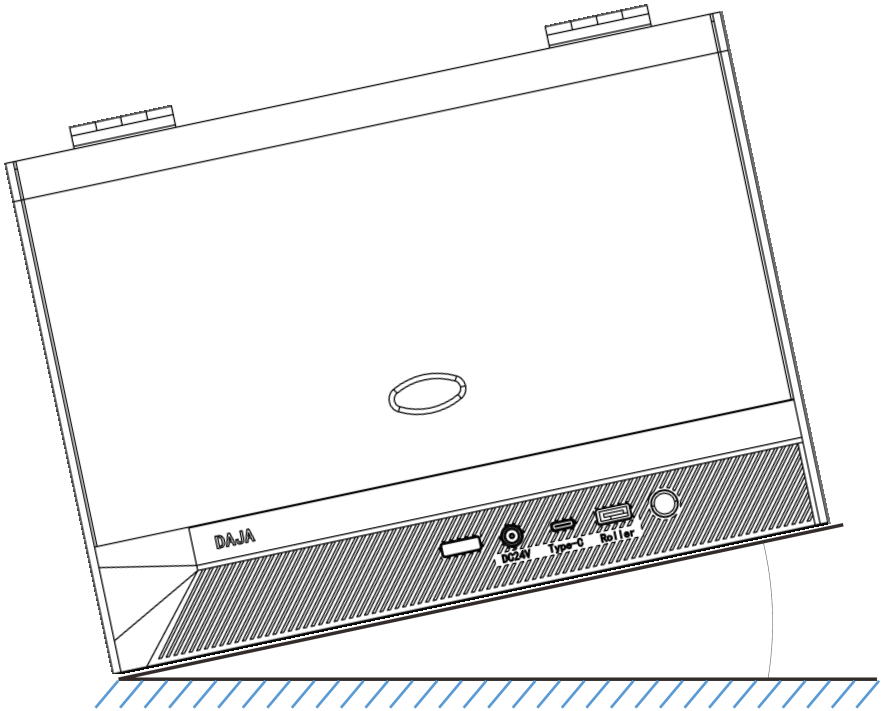
ヒント：機械が傾き、ステータスインジケータが赤く点滅する。