DAJA C1 Ultra

User Manual

Please read this user manual carefully before use. Use the laser engraving machine correctly and safely.

FCC SDOC

Warning

To assure continued compliance, any changes or modifications not expressly approved by the party.Responsible for compliance could void the user's authority to operate this equipment.

FCC ID:2BHH8-C1ULTRA

FCC Statement
This equipment complies with Part 15 of the FCC Rules. Operation is subject to the following two conditions:
(1) This device may not cause harmful interference, and
(2) This device must accept any interference received, including interference that may cause undesired operation.

NOTE: This equipment has been tested and found to comply with the limits for a Class B digital device, pursuant to part 15 of the FCC rules. These limits are designed to provide reasonable protection against harmful interference in a residential installation. This equipment generates, uses and can radiate radio frequency energy and, if not installed and used in accordance with the instructions, may cause harmful interference to radio communications.
However, there is no guarantee that interference will not occur in a particular installation. If this equipment does cause harmful interference to radio or television reception, which can be determined by turning the equipment off and on, the user is encouraged to try to correct the interference by one or more of the following measures:
-Reorient or relocate the receiving antenna.
-Increase the separation between the equipment and receiver.
-Connect the equipment into an outlet on a circuit different from that to which the receiver is connected.
-Consult the dealer or an experienced radio/TV technician for help.

FCC Radiation Exposure Statement:
The equipment complies with FCC Radiation exposure limits set forth for uncontrolled environment. This equipment should be installed and operated with minimum distance 20cm between the radiator and your body.

English

Safe instructions

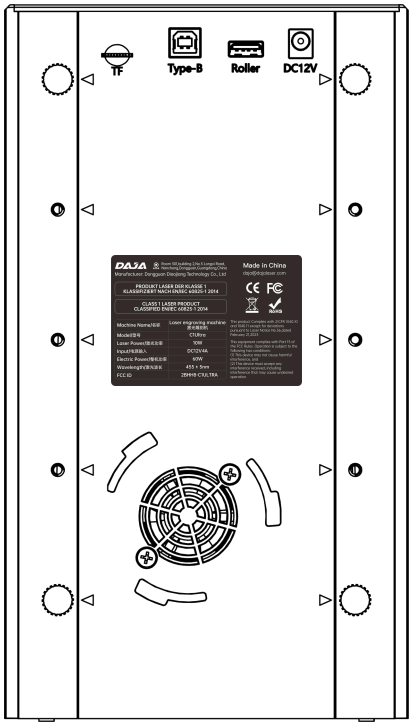

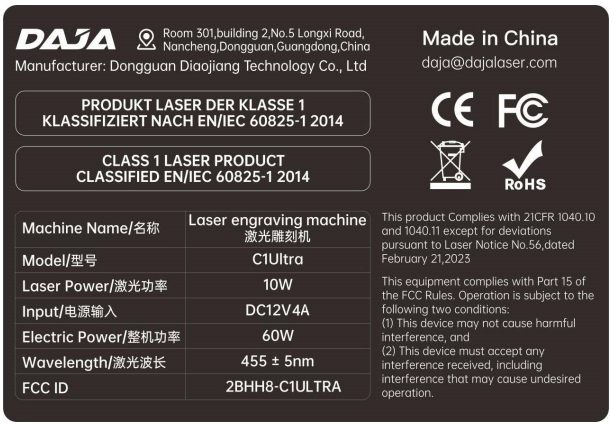

H: 55mm

W: 80mm

English

Thank you for choosing DAJA laser engraving machines.

Please read the user manual carefully before use and keep it in a safe place for further reference. For warranty and any technical support, please contact our service team at

e-mail address: official@mr-carve.com

English

Safe instructions

Thank you for purchasing the DAJA C1 Ultra Laser Engraver. To ensure optimal use and maintenance of this equipment, please carefully read this manual and follow the procedures outlined herein.

Important Statement!

Any damage caused by improper use or failure to follow the steps in the manual shall be borne by the individual. The final interpretation of the manual belongs to the Company, and the Company has the right to modify all information, data, technical details, etc. in this manual.

Safety Precautions

★Before operating the equipment, the user must read the instruction manual carefully and strictly follow the operating procedures.
★Laser processing can be risky and the user should carefully consider whether the object to be processed is suitable for laser work.
★Processing objects and emissions should comply with local laws and regulations.

★This laser radiation may cause the following conditions:

①Ignite surrounding flammable materials;
②During laser processing, other radiation and toxic and hazardous gases may be generated depending on the object to be processed;
③Direct exposure to laser radiation can cause human injury, the use of the place must be equipped with fire-fighting equipment, prohibited in the workbench and equipment around the stacking of flammable, explosive substances, while making sure to maintain good ventilation.

★The environment where the equipment is located should be dry, no pollution, no vibration, no strong electricity, strong magnetic interference and influence. Working environment temperature 10 ~ 35 ℃, working environment humidity 30-65% rh (no condensation)

★Equipment working voltage: AC100-240V.
★The engraving machine and any other equipment associated with it must be safely grounded before it can be turned on and operated.
★When the equipment is on, it needs to be guarded throughout the whole process, and all power must be cut off before the personnel leave to prevent abnormal conditions from occurring, and if it happens, please disconnect the power supply immediately to deal with it!

★It is strictly prohibited to place any irrelevant fully reflective or diffusely reflective objects in the device to prevent the laser from reflecting on the human body or flammable objects.

★The equipment should be kept away from electrical equipment that is sensitive to electromagnetic interference and may cause electromagnetic interference to it.
★There is high pressure or other potential danger inside the laser device, and disassembly by non-professionals is strictly prohibited.

⚠ warnings: The machine must be closed under the guard to work properly.

English

Safe instructions

Notice!

1.The brightness of the laser is harmful to the eyes. Please do not look directly at the laser.

2.Keep your hands away from the machine when it is working to avoid injury

3.After the laser is turned on, it is strictly forbidden to aim at people, animals and flammable objects to avoid skin burns and fire.

4. Turn off the power of the machine when it is not in use to avoid misoperation by a third party

Maintenance and upkeep

Laser modules are consumables;

Recommendation.
Turn off the machine for 10 minutes after 1 hour of cutting;

Turn off the machine for 10 minutes after 4 hours of engraving.

English

English

Safe instructions

Warning: Certain materials may become highly hazardous during laser cutting or engraving. For your safety, exercise extreme caution when processing these materials, understand the potential hazards they may pose, and take measures to protect yourself.

Materials	injury
PVC (polyvinyl chloride), vinyl, leather, synthetic leather	Cutting releases toxic pure chlorine gas accompanied by a strong irritating odor! It is recommended not to cut this material, as it may corrode machine tool metal components and damage optical components and motion control systems. When cutting this material, wear a gas mask or use an air purifier.
ABS	It releases cyanide gas and melts easily. It melts rather than evaporates, ignites readily, and leaves behind a viscous molten residue. When handling this material, it is recommended that you wear a gas mask and use an air purifier.
HDPE	Melting and highly flammable.
Expanded polystyrene foam	Melting and highly flammable.
Polypropylene foam	Melting and highly flammable.
Polycarbonate, Latex Paint	Change color and catch fire.
Coated carbon fiber	Release toxic gases.
Acrylic fiber (acrylic)	This material releases harmful gases. We recommend wearing a respirator or using an air purifier when processing it. Note that most 450 nm lasers can penetrate acrylic. The C1 Ultra semiconductor laser emits a beam wavelength ranging from 450 nm to 460 nm, meaning most laser beams will pass through acrylic rather than being absorbed. Semiconductor lasers can only cut a limited amount of non-transparent, translucent acrylic sheets. Compared to semiconductor lasers, CO_2 lasers are better suited for processing acrylic.

Note: When processing blue surface materials using a laser module emitting a 455 nm laser beam, most of the laser beam will be reflected rather than absorbed. You will need to increase the power to ensure proper processing.

Warning: Do not process reflective materials such as mirrors. Laser beam reflection is extremely dangerous and may cause injury to you and damage to the laser equipment.

English

Cutting

Lasers can be used to cut wood, paper, cork, and certain types of plastic; they can also engrave most materials, such as wood, paper, coated metals, stainless steel, plastic, marble, stone, tile, glass, and more.

Materials	Instruction	Warning
Most trees	Avoid using oily or resinous woods.	Exercise extreme caution when cutting oily or resin-rich wood. These materials are highly flammable. Maintain a cutting speed below 2% and power output at 10% when processing wood.
Plywood, composite wood	They are glued together and may not be as satisfying as solid wood.	
Medium-density fiberboard, engineered wood	They can be cut, but they may burn quite a bit.	
Paper, paperboard	They can be cut easily and beautifully.	
Cardboard, paper boxes	They can be cut easily, but they may catch fire.	Exercise caution around open flames and proceed with care during cutting.
cork	They can be cut quite well. However, cutting results may be affected by the thickness and quality of the cork. If there is too much glue, the cork may not cut well.	Avoid using thick cork.
Polycarbonate	Thin polycarbonate can be cut, but its color typically undergoes significant changes.	Keep the area well-ventilated and be mindful of fire hazards.
Depron foam	It cuts beautifully with smooth edges, making it popular for hobbyist projects, remote-controlled aircraft, architectural models, and toys.	Take special care when cutting.
Fabric, felt, hemp fiber, cotton, leather	It can cut thin fabrics, felt, hemp fibers, cotton, or leather, but the edges may scorch due to high temperatures.	

English

carving

All of the above materials that can be cut can also be engraved. Additionally, you can engrave:

Materials	Note	Warning
Glass	The texture of engraved glass resembles that of sandblasted glass.	The beam emitted by the C1 Ultra's semiconductor laser module cannot be used directly for engraving transparent glass. Before engraving, a laser engraving machine marking paper must be applied to the glass surface.
Ceramic tiles	The processing generates fumes and dust.	
Anodized aluminum	It causes the anode coating to evaporate.	
Painted, coated metal	It will cause the paint to evaporate.	
Stainless steel	It will burn its surface and change its color.	Compared to semiconductor lasers, fiber lasers are better suited for processing metal products.
Stone, marble, granite	White patterns were etched into the surface, producing smoke and dust.	

English

Content

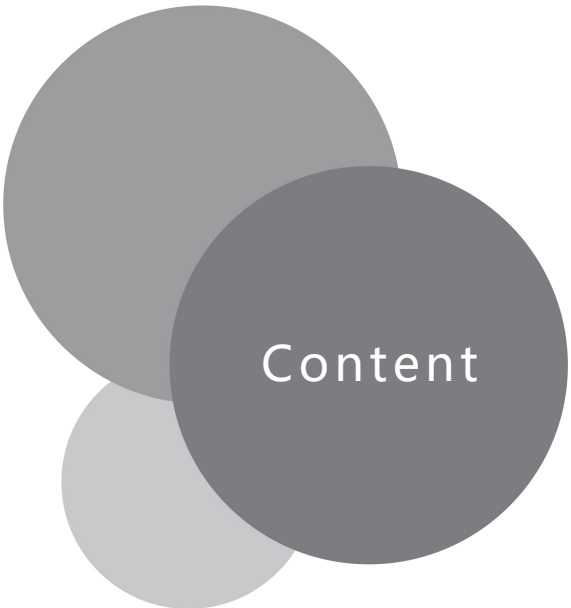

Product Parameters 10
Products and accessories 11
Product Mix 12
Focusing 15
Light Shield Function 16
Tilt Protection 17
Base Height 18
PC software installation 20
Mobile App Download and Installation 24
Mobile connection 25
Computer connection 27
FAQ 28

English

01 Product Parameters

Product Model	C1 Ultra
Primary Material	ABS + High-Strength Metal
Laser wavelength	Blue light: 455±5 nm
Laser power	5W / 10W
Engraving speed	30000mm/min
Laser lifetime	>10000h at 27°C ambient temperature
Focusing Method	Dual red light assist focusing
Engraving area	100x100mm
Engraving precision	0.01mm
Laser Class	Class 1
Total power consumption	≤ 60W
Engravable materials	Most non-metallic materials and non-transparent materials (paper, wood chips, plastic, leather, fabric, cardboard, leather)
Input voltage	5W DC 12V 4A / 10W DC 12V 4A
Data Transmission	USB-to-serial wired transmission, WiFi wireless transmission
Cooling method	Air-cooled
Support System	CutLabX Software Platform (Windows OS, macOS, Android, iOS) GRBL Software Platform (Windows OS, macOS)
Supported formats	CutLabX Software Platform -> Image Formats: JPEG/BMP/JPG/GIF/PLT/PNG/CUTLABX -> Vector Formats: DXF/PLT/HPGL GRBL Software Platform -> NC/BMP/JPG/PNG/DXF and other formats

English

02 Products and accessories

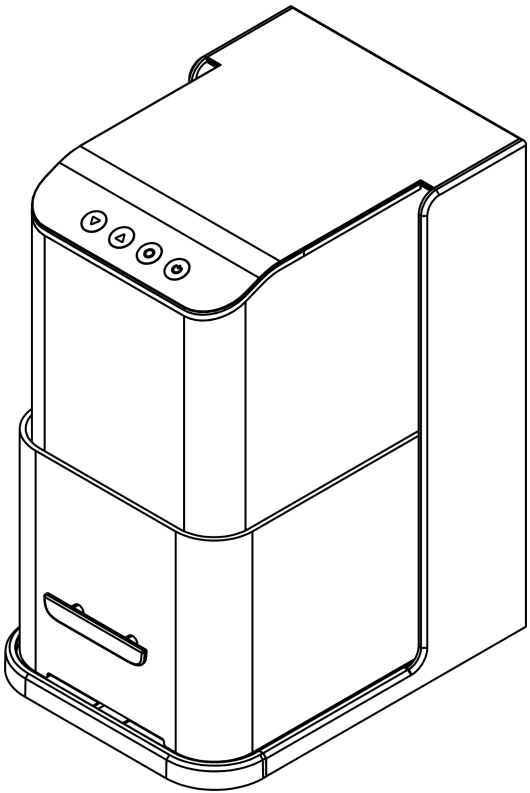

Standard accessories

TF card (inside the machine)

Card reader

Power Supply

Safety goggles

Data cable

User Manual

Bristle brush

wooden board

Paper

Optional Accessories

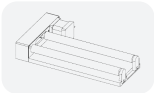

Rotary Module

Air Purifier

English

03 Product Mix

Rear view

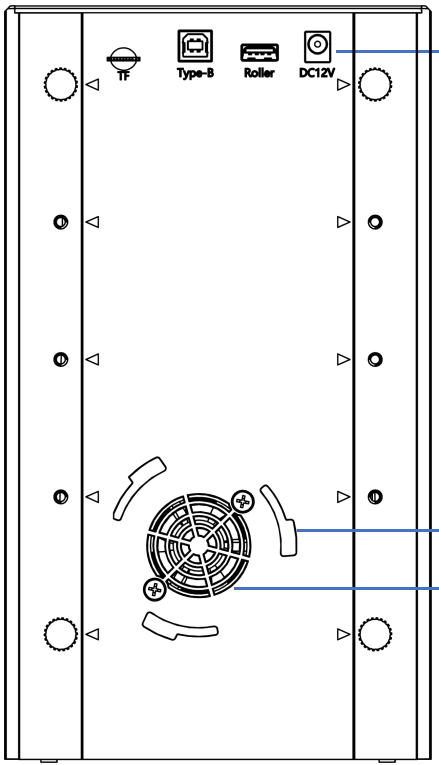

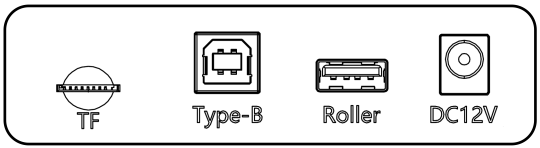

TF card

PC

Roller interface

Power Supply

Air Purifier Interface

Exhaust vent

English

03 Product Mix

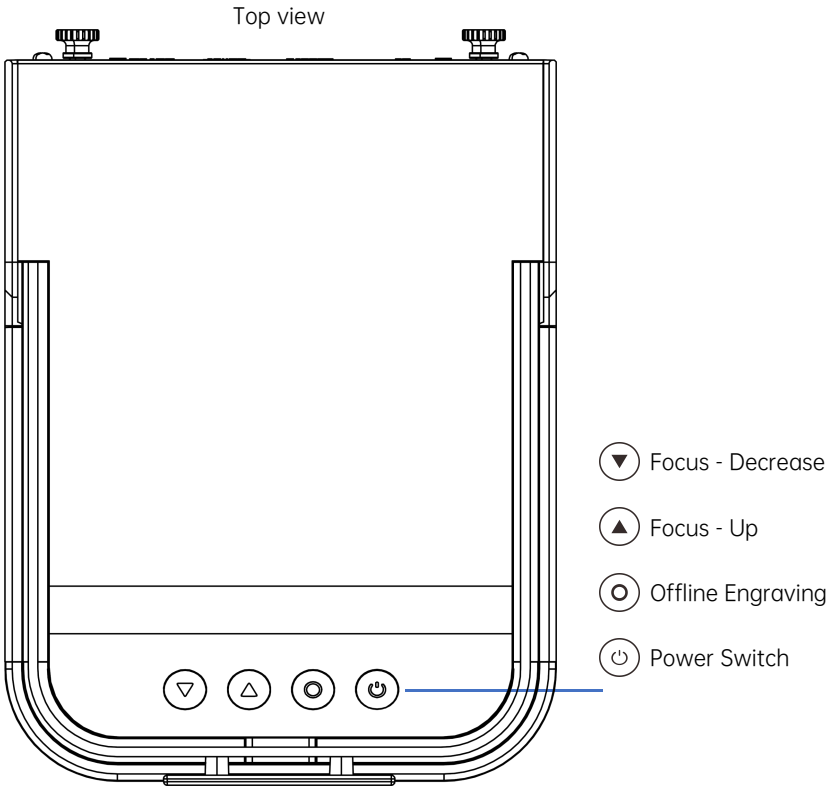

1. Generate an engraving or cutting file (gcode) using software such as CutLabX/LightBurn and save it to the root directory of the TF card, named: 001.nc

2. Before powering on, insert the TF card into the machine, then connect the machine using the included power adapter, and finally turn on the machine's power switch.

3. Press the "Offline Key Function" button:

a. Pressing this button will automatically reset the machine and preview it.

b. Press and hold for 3 seconds or more to enter engraving mode.

c. Press briefly again to pause.

d. Press briefly again to continue.

e. Press and hold for more than 3 seconds to cancel engraving.

English

03 Product Mix

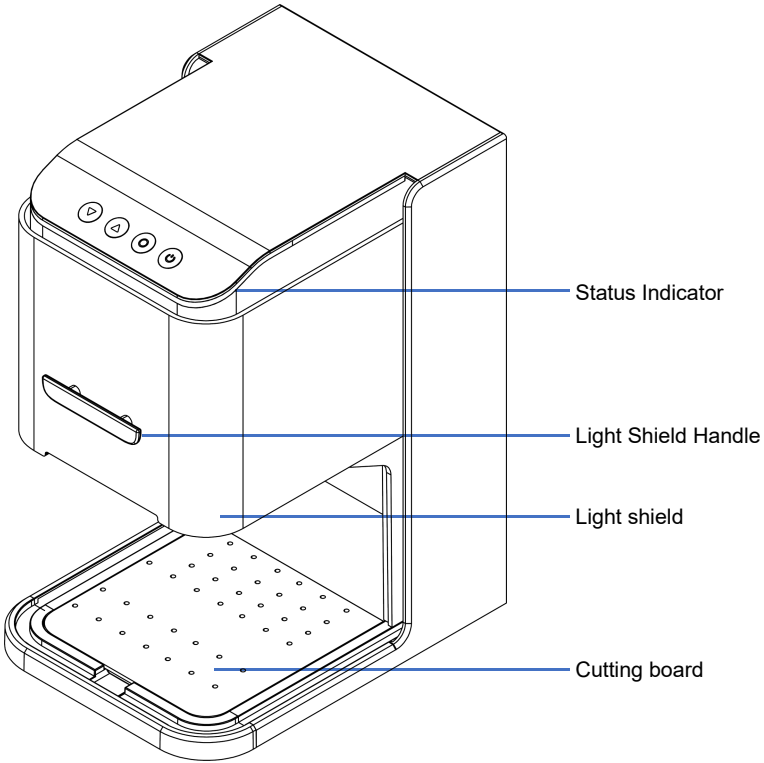

Status Indicator

1. Flashing (on for 0.2 seconds, off for 0.2 seconds): WiFi connection

2. Flashing (on for 0.5 seconds, off for 0.2 seconds): Warning state

3. Flashing (on for 0.5 seconds, off for 0.5 seconds): Door opening/tilt protection

4. Breathing Flash: Sculpting State

5. Always On: Standby mode

English

04 Focusing

▼ Focus - Decrease

▲ Focus - Up

Press and hold the focus up/down button until two red dots appear; Adjust until both dots align on the engraving object to complete focusing.

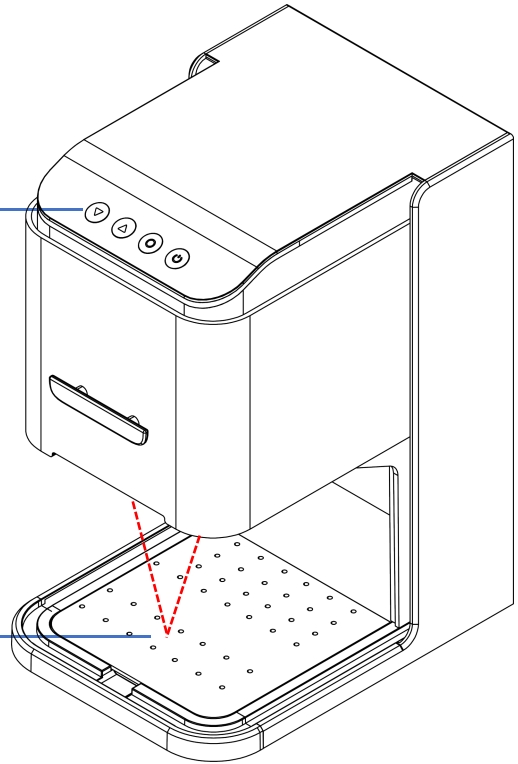

The two red dots coincide on the engraving.

English

05 Light Shield Function

When operating the machine, the light shield must be lowered; otherwise, the machine cannot be controlled. During engraving, raising the light shield will cause the laser module to immediately cease laser output. (This function can be disabled in the software.)

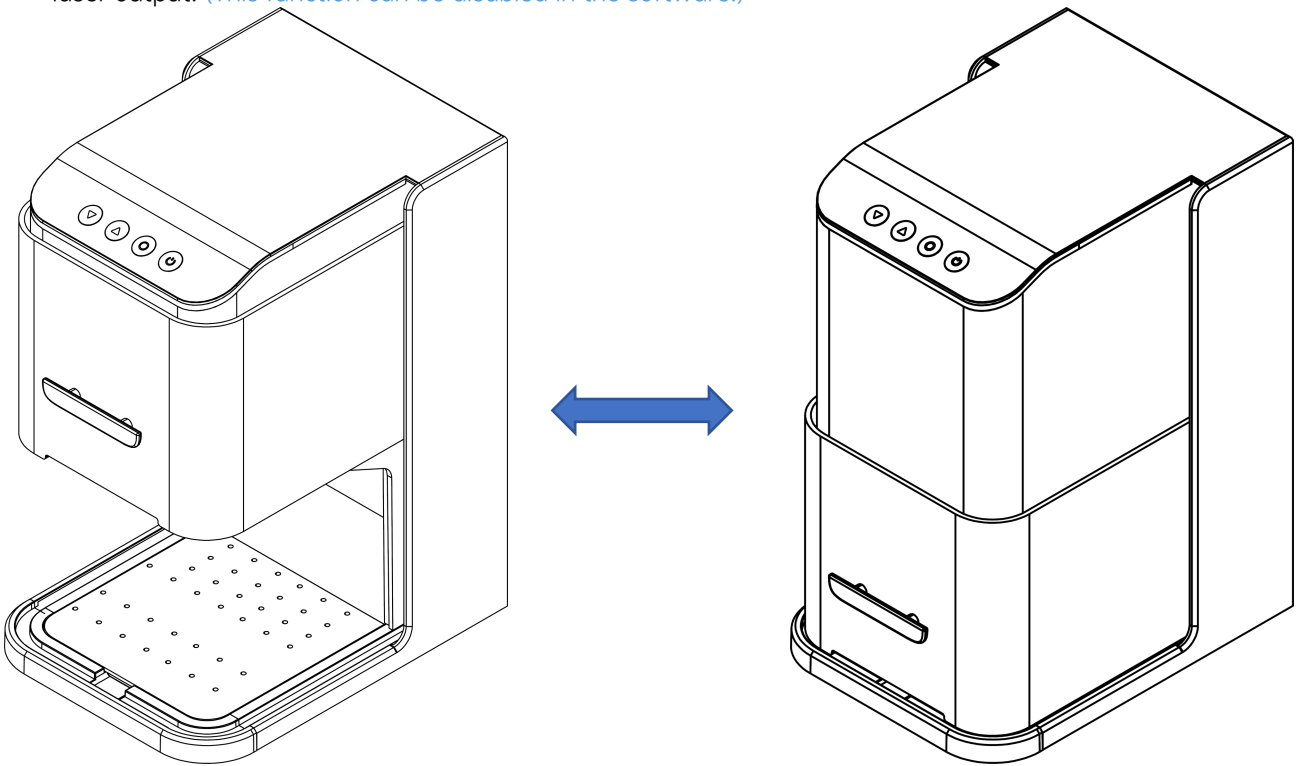

English

06 Tilt Protection

When the machine tilts at a certain angle relative to the horizontal plane and remains in that position for over 1 second, the machine will immediately stop operating. The laser module will cease laser output and enter a protective state. To restore normal functionality, the machine must be powered off and restarted.

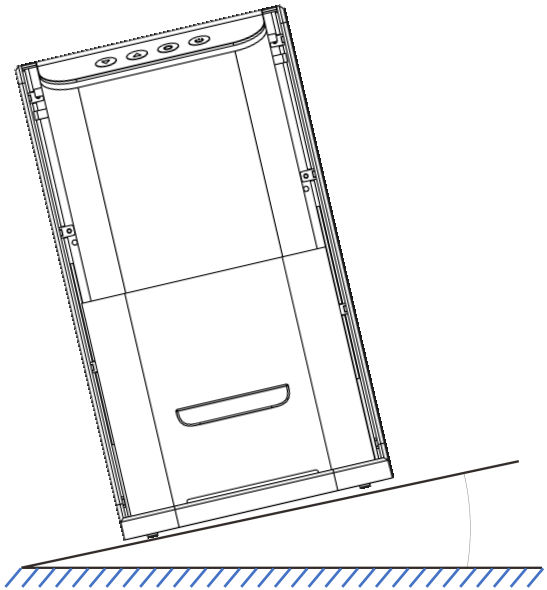

English

07 Base Height

Note: When engraving objects taller than 25mm or using roller engraving, adjust the height of the machine base.

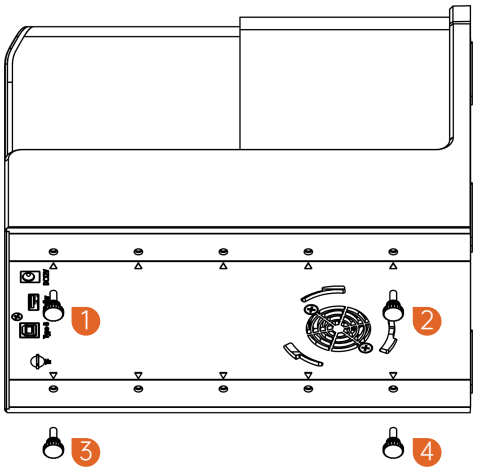

1. Unplug the power cord, lay the machine flat, and remove the four screws.

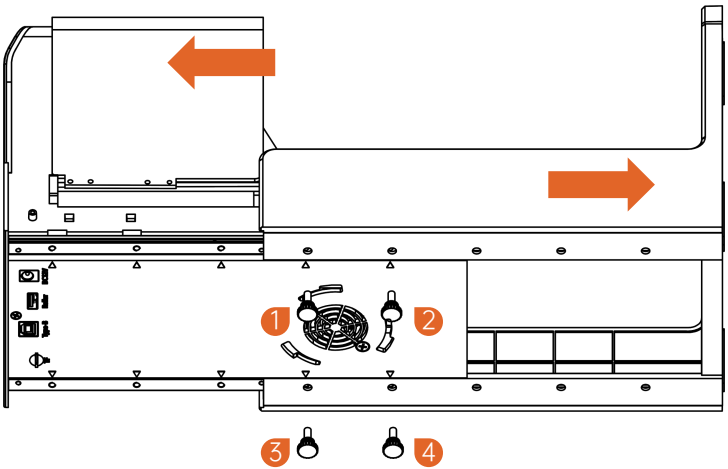

2. Pull out the base lift bracket, then secure it with four screws.

English

07 Base Height

3. Adjust the lifting distance of the base appropriately according to the height of the carved object.

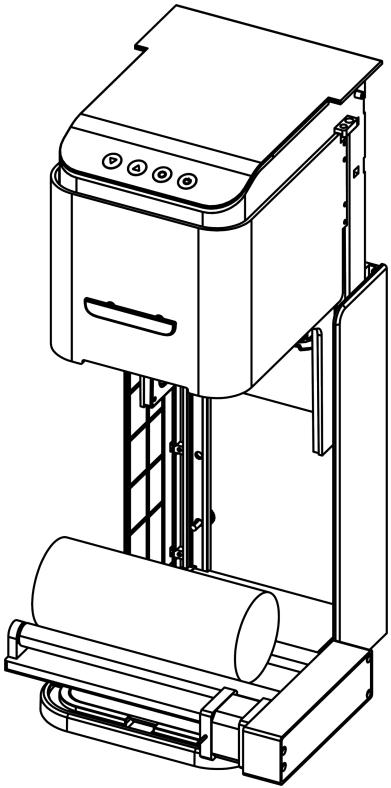

English

08 PC software installation

1. Driver installation path:

Double-click the U disk folder/windows/driver/driver.exe/Click to install/Driver installation is successful

【Method 1】:

Insert the supplied card reader into the TF card inside the machine and read the information about the software supplied with the machine.

① TF card

② 01_Windows

③ driver

④ driver.exe

【Method 2】:

Visit the official website for information

https://mr-carve.com

⑤ Click to install

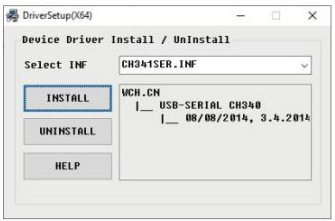

⑥ Confirm to complete the installation

*Driver software acquisition method: Download from the designated website www.mr-carve.com

English

English

08 PC software installation

2. Software installation path:

Double-click U disk data file/windows/software/ CutLabX/Wait for the progress bar to complete the installation

① TF card ② 01_Windows

③ software ④ CutLabX

⑤ Double-click CutLabX installation

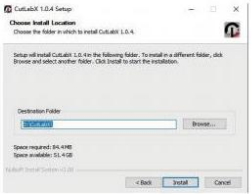

⑥ Select the installation location and click "OK"

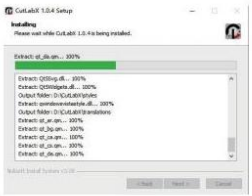

⑦ Wait for the progress bar to complete

⑧ Installation completed

3. Online operation:

Use a data cable to connect the machine to the computer

Double-click the software icon-enter the creation interface-select the appropriate port

Click "Connect" when it becomes "Connected" to indicate a successful connection.

① Double-click the software icon

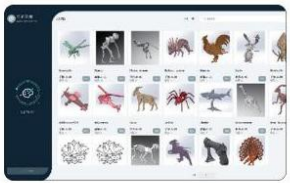

② Enter the homepage and click Start Creating

③ Select the appropriate port to connect

④ Connect successfully

Tip: If the antivirus software or computer manager pops up a risk prompt after clicking CutLabX, the CutLabX file is a Win system installation package.
If it is mistakenly identified as a suspicious file, please select Allow all operations of the program to successfully complete the software installation.

English

English

1. Driver installation path:

Driver installation path: Double-click U disk/02_MAC/driver/CH34x_Install_V1.4.pkg/Installation introduction/Installation type/Installation/Installation completed

④ Click Continue

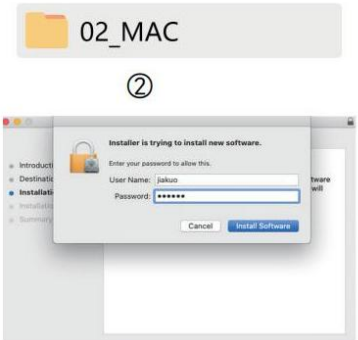

⑤ Enter the computer password

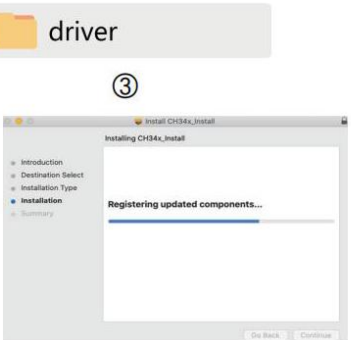

⑥ Click Continue installation

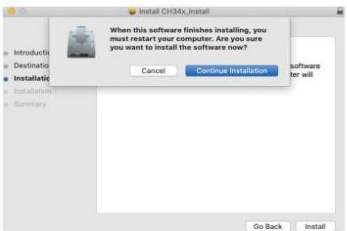

⑦ Continue installation

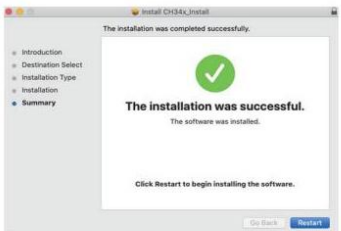

⑧ Complete installation

English

English

2. Software installation path:

Double-click the USB disk/02_MAC/software/CutLabX/software icon right/Complete the installation

⑤ Double-click the software icon

⑥ Drag the icon to the right of the Applications folder

⑦ Complete the installation

3. Online operation:

Use a data cable to connect the machine to the computer

Double-click the software icon-click the connection device icon-select the appropriate port

Click "Connect" when it becomes "Connected" to indicate a successful connection.

① Double-click the software icon

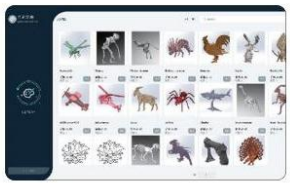

② Enter the homepage and click Start Creating

③ Select the appropriate port to connect

④ Connect successfully

Tip: When the machine is connected to MAC, you must select a name that begins with: W.ch.....

English

English

09 Mobile App Download and Installation

Android Software Download and Installation

【Method 1】:

APP Download URLhttps://mr-carve.com

【Method 2】:

Scan the QR code to download

Google play

Apple Software Download and Installation

【Method 1】:

Search for "CutLabX" in the AppStore to download.

【Method 2】:

Scan the QR code to download

Apple store

Note: Android system, open the browser to scan the QR code to download and install , after successful installation, you need to obtain the appropriate permissions, if necessary, manually open the software permissions

English

10 Mobile connection

1. Steps for connecting the cell phone to the machine: Default WiFi

* Note: After the cell phone is successfully connected to the machine, there will be no network on the cell phone.

01 Power on the machine and turn it on

↓

02 Turn on your phone's WLAN and find the WIFI signal name C1 Ultra, password: 12345678.

↓

03 After the WIFI connection is successful, open the CutLabX APP,Click the link mark in the upper right corner,
Enter 192.168.0.1 as the IP address,
and click "Connect" to complete the connection.

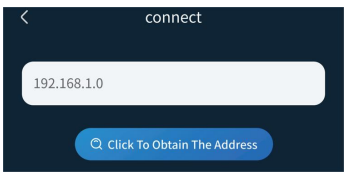

(Tip: When using WiFi mode, the machine and the mobile phone must be in the same WiFi network)

English

2. Steps to connect the phone to the machine: Home network

01

Turn on the device and turn it on

02

Connect the machine with a USB cable

03

Open the CutLabX software and enter the creation interface. The machine will automatically connect after recognition

04

The machine will automatically connect after recognition
(If it does not connect automatically, try a different COM)

05

Click the "WiFi Settings" button. Click to enter the WIFI name, home network password, and restart the machine

06

Turn on the WIFI on your phone, find the home network WiFi name, and enter your password

07

After the WIFI connection is successful, open the CutLabX APP and click the link mark in the upper right corner

08

"Click to get the address"

09

Click your IP address to get it, and click "Connect"

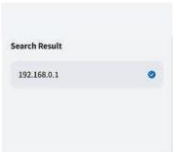

10

The connected IP is displayed, indicating that the connection is successful

(Tip: To use the WiFi mode, the machine and the phone must be in the same WiFi network)

English

English

3. Steps to connect the computer to the machine via USB

*Note: Install the driver according to your computer system (see driver installation instructions).

01 Turn on the machine and turn it on

02 Connect the C1 Ultra machine with a USB cable

03 Open CutLabX software and enter the creation page

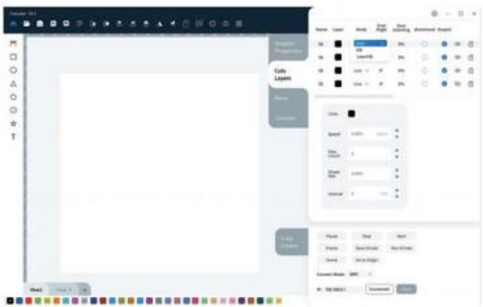

04 Automatically identify the machine and connect

(If it does not connect automatically, you may need to try another COM)

(Tip: When the machine is connected to a MAC, you must select the name that begins with: W.ch.....)

English

FAQ-Machine-related issues

Questions	Solutions
What type of laser source does the machine use?	It is a semiconductor laser
What happens if the machine loses power during operation?	When power is cut off during an engraving task, the laser head will remain in place. When the power is turned on again, the machine will initialize and will not continue to perform the original task.
Why can't the pattern be engraved at all (or the engraving is very shallow)?	The imported picture should be clear and the color should not be too light; before engraving, please make sure the focus is correct and the power, speed and time settings are appropriate.
What if the pattern is not engraved completely (or the depth is inconsistent)?	Please make sure that the engraving object is flat, the machine is level, and it has been adjusted normally according to the operating instructions.

English

FAQ-Machine-related issues

Questions	Solutions
How to focus the C1 Ultra laser engraving machine?	Place the material on the stage, lower the left knob to focus, and lock it after focusing. For example, engrave and cut a 2mm thick basswood board.
Will the working platform be damagedduring laser engraving?	During the engraving or cutting process, the laser may penetrate the object and leave marks on the work surface. Be sure to place an object that the laser cannot penetrate under the engraving object, such as: stainless steel plate, aluminum alloy plate, etc.
Why can't I start engraving when pressing the button on the host during offline engraving?	Ensure there is an engraving file in the root directory of the TF card and that the TF card is inserted. Note: a. The machine defaults to reading the engraving file with the most recent modification date in the root directory of the TF card. It is recommended to delete other unrelated files in the root directory. b. This file can be generated by LaserGRBL, LightBurn, or CutLabX software, and the compatible format is NC. If GC is generated by default, please manually change the file name to 001.NC.
Why does the machine not respond after turning on?	a. Check whether the power plug on the machine end is fully plugged in. b. Check the electrical status of the power socket. c. Check whether the power switch and light shield on the machine are closed.

English

FAQ-Machine-related issues

Questions	Solutions
Why can't the machine connect to the computer after it is turned on?	a. Reinstall the driver. If the driver is displayed as installed, it means the driver is working correctly. If the computer displays "Pre-installed driver complete," check if it's the original wiring or if it's not connected to the machine. Please use a different port on your computer. b. Is the port selection correct? Some computers have two ports for connection. Ignore COM1 and select another COM port. (MAC port numbers must begin with Wchusbserial to work correctly.) c. Close other software using the COM port. When using LaserGrub to connect, you cannot connect when CutLabX is open. You need to close LaserGrub to use it normally. *Note: In Lightburn, the machine can store information for multiple machines. Please select the appropriate configuration information according to the model.
Why can't the mobile phone be used after the machine is turned on?	a. Please use the mobile phone according to the manual. b. If the connection is abnormal due to incompatibility of the newly released mobile phone or system upgrade, please provide a screenshot of the mobile phone configuration and contact our customer service to get technical support as soon as possible.

English

FAQ- Engraving/cutting related questions

Questions	Solutions
What non-transparent materials can the C1 Ultra laser engraver engrave or cut?	Engraving: cardboard, wood, bamboo, rubber, leather, cloth, acrylic, plastic, etc.; Cutting: cardboard, wood, bamboo, cloth, leather, cloth, acrylic (transparent acrylic cannot be cut), plastic, etc.
Can it be engraved on curved materials?	Yes, but the curvature of the material and the area of the engraved image should not be too large, otherwise there will be slight deformation.
Can it be engraved on reflective/transparent materials such as ceramics/glass?	Yes, but before engraving, anti-reflective materials (such as laser colored paper, black marker) need to be applied to the surface of the material to ensure the engraving effect and prevent reflected light from damaging the laser module.
Why do materials of the same material but different colors have very different processing effects using the same G-code file?	Materials of different colors have different optical properties and absorb and reflect laser energy differently. When engraving materials of the same material but different colors, it is recommended to set different powers and speeds in the software.

English

FAQ- Engraving/cutting related questions

Questions	Solutions
There is a lot of smoke on the cut material, how to deal with it?	Please reduce the laser power and increase the speed appropriately.
Why can't the material be cut?	1. Make sure the machine and the engraving material are parallel to the work surface; 2. Make sure the laser module protective lens is clean; 3. Make sure the focus mode is correct; 4. Confirm the material thickness again and set it according to the recom-mended parameters in the random data; 5. Gradually increase the number of cuts, or appropriately reduce the cutting speed.

English

FAQ- Software related questions

Questions	Solutions
What software does the C1 Ultra laser engraver support?	LaserGRBL (free) - Real-time LightBurn (paid) - Real-time/offline 30-day trialCutLabX (free) - Real-time/offline/mobileDuring real-time engraving, be careful not to let the computer freeze or enter standby mode (do not lock the screen) to avoid affecting the engraving.
Where can I download these software?	LaserGRBL (https://lasergrbl.com/download/)LightBurn (https://lightburnsoftware.com/pages/trial-version-try-before-you-buy)CutLabX (www.cutlabx.com)
What image formats does the software support?	LaserGRBL (bmp/png/jpg/gif/svg) LightBurn (bmp/png/jpg/jpeg/gif/tif/tiff/tga/ai/pdf/sc/dxf/hpgl/plt/rd/svg)CutLabX (AI, PDF, SVG, DXF, PLT, PNG, JPG, GIF, BMP)
Where can I get tutorials for the software?	LaserGRBL (https://lasergrbl.com/usage/)LightBurn (https://lightburnsoftware.github.io/NewDocs/)CutLabX (www.cutlabx.com)

English

English

All contents on this material have been carefully checked, if there is any printing error or omission or any misunderstanding on the contents, you can consult with our company. Note: Any technical improvement of the products will be enhanced in the new version of the manual without prior notice. The appearance of the product, the color of any change, in kind shall prevail.

English