MR.CARVE

V1
User Manual

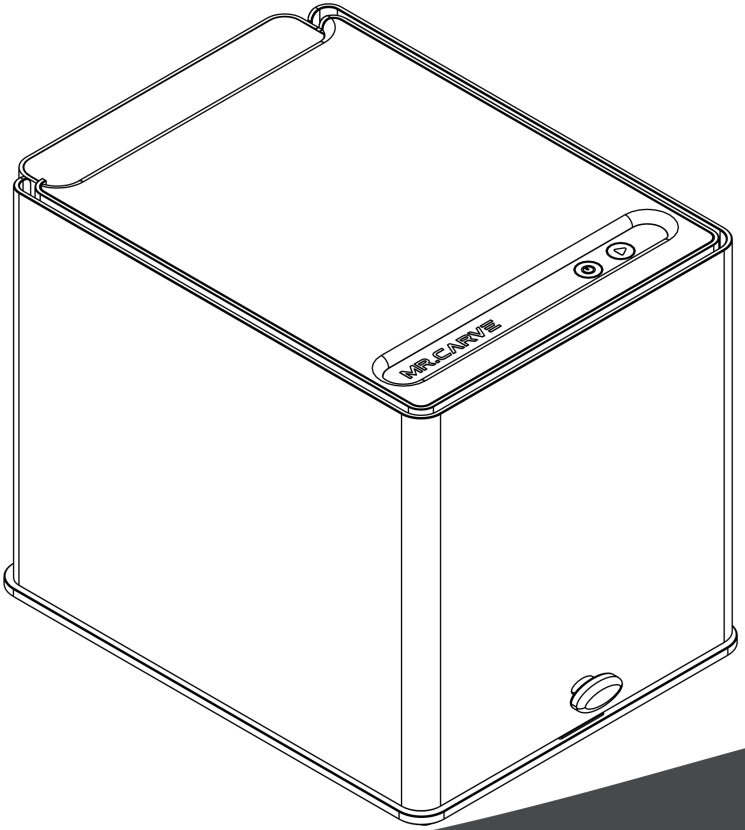

Please read this instruction manual carefully before use
Please use the laser engraving machine correctly and safely

FCC SDOC

Warning

To assure continued compliance, any changes or modifications not expressly approved by the party.Responsible for compliance could void the user's authority to operate this equipment.

FCC ID:2BHH8-V1

FCC Statement
This equipment complies with Part 15 of the FCC Rules. Operation is subject to the following two conditions:
(1) This device may not cause harmful interference, and
(2) This device must accept any interference received, including interference that may cause undesired operation.

NOTE: This equipment has been tested and found to comply with the limits for a Class B digital device, pursuant to part 15 of the FCC rules. These limits are designed to provide reasonable protection against harmful interference in a residential installation. This equipment generates, uses and can radiate radio frequency energy and, if not installed and used in accordance with the instructions, may cause harmful interference to radio communications.
However, there is no guarantee that interference will not occur in a particular installation. If this equipment does cause harmful interference to radio or television reception, which can be determined by turning the equipment off and on, the user is encouraged to try to correct the interference by one or more of the following measures:
-Reorient or relocate the receiving antenna.
-Increase the separation between the equipment and receiver.
-Connect the equipment into an outlet on a circuit different from that to which the receiver is connected.
-Consult the dealer or an experienced radio/TV technician for help.

FCC Radiation Exposure Statement:
The equipment complies with FCC Radiation exposure limits set forth for uncontrolled environment. This equipment should be installed and operated with minimum distance 20cm between the radiator and your body.

English

Thank you for choosing MR.CARVE laser engraving machine

Please read the user manual carefully before use and keep it in a safe place for further reference. For warranty and any technical support, please contact our service team at

e-mail address: official@mr-carve.com

English

Safe instructions

Thank you for purchasing the MR.CARVE-V1 laser engraver. For better use and maintenance of this equipment, please read this manual carefully and follow the steps in it.

Important Statement!

Any damage caused by improper use or failure to follow the steps in the manual shall be borne by the individual. The final interpretation of the manual belongs to the Company, and the Company has the right to modify all information, data, technical details, etc. in this manual.

Safety Precautions

★Before operating the equipment, the user must read the instruction manual carefully and strictly follow the operating procedures.

★Laser processing can be risky and the user should carefully consider whether the object to be processed is suitable for laser work.

★Processing objects and emissions should comply with local laws and regulations.

★This laser radiation may cause the following conditions:

①Ignite surrounding flammable materials;

②During laser processing, other radiation and toxic and hazardous gases may be generated depending on the object to be processed;

③Direct exposure to laser radiation can cause human injury, the use of the place must be equipped with fire-fighting equipment, prohibited in the workbench and equipment around the stacking of flammable, explosive substances, while making sure to maintain good ventilation.

★The environment where the equipment is located should be dry, no pollution, no vibration, no strong electricity, strong magnetic interference and influence. Working environment temperature 10 ~ 35 ℃, working environment humidity 30-65% rh (no condensation)

★Equipment working voltage: AC100-240V.

★The engraving machine and any other equipment associated with it must be safely grounded before it can be turned on and operated.

★When the equipment is on, it needs to be guarded throughout the whole process, and all power must be cut off before the personnel leave to prevent abnormal conditions from occurring, and if it happens, please disconnect the power supply immediately to deal with it!

★It is strictly prohibited to place any irrelevant fully reflective or diffusely reflective objects in the device to prevent the laser from reflecting on the human body or flammable objects.

★The equipment should be kept away from electrical equipment that is sensitive to electromagnetic interference and may cause electromagnetic interference to it.

★There is high pressure or other potential danger inside the laser device, and disassembly by non-professionals is strictly prohibited.

⚠ warnings: The machine must be closed under the guard to work properly.

English

Safe instructions

Notice!

1.The brightness of the laser is harmful to the eyes. Please do not look directly at the laser.

2.Keep your hands away from the machine when it is working to avoid injury

3.After the laser is turned on, it is strictly forbidden to aim at people, animals and flammable objects to avoid skin burns and fire.

4. Turn off the power of the machine when it is not in use to avoid misoperation by a third party

Maintenance and upkeep

Laser modules are consumables;

Recommendation.
Turn off the machine for 10 minutes after 1 hour of cutting;

Turn off the machine for 10 minutes after 4 hours of engraving.

English

English

Safe instructions

English

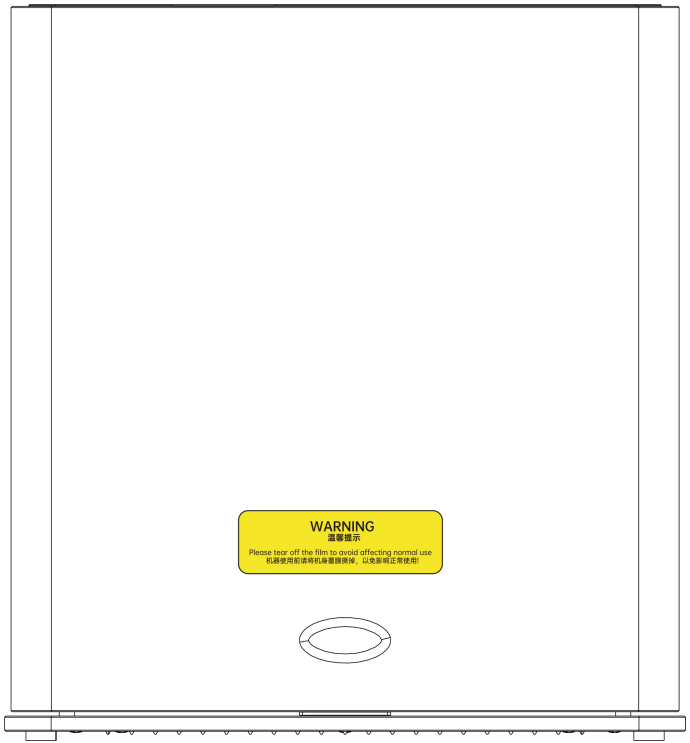

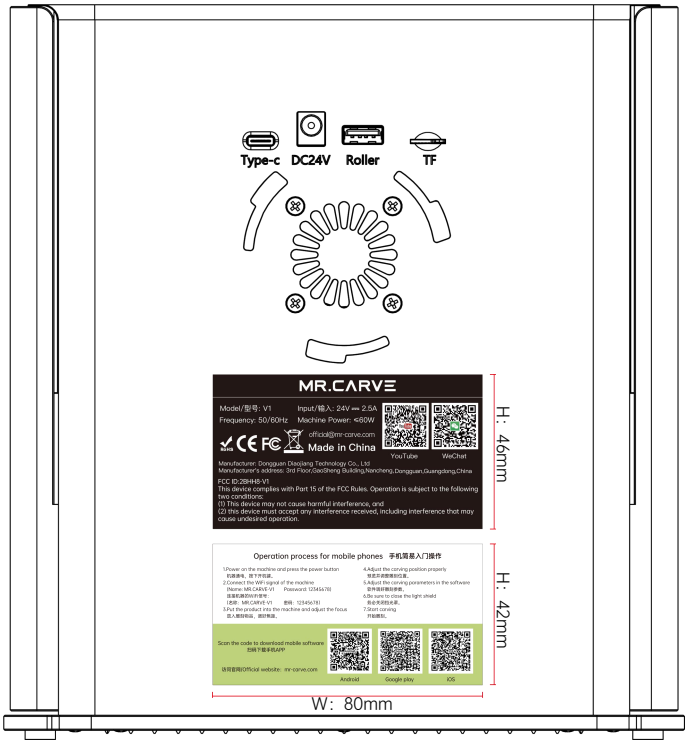

English

Content

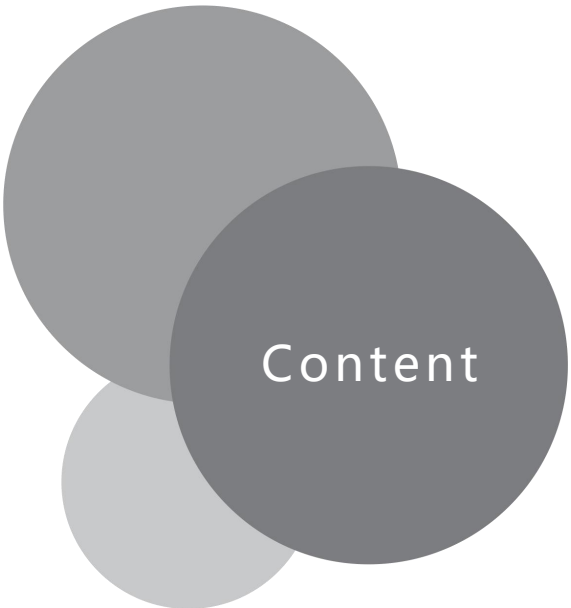

01 Product Parameters 07
02 Products and accessories 08
03 Product Mix 09
04 PC software installation 14
05 Mobile app download 18
06 Mobile connection 19
07 Computer connection 21
08 FAQ 22

English

01 Product Parameters

Model	V1
Main material	ABS+high strength metal
laser wavelength	blue light: 455nm Infrared light: 1064nm
Engraving speed	8000mm/min
Laser life	>10000h (27℃ ambient temperature)
Focus mode	fixed focal length
Engraving area	100x100mm
Engraving precision	±0.1mm
Height of carvings	< 50mm
Engravable Materials	Blue light can engrave most non-metallic materials, non-transparent materials (paper, wood chips, plastic, leather, fabric, cardboard, leather) Red light can engrave all metal materials and some non-metallic materials
Total power	≤ 60W
Input voltage	DC 24V 2.5A
data transmission	USB to serial wired transmission, WiFi wireless transmission
Cooling method	air cooling
support system	CutLabX software platform (windowsOS, macOS, Android, iOS) GRBL software platform (windowsOS, macOS)
Supported formats	CutLabX software platform -> Image formats: JPEG/BMP/JPG/GIF/PLT/PNG/CUTLABX -> Vector formats: DXF/PLT/HPGL GRBL software platform -> NC/BMP/JPG/PNG/DXF and other formats

English

02 Products and accessories

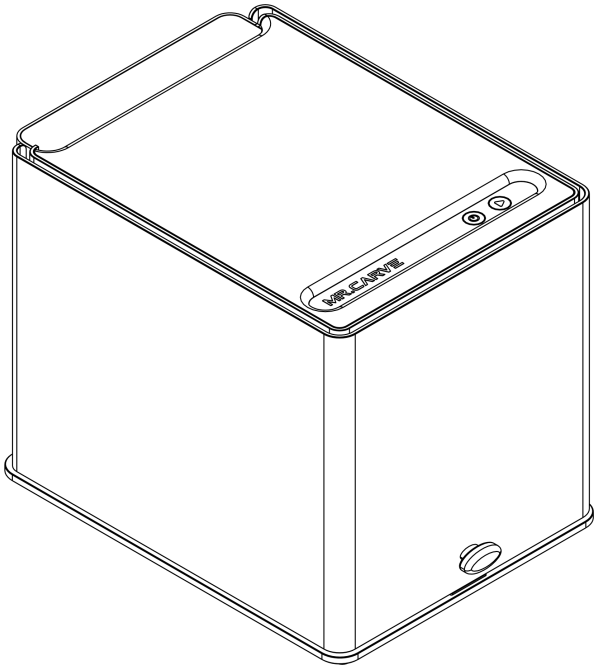

Standard Accessories

TF card

Card reader

power supply

Type-C cable

User Manual

Goggles

Brush

Paper

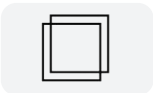

Wooden board

Optional Accessories

Heightening

Air purifier

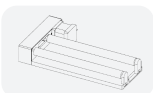

Rotation module

English

03 Product Mix

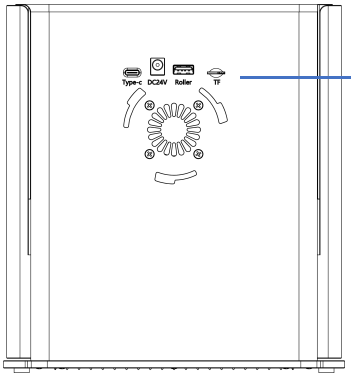

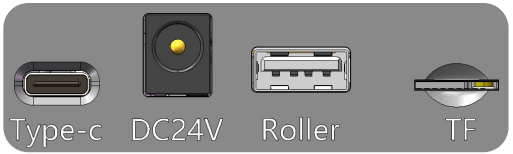

connect a computer

Power Input

Roller port

TF port

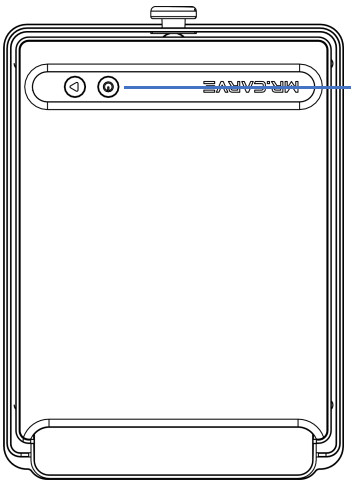

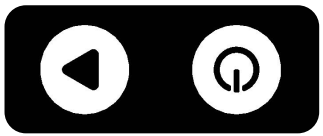

Offline engraving

power switch

1. Generate engraving or cutting files (gcode) through LightBurn software and save to the root directory of the TF card, save the name: 001.nc
2. Insert the TF card into the machine before turning on the machine, then use the matching power adapter and power cord to connect to the controller panel, and finally turn on the power switch on the side of the control panel.
3. Press the "Offline Key Function" button:

a. After pressing, the machine will automatically reset and preview

b. Press and hold for more than 3S to start engraving

c. Press again to pause

d. Short press again to continue

e. Press and hold for more than 3S again to cancel engraving

English

English

03 Product Mix

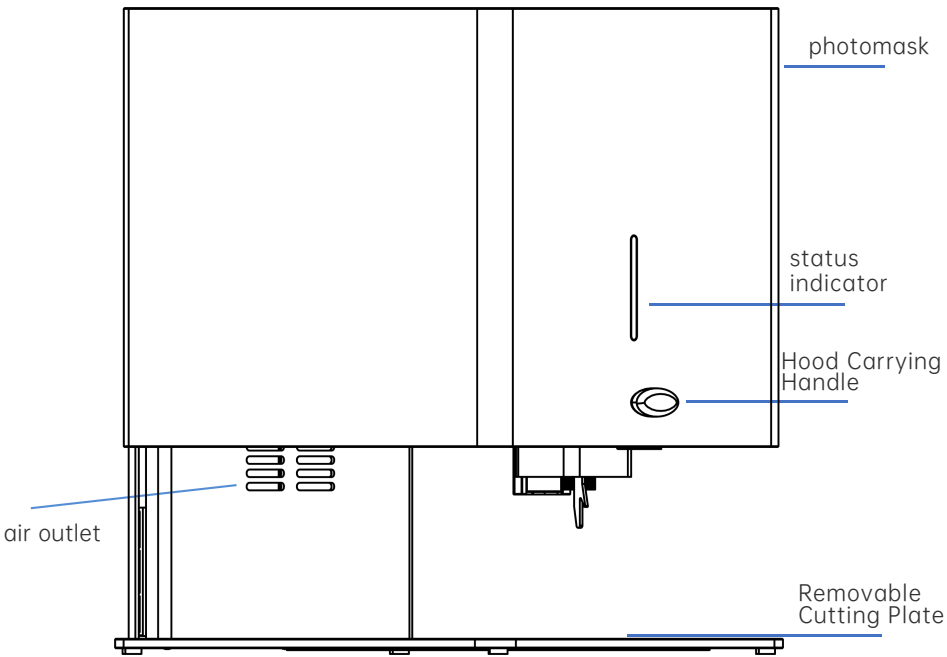

status indicator

1、Blinking(0.2S,0.2S):WiFi connection

2、Blinking(0.5S，0:2S):Warning Status

3、Blinking(0.5S,0.5S):open/tilt protection

4、Breathing blinking:carving status

5、Normal light:Standby status

English

English

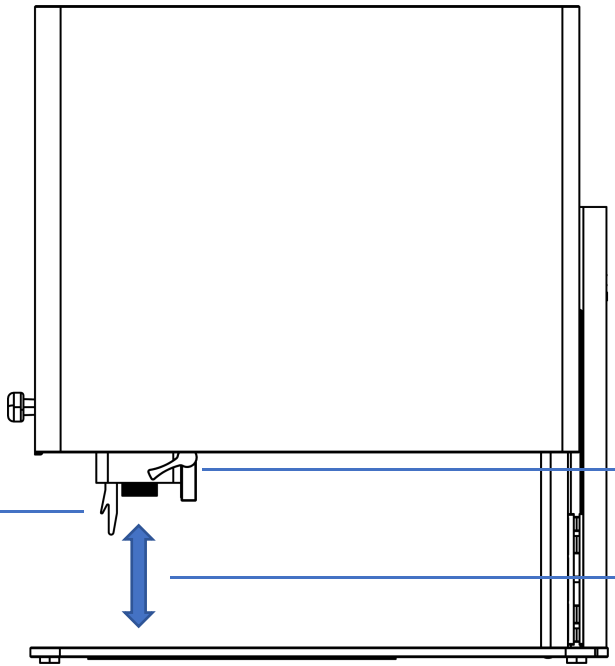

1、Remove the fixed focus block

2. Loosen the screws clockwise

3, the laser head down, fixed focus block touches the engraved product, first counterclockwise turn the set screw (step 2), and then collect the fixed focus block (step 1).

English

【 Light shield function description 】

When operating the machine, be sure to lower the light shield, otherwise the machine cannot be controlled; during the engraving process, the light shield raised will cause the laser module to stop outputting laser immediately.

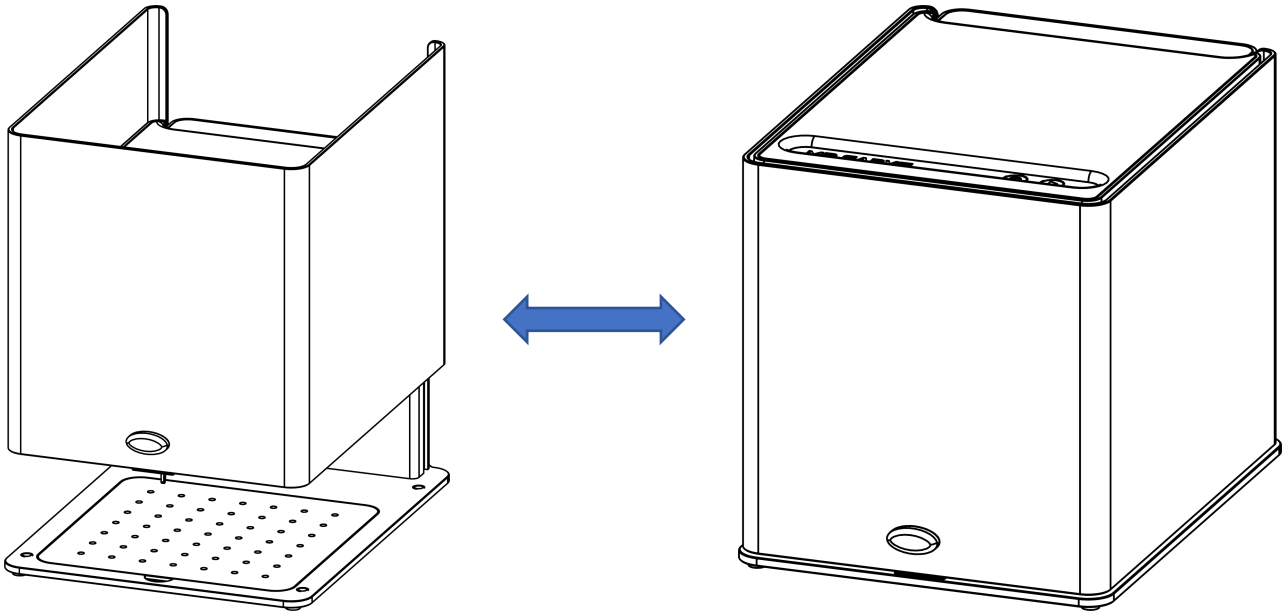

English

【Description of the tilt protection function】

If the inclination of the main machine and the horizontal plane is more than 12°±5°, and keep it for more than 1s, the machine stops running immediately, the laser module stops laser output, and enters into the protection state, and the machine has to be restarted to restore the normal function.

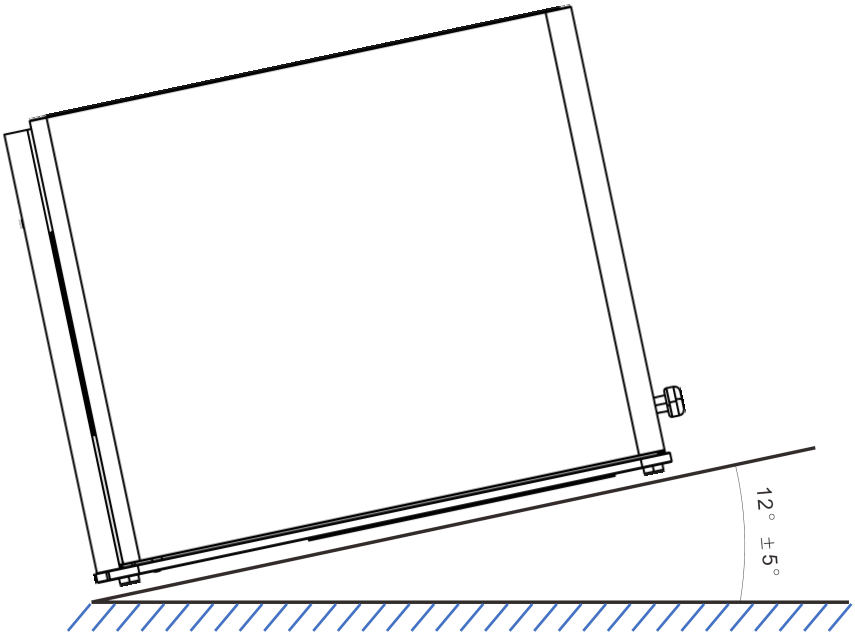

English

04 PC software installation

1. Driver installation path:

Double-click the U disk folder/windows/driver/driver.exe/Click to install/Driver installation is successful

【Method 1】:

Insert the supplied card reader into the TF card inside the machine and read the information about the software supplied with the machine.

① TF card

② 01_Windows

③ driver

④ driver.exe

【Method 2】:

Visit the official website for information

https://mr-carve.com

⑤ Click to install

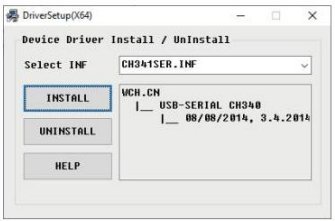

⑥ Confirm to complete the installation

*Driver software acquisition method: Download from the designated website www.mr-carve.com

English

English

04 PC software installation

2. Software installation path:

Double-click U disk data file/windows/software/ CutLabX/Wait for the progress bar to complete the installation

① TF card

② 01_Windows

③ software

④ CutLabX

⑤ Double-click CutLabX installation

⑥ Select the installation location and click "OK"

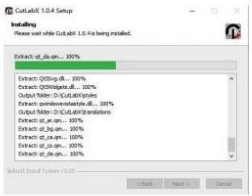

⑦ Wait for the progress bar to complete

⑧ Installation completed

3. Online operation:

Use a data cable to connect the machine to the computer

Double-click the software icon-enter the creation interface-select the appropriate port

Click "Connect" when it becomes "Connected" to indicate a successful connection.

① Double-click the software icon

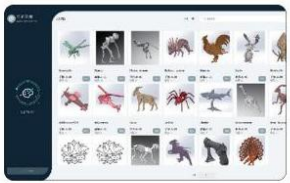

② Enter the homepage and click Start Creating

③ Select the appropriate port to connect

④ Connect successfully

Tip: If the antivirus software or computer manager pops up a risk prompt after clicking CutLabX, the CutLabX file is a Win system installation package.
If it is mistakenly identified as a suspicious file, please select Allow all operations of the program to successfully complete the software installation.

English

English

1. Driver installation path:

Driver installation path: Double-click U disk/02_MAC/driver/CH34x_Install_V1.4.pkg/Installation introduction/Installation type/Installation/Installation completed

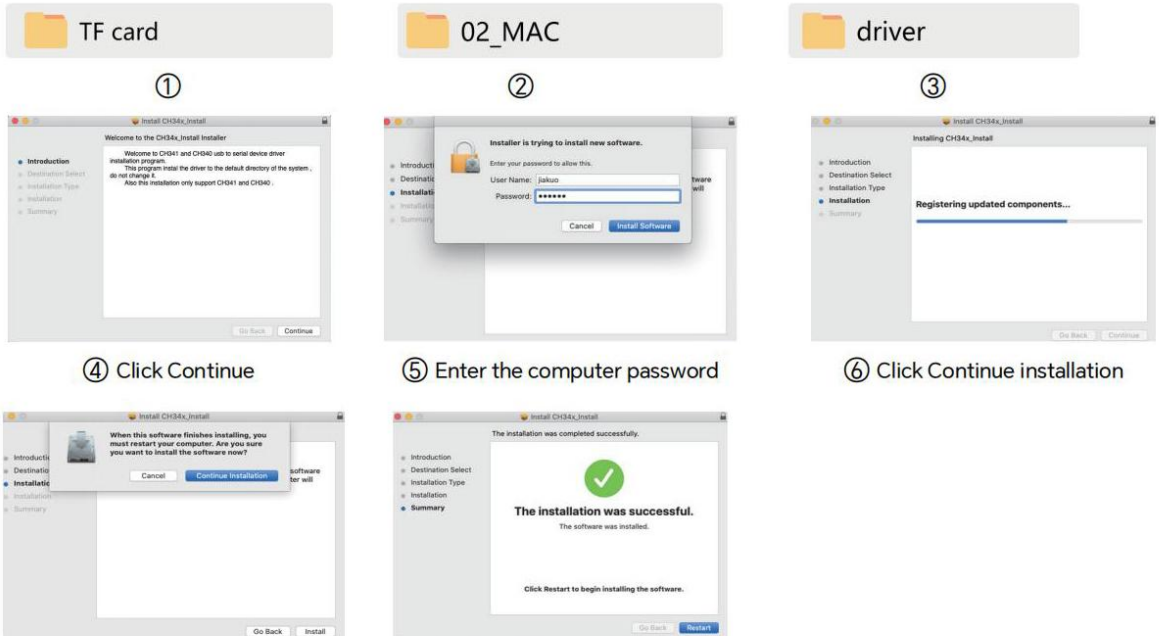

04 PC software installation

2. Software installation path:

Double-click the USB disk/02_MAC/software/CutLabX/software icon right/Complete the installation

⑤ Double-click the software icon

⑥ Drag the icon to the right of the Applications folder

⑦ Complete the installation

3. Online operation:

Use a data cable to connect the machine to the computer

Double-click the software icon-click the connection device icon-select the appropriate port

Click "Connect" when it becomes "Connected" to indicate a successful connection.

① Double-click the software icon

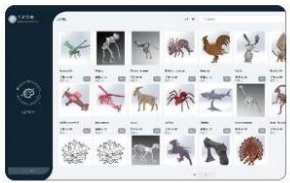

② Enter the homepage and click Start Creating

③ Select the appropriate port to connect

④ Connect successfully

Tip: When the machine is connected to MAC, you must select a name that begins with: W.ch.....

English

English

05 Mobile app download

Android Software Download and Installation

【Method 1】:

APP Download URLhttps://mr-carve.com

【Method 2】:

Scan the QR code to download

Google play

Note: Android system, open the browser to scan the QR code to download and install , after successful installation, you need to obtain the appropriate permissions, if necessary, manually open the software permissions

Apple Software Download and Installation

【Method 1】:

Search for "CutLabX" in the AppStore to download.

【Method 2】:

Scan the QR code to download

Apple store

English

English

06 Mobile connection

1. Steps for connecting the cell phone to the machine: Default WiFi

* Note: After the cell phone is successfully connected to the machine, there will be no network on the cell phone.

01 Power on the machine and turn it on

↓

02 Turn on your phone's WLAN and find the WIFI signal name MR.CARVE-V1, password: 12345678.

↓

03 After the WIFI connection is successful, open the CutLabX APP,Click the link mark in the upper right corner,
Enter 192.168.0.1 as the IP address,
and click "Connect" to complete the connection.

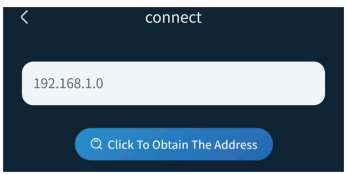

(Tip: When using WiFi mode, the machine and the mobile phone must be in the same WiFi network)

English

2. Steps to connect the phone to the machine: Home network

01

Turn on the device and turn it on

02

Connect the machine with a USB cable

03

Open the CutLabX software and enter the creation interface. The machine will automatically connect after recognition

04

The machine will automatically connect after recognition
(If it does not connect automatically, try a different COM)

05

Click the "WiFi Settings" button. Click to enter the WIFI name, home network password, and restart the machine

06

Turn on the WIFI on your phone, find the home network WiFi name, and enter your password

07

After the WIFI connection is successful, open the CutLabX APP and click the link mark in the upper right corner

08

"Click to get the address"

09

Click your IP address to get it, and click "Connect"

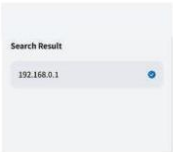

10

The connected IP is displayed, indicating that the connection is successful

(Tip: To use the WiFi mode, the machine and the phone must be in the same WiFi network)

English

English

3. Steps to connect the computer to the machine via USB

*Note: Install the driver according to your computer system (see driver installation instructions).

01 Turn on the machine and turn it on

02 Connect the MR.CARVE-V1 machine with a USB cable

03 Open CutLabX software and enter the creation page

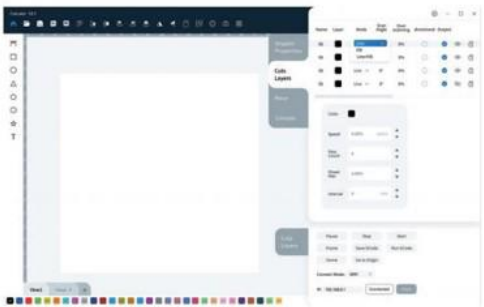

04 Automatically identify the machine and connect

(If it does not connect automatically, you may need to try another COM)

(Tip: When the machine is connected to a MAC, you must select the name that begins with: W.ch.....)

English

English

FAQ-Machine-related issues

Questions	Solutions
What type of laser source does the machine use?	It is a semiconductor laser
What happens if the machine loses power during operation?	When power is cut off during an engraving task, the laser head will remain in place. When the power is turned on again, the machine will initialize and will not continue to perform the original task.
Why can't the pattern be engraved at all (or the engraving is very shallow)?	The imported picture should be clear and the color should not be too light; before engraving, please make sure the focus is correct and the power, speed and time settings are appropriate.
What if the pattern is not engraved completely (or the depth is inconsistent)?	Please make sure that the engraving object is flat, the machine is level, and it has been adjusted normally according to the operating instructions.

English

FAQ-Machine-related issues

Questions	Solutions
How to focus the MR.CARVE-V1 laser engraving machine?	Place the material on the stage, lower the left knob to focus, and lock it after focusing. For example, engrave and cut a 2mm thick basswood board.
Will the working platform be damagedduring laser engraving?	During the engraving or cutting process, the laser may penetrate the object and leave marks on the work surface. Be sure to place an object that the laser cannot penetrate under the engraving object, such as: stainless steel plate, aluminum alloy plate, etc.
Why can't I start engraving when pressing the button on the host during offline engraving?	Make sure there is an engraving file in the root directory of the TF card and the TF card is inserted. Note:a. The machine reads the engraving file with the latest modification date in the root directory of the TF card by default. It is recommended to delete other irrelevant files in the root directory.b. This file can be generated by LaserGRBL, LightBurn, and CutLabX software, and the compatible format is NC. If GC is generated by default, please manually modify the file suffix to NC.
Why does the machine not respond after turning on?	a. Check whether the power plug on the machine end is fully plugged in. b. Check the electrical status of the power socket. c. Check whether the power switch and light shield on the machine are closed.

English

FAQ-Machine-related issues

Questions	Solutions
Why can't the machine connect to the computer after it is turned on?	a. Reinstall the driver. If the driver is displayed as installed, it means the driver is normal. When pre-installing the driver display, you need to check whether it is the original wiring or not connected to the machine. Please use a different port on your computer. b. Is the port selection correct? Some computers will have 2 ports when connected. Please ignore com1 and choose another com port. (The port number of the MAC must start with Wchusbserial to work properly) c. Close other software occupying the com port. When connecting using Lasergrbl, I cannot connect when opening CutLabX. You need to turn off Lasergrbl for normal use. * Note: In Lightburn, the machine can store multiple machine information, please select the appropriate configuration information according to the model.
Why can't the mobile phone be used after the machine is turned on?	a. Please use the mobile phone according to the manual. b. If the connection is abnormal due to incompatibility of the newly released mobile phone or system upgrade, please provide a screenshot of the mobile phone configuration and contact our customer service to get technical support as soon as possible.

English

FAQ- Engraving/cutting related questions

Questions	Solutions
What non-transparent materials can the MR.CARVE-V1 laser engraver engrave or cut?	Engraving: cardboard, wood, bamboo, rubber, leather, cloth, acrylic, plastic, etc.; Cutting: cardboard, wood, bamboo, cloth, leather, cloth, acrylic (transparent acrylic cannot be cut), plastic, etc.
Can it be engraved on curved materials?	Yes, but the curvature of the material and the area of the engraved image should not be too large, otherwise there will be slight deformation.
Can it be engraved on reflective/transparent materials such as ceramics/glass?	Yes, but before engraving, anti-reflective materials (such as laser colored paper, black marker) need to be applied to the surface of the material to ensure the engraving effect and prevent reflected light from damaging the laser module.
Why do materials of the same material but different colors have very different processing effects using the same G-code file?	Materials of different colors have different optical properties and absorb and reflect laser energy differently. When engraving materials of the same material but different colors, it is recommended to set different powers and speeds in the software.

English

FAQ- Engraving/cutting related questions

Questions	Solutions
There is a lot of smoke on the cut material, how to deal with it?	Please reduce the laser power and increase the speed appropriately.
Why can't the material be cut?	1. Make sure the machine and the engraving material are parallel to the work surface; 2. Make sure the laser module protective lens is clean; 3. Make sure the focus mode is correct; 4. Confirm the material thickness again and set it according to the recom-mended parameters in the random data; 5. Gradually increase the number of cuts, or appropriately reduce the cutting speed.

English

FAQ- Software related questions

Questions	Solutions
What software does the MR.CARVE-V1 laser engraver support?	LaserGRBL (free) - Real-time LightBurn (paid) - Real-time/offline 30-day trialCutLabX (free) - Real-time/offline/mobileDuring real-time engraving, be careful not to let the computer freeze or enter standby mode (do not lock the screen) to avoid affecting the engraving.
Where can I download these software?	LaserGRBL (https://lasergrbl.com/download/)LightBurn (https://lightburnsoftware.com/pages/trial-version-try-before-you-buy)CutLabX (www.cutlabx.com)
What image formats does the software support?	LaserGRBL (bmp/png/jpg/gif/svg) LightBurn (bmp/png/jpg/jpeg/gif/tif/tiff/tga/ai/pdf/sc/dxf/hpgl/plt/rd/svg)CutLabX (AI, PDF, SVG, DXF, PLT, PNG, JPG, GIF, BMP)
Where can I get tutorials for the software?	LaserGRBL (https://lasergrbl.com/usage/)LightBurn (https://lightburnsoftware.github.io/NewDocs/)CutLabX (www.cutlabx.com)

English

MR.CARVE

English

English

All contents on this material have been carefully checked, if there is any printing error or omission or any misunderstanding on the contents, you can consult with our company. Note: Any technical improvement of the products will be enhanced in the new version of the manual without prior notice. The appearance of the product, the color of any change, in kind shall prevail.

MR.CARVE

Laser Engraving Machine