GRIMTRON®

www.grimtrons.com

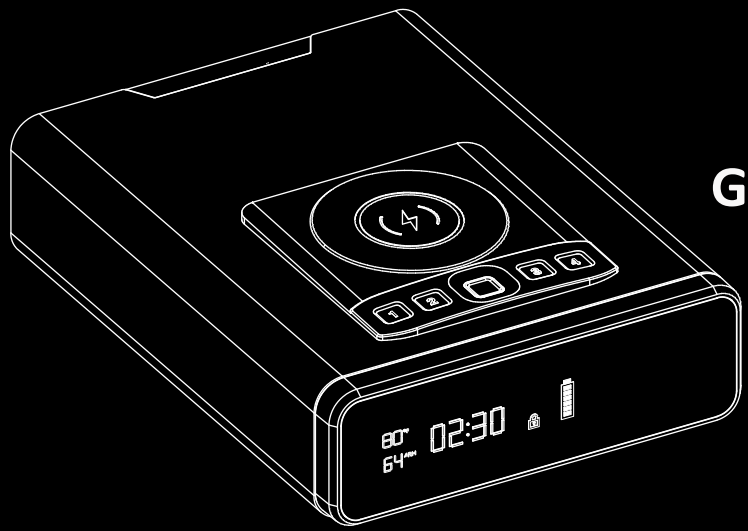

GRIMTRON® SMART SAFE

VT01 (BK+GY)

USER MANUAL

SETUP GUIDANCE

USE PHONE CAMERA

**Tip: Lower the volume before scanning.*

<Contact in a second>

Lock Away Worries

FAQs

Q: What should I do after receiving this box?

A: Please prepare 4 AAA alkaline batteries and install them at the back of the safe, than the screen, keypad, and fingerprint functionalities are all usable.

Q: How do I set the time for the screen?

A: Refer to *Page 5 of this manual - Setting Screen Time*.

Q: How can I use the wireless charging panel for my phone?

A: To use wireless charging, you need to connect the safe to a household power source using an adapter. Ensure that your phone has wireless charging capability. For detailed instructions, please refer to *Page 10 of this manual - Wireless Charging*.

Tips for Using LCD Screen

1 Touching the screen area (e in the right image) or unlocking the safe will wake up the clock.

2 The screen is equipped with batteries or power the safe.

3 If you need to use fingerprint or password to unlock the safe, please install batteries or connect the safe to a power source using an adapter.

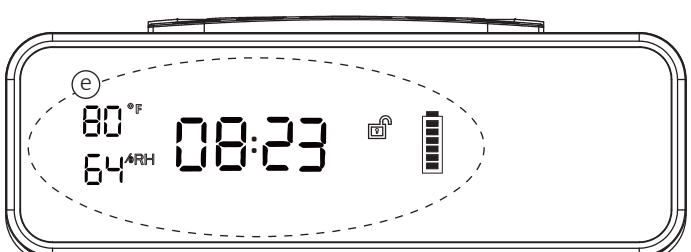

THANK YOU

At Grimtron®, we stand by our product and our customers. On behalf of the entire team, we sincerely thank you for your purchase. We believe that personal defense should be taken seriously, and we are thrilled for you to experience the ultimate performance in smart security.

TABLE OF CONTENTS

P1 - 1.1 Warnings
- 1.2 Disclaimers
- 1.3 Customer Support
P2 - 2 Product Introduction
P3 - 3.1 Battery Installation
- 3.2 Low Battery Warning
P4 - 4.1 LED Touch Screen - Status Indicators
- 4.2 LED Touch Screen - Always On Display
P5 - 4.3 LED Touch Screen - Set Time
P6 - 5 Set Password
P7 - 6.1 Biometric Scanner
P8 - 6.2 Set Fingerprints
- 6.3 Delete Fingerprints
P9 - 7 Security the Safe
P10 - 8 Emergency Port
- 9 Wireless Charging
P11 - 10 Lockout Mechanism
- 11 Silent Mode
P12 - * Return/Exchange Process
- * Linked Warranty (Terms and Conditions)

QUICK SETUP (SCREEN)

Step 1 Screen Touch Area (Page 4)
Step 2 Set Time (Page 5)

QUICK SETUP (SAFE)

Step 1 Battery Installation (Page 3)
Step 2 Set Password (Page 6)
Step 3 Set Fingerprints (Page 8)

*Please visit **www.grimtrons.com** to access the setup instructions, Registration, guides, and FAQs.*

1.1 WARNINGS

1. **DO NOT** use rechargeable batteries or any other type of non-alkaline battery.
2. **DO NOT** mix old and new batteries. **DO NOT** mix alkaline and standard batteries.
3. **DO NOT** lock the keys of this safe.
4. **DO NOT** leave the safe in extreme weather conditions. Battery power may be affected.
5. **DO NOT** store loaded firearms in this unit. Firearms are serious in nature and must be treated with respect and stored responsibly.

1.2 DISCLAIMERS

NEITHER THE SELLER NOR THE MANUFACTURER SHALL BE LIABLE FOR UNAUTHORIZED ACCESS, ANY INJURY, LOSS, OR DAMAGE TO PERSONAL PROPERTY DIRECT OR CONSEQUENTIAL ARISING OUT OF THE USE OF, OR THE INABILITY TO USE THE GRIMTRON® SAFE.

THE USER SHALL DETERMINE THE SUITABILITY OF THE GRIMTRON® SAFE FOR THE INTENDED USE, AND THE USER ASSUMES RISK AND LIABILITY WHATSOEVER IN CONNECTION THEREWITH. GRIMTRON® SAFE ARE NOT INTENDED TO PROTECT AGAINST ENVIRONMENTAL HAZARDS INCLUDING FIRE AND WATER.

1.3 CUSTOMER SUPPORT

If you have any issues with your safe deposit box, please Contact in a second through *grimtrons.com* or email (*service@grimtrons.com*).
We will respond to within 12 hours of receiving it.

<SCAN IT TO CONTACT IN A SECOND>

2 PRODUCT INTRODUCTION

The Grimtron® Smart Safe is a rugged and durable biometric access safe. Its sturdy structure and penetration-resistant design make it ideal for storing valuable items such as firearms, jewelry, cash, and personal belongings. The safe combines advanced security with comprehensive access control.

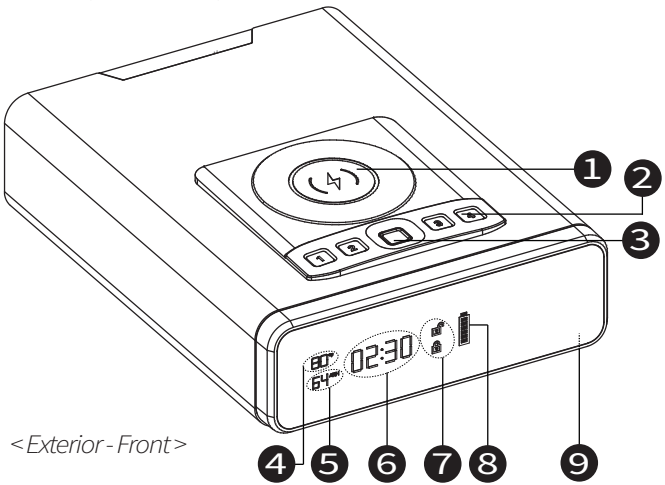

< Exterior - Front >

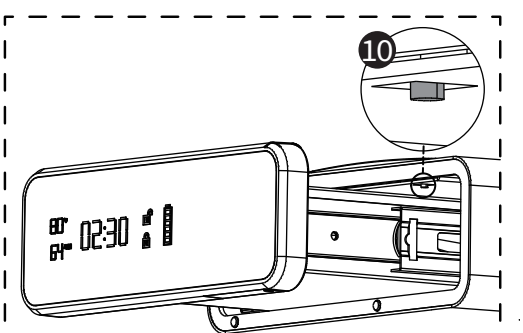

1 Wireless Charger Pad
2 Digital Keypad
3 Biometric Scanner
4 Temperature
5 Humidity
6 Time
7 Lock Status
8 Battery Power
9 Screen's Battery Compartment
10 **Set** Button
11 Internal LED
12 Display Program Button P1
13 Display Program Button P2
14 Safe's Battery Compartment
15 Keys Hole
16 Security Cable Hole
17 Adapter Hole
18 Combined Interface *(USB and Type-C)*

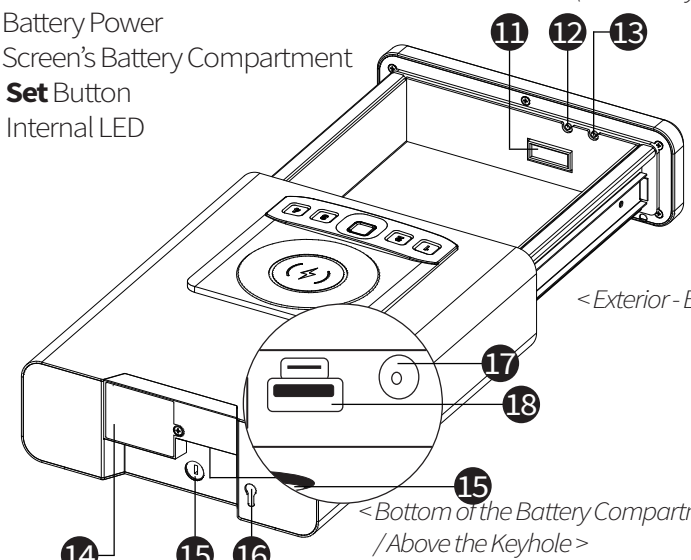

< Exterior - Back >

< Bottom of the Battery Compartment / Above the Keyhole >

grimtrons.com service@grimtrons.com

3.1 BATTERY INSTALLATION

First, please install batteries for the safe. The safe can also be powered using combined interface (USB and Type-C)(b) or an adapter(c).

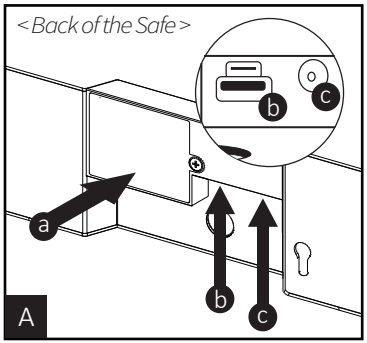

Installing the safe battery (a in Figure A)

STEP 1 At the back of the safe, locate the battery compartment.

STEP 2 Use a screwdriver to remove the screws and take off the battery cover.

STEP 3 Install the 4 AAA batteries (not include) properly according to the indicated direction.

STEP 4 Cover the battery compartment and tighten the screws.

After installing the safe battery, the keypad's BLUE light will flash briefly, accompanied by a beep. At the same time, the biometric scanner's BLUE light will also flash briefly.

TIPS:

- The positive terminal of the battery is usually slightly raised and may have a plus sign (+) next to it.
- The negative terminal is typically flat and may have a minus sign(-) next to it.
- Ensure that you align the positive terminal of the battery with the positive indication in the slot and the negative terminal with the negative indication.

NOTE

(1) Please use alkaline or carbon batteries.

(2) Using other types of batteries may render the safe inoperable.

(3) **Do not** mix old and new batteries.

(4) The safe **cannot** be powered by rechargeable batteries.

(5) **Do not** attempt to charge any batteries inside the safe.

3.2 LOW BATTERY WARNING

- When the battery voltage is **below 5.1V**, entering the correct password or fingerprint will cause the keypad BLUE light to turn on for 1s and then turn off. Afterward, the keypad BLUE light will flash 10 times by 10 beeps.

  This indicates low battery power, and you should replace the batteries *(in Silent Mode, only the keypad BLUE light will be visible)*. However, the safe can still be unlocked.

- When the battery voltage is **below 4.6V**, entering the password or fingerprint will cause the biometric scanner to flash a RED light for 2s, indicating that the voltage is too low and the system automatically locks, preventing the use of the keypad and fingerprint for opening the safe.

4.1 LED TOUCH SCREEN - STATUS INDICATORS

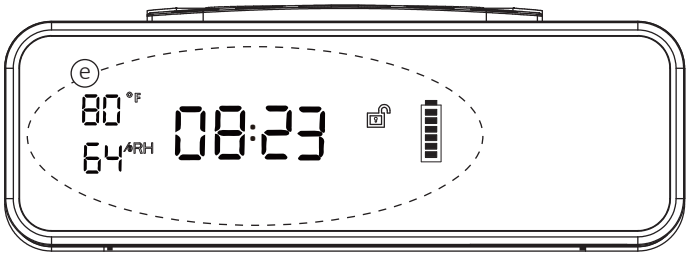

< Front of the Screen >

After installing the battery in the display screen, touch the display screen area (e) to wake it up. The display screen will provide visual feedback.

Door Lock Open State

After the safe is successfully unlocked, the display screen shows 🔓 .

Door Lock Closed State

After the safe is locked, the display screen shows 🔒 .

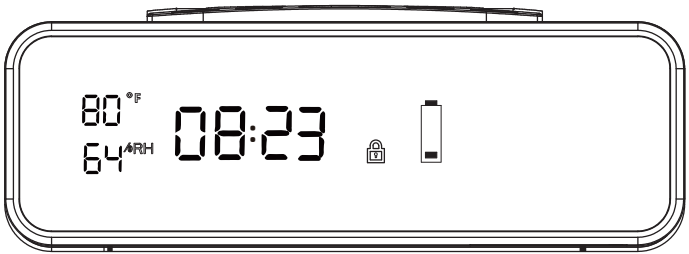

< Front of the Screen >

Battery Status

The battery level display on the screen is divided into 6 bars, with all bars indicating a full battery. When the battery level is low, the display shows either one bar or the battery outline/zero bars.

When the screen's battery display shows one bar or the battery outline/zero bars, it is necessary to replace the screen's battery promptly.

NOTE

Low battery on the display screen will not affect the unlocking of the safe.

4.2 LED TOUCH SCREEN - ALWAYS ON DISPLAY

When the safe is used with an adapter, you can set the screen to stay on continuously.

1>Touch any number key to wake up the keyboard.
After the keyboard lights up, press and hold the number **4** to turn off the screen's stay-on feature.

Note: Touch the screen to wake it up, and the display will turn off after 8 seconds.

2>Touch any number key to wake up the keyboard.
After the keyboard lights up, press and hold the number **4** to turn on the screen's stay-on feature.

4.3 LED TOUCH SCREEN - SET TIME

After waking up the display screen, you can independently view the temperature/humidity or quickly check the status of the safe.

The time on the display screen needs to be manually adjusted, and whenever the display screen loses power, the time will reset to the default setting.

TIPS

- Only supports the 24-hour clock time format.
- The temperature and humidity cannot be modified.
- If the display shows "9" and you press **P2**, it will reset to "0".
- After modifying all four positions of the time, if there is no further input on the display, it will automatically complete the setting and exit the time setting procedure after 9s.

Setup time (Figure C&D)

STEP 1 Press and hold the **P1** button for 5s without releasing it. The digit "*m2*" in the time display will start flashing. Release the **P1** button to enter the time setting procedure.

STEP 2 Press the **P2** button once and release it immediately. The digit 3 in the "*m2*" position will increase to 4. Press the **P2** button again and release it immediately, and the digit 4 will increase to 5.
*(If no modifications are made to the flashing digit, press the **P1** button once and release it immediately to move the flashing position to the left.)*

STEP 3 After confirming the digit in the "*m2*" position, press the **P1** button once and release it immediately. The digit "*m1*" will start flashing. Press the **P1** button once and release it immediately, and the digit 2 in the "*m1*" position will increase to 3.

STEP 4 After confirming the digit in the "*m1*" position, press the **P1** button once and release it immediately. The digit "*h2*" will start flashing.
Press the **P1** button once and release it immediately, and the digit 8 in the "*h2*" position will increase to 9.

STEP 5 After confirming the digit in the "*h2*" position, press the **P1** button once and release it immediately. The digit "*h1*" will start flashing. Press the **P1** button once and release it immediately, and the digit 0 in the "*h1*" position will increase to 1.
*(If no modifications are made to the flashing digit, press the **P1** button once and release it immediately to move the flashing position to the "m2" position.)*

STEP 6 Once all four positions of the time are modified correctly, press and hold the **P1** button for approximately 5s until all positions stop flashing. Release the P1 button to successfully complete the time setting.

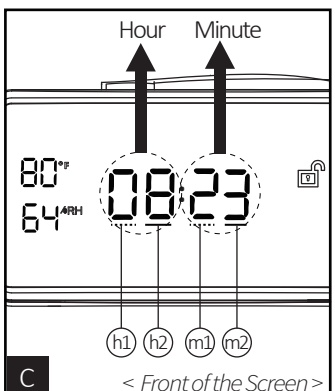

C

< Front of the Screen >

< Inner Side of the Screen Panel >

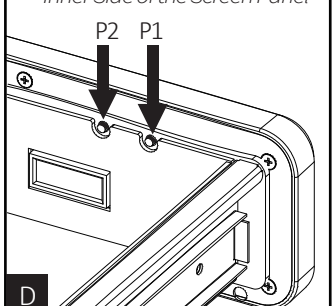

D

grimtrons.com service@grimtrons.com

5 SET PASSWORD

First time users should change the default password as soon as possible to prevent unauthorized access to your safe.

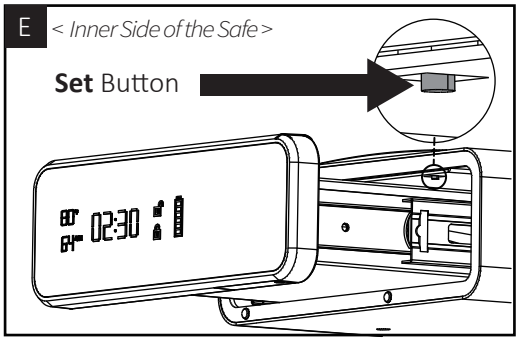

STEP 1 When the safe is unlocked, press and hold the **set** button for 5s, the keyboard BLUE light flashes 2 times, after releasing the **set** button, the biometric scanner BLUE light is on, enter the setting procedure(Figure E).

STEP 2 Enter your NEW 4-8 bit password (touch the keyboard once the keyboard BLUE light flashes once, the beeps once).

STEP 3 After then press (immediately release) the **set** button to confirm.

STEP 4 Password set successfully, the keyboard light BLUE light flashes twice, while the beeps twice.

STEP 5 You can test the password to confirm the charge was successful. Touch any of the digital keys, the keypad BLUE light up, enter the password you just set.

**** When testing the new password, please keep the door open and only turn the lock.**

!! *If you make a mistake and the new password will not word, simply start over with STEP 1.*

TIPS

- Default password os 1234.
- Once the new password is successfully set, the old password will become invalid.
- Only one password can be set. Repeat the process of setting only to change the password.
- Passwords cannot be deleted; they can only be overwritten.
- The **set** button cannot be used as any of the digits in the password.

NOTE

In the process of setting the password, if the BLUE light of the safe keyboard flashes 5 times, the fingerprint lights up RED and beeps 5 times, the password are set failed.
Please avoid the following situations.

(1) The new password entered is less than 4 digits and more than 8 digits.

(2) After entering the setting procedure, there is no operation.

(3) After entering the password, press the **set** button for 5s.

6.1 BIOMETRIC SCANNER

Biometric fingerprint functionality is a highly secure and reliable identity verification technology. It utilizes the unique fingerprint characteristics of each individual to ensure that only authorized users can access it. By analyzing the patterns of ridges, valleys, and minutiae points on the fingerprint, biometric fingerprint functionality can accurately identify and verify user identities within milliseconds.

Due to the uniqueness of each person's fingerprint, biometric fingerprint functionality offers higher security than traditional authentication methods such as passwords or cards. It is nearly impossible to impersonate or forge, thereby safeguarding critical information and valuable assets of individuals and organizations.

The safe can store fingerprint data for up to 20 authorized users, ensuring that this data is encrypted and protected. The registration of a user involves scanning the same finger three times. Even in the event of device loss or theft, unauthorized individuals cannot access sensitive information or resources.

Tips for Setting up Fingerprints

Place the core of the fingerprint flat over the center of the scanner (this allows the scanner to read where most of the fingerprint detail is located) see (Figure F).

- Rotate your finger slightly between registration scans to store print variations for increased accuracy.
- Excessive moisture, lotions, or dirt will affect your fingerprint and may cause inaccurate sensor reading.
- Troubleshooting! If you are having difficulty with your print, set the same fingerprint 4 or 5 times. You have 20 slots available for setting and you can also try your thumb as it has more surface area to read.

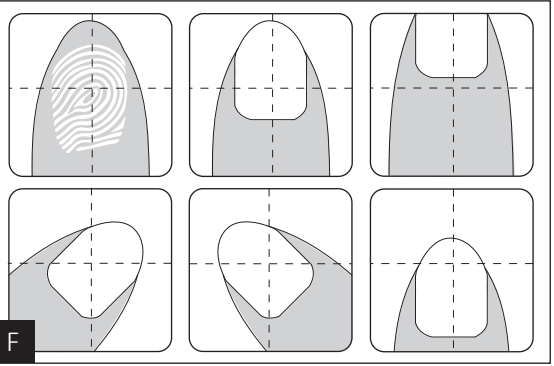

F

NOTE

- Place your finger on the biometric scanner. The biometric scanner will light up with a BLUE light. If the fingerprint is correct, the biometric scanner will light up with a GREEN light, and the keypad will illuminate with a BLUE light, indicating that the safe is successfully unlocked.
- If the fingerprint comparison fails, the biometric scanner will light up with a RED light, and the keypad will flash with a BLUE light 5 times and 5 beeps.

6.2 SET FINGERPRINTS

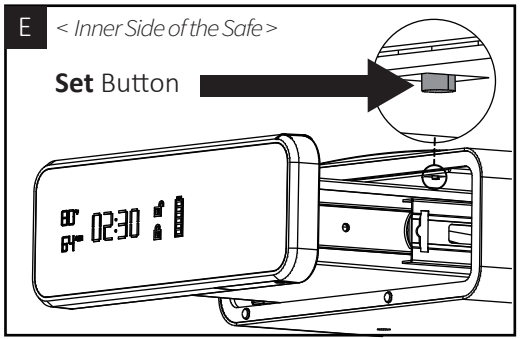

STEP 1 When the safe is in the unlocked state, press and hold the **set** button for morethan 5s. The keypad's BLUE light will flash twice. After releasing the **set** button, the biometric scanner's BLUE light will illuminate, entering the setup procedure(Figure E).

STEP 2 Place your finger on the biometric scanner three times. Each successful enrollment will be indicated by a brief flash of the GREEN light and a beep. Remove your finger and place it on the biometric scanner again, repeating this process three times consecutively.

STEP 3 Upon successful fingerprint setup, the biometric scanner will emit a GREEN light, and the keypad's BLUE light will flash twice and beeps twice.

STEP 4 You can test the fingerprint to confirm the charge was successful. Enter the fingerprint you just set.

**** When testing the new fingerprint, please keep the door open and only turn the lock.**

!! *If you make a mistake and the new fingerprints will not word, simply start over with STEP 1.*

TIPS

- ▶ Each fingerprint requires 3 registration scans to be enrolled into the safe.
- ▶ The process of repeating the fingerprint setup allows you to store the second, third... up to the twentieth fingerprint.

NOTE

- Fingerprint storage limit reached notification:

When you try to enroll a new fingerprint and the storage capacity has been reached, the keypad's BLUE light will flash 10 times, accompanied by 10 beeps.

6.3 DELETE FINGERPRINTS

STEP 1 Press and hold the **set** button, and you will hear a beep (3s). The keypad's BLUE light will flash briefly.

STEP 2 Continue holding the **set** button until you hear two beeps (6s). The keypad's BLUE light will flash twice. At the same time, the fingerprint indicator will illuminate with a GREEN light. Release the **set** button. The fingerprint data has been successfully cleared.

Note: Pressing and holding the **set** button will only clear the fingerprint data. The password will not be deleted and will remember the last correctly set password.

7 SECURITY THE SAFE

7.1 Using Steel Security Cable

STEP 1 When the safe is in the unlocked state, loop the security cable around a secured object.

STEP 2 Run the and of the cable through the eye of the other end and pull tight around the object.

STEP 3 Open safe drawer, and insert the clamped end of the security cable into the rear slot (Figure G).

STEP 4 Slide the cable end all the way down (Figure H).

STEP 5 Shut the safe drawer to lock the security cable in place (Figure H).

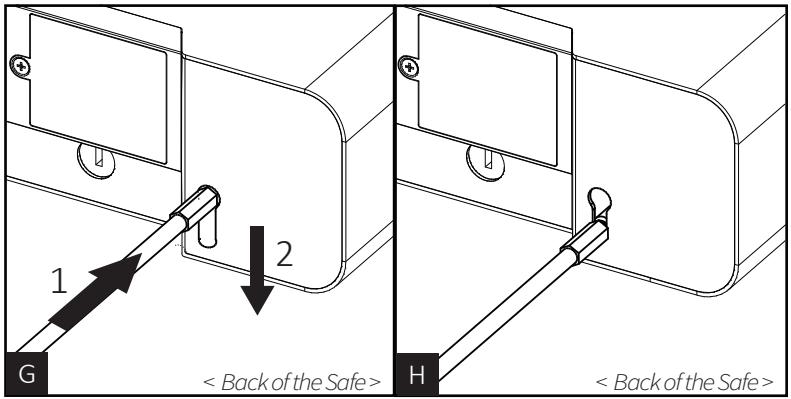

8 EMERGENCY PORT

In the event that the battery of the safe is low or no batteries are installed, making it impossible to unlock the safe, you can utilize the emergency interface as an auxiliary method to unlock the safe.

The emergency interface supports three types of interfaces (Figure L): combined interface (USB and Type-C)(b) or an adapter(c).

By connecting to the emergency interface of the safe, you can use an external power source to supply power and unlock the safe.

This ensures that even in cases of low battery power, you can effortlessly access the contents of the safe.

We are committed to providing multiple solutions to ensure the reliable protection of your valuable items within the safe.

NOTE

These two emergency interfaces:

(1) Can only provide power to the safe.

(2) Cannot be used to charge the safe.

(3) Cannot provide power to the display screen of the safe.

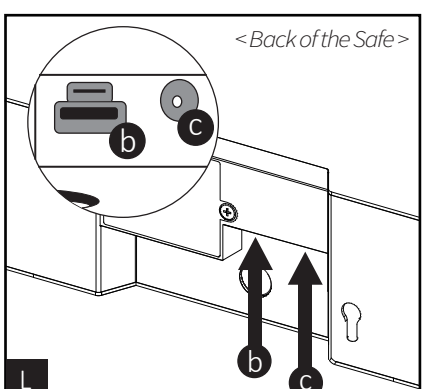

9 WIRELESS CHARGING

Wireless charging must be used in the power supply mode by connecting to an adapter or USB interface.

Place a smartphone with wireless charging capability on the wireless charging pad (j in Figure J), and the wireless module will automatically detect the phone for charging. You can observe the charging symbol on the phone screen, indicating that the charging process is in progress.

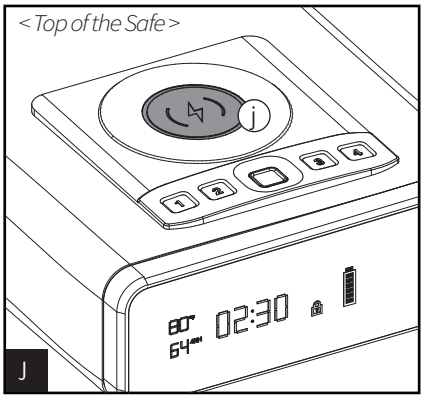

NOTE

(1) When the safe is equipped with batteries and not connected to an adapter or using a USB interface, wireless charging will not work.

(2) Phones without wireless charging capability cannot use the wireless charging pad.

(3) To ensure proper functionality of wireless charging, please use a thin phone case or remove the phone case altogether.

10 LOCKOUT MECHANISM

The safe will be locked for 5 minutes in the following two situations:

<1> If the password or fingerprint is entered incorrectly 5 times in a row.

<2> If there are a cumulative total of 5 incorrect entries, combining both password and fingerprint.

The alarm and lockout will stop once the power is disconnected, and the safe can be unlocked by entering the correct password.

NOTE

(1) All keypad buttons will be disabled.

(2) During the lockout period, entering the password or fingerprint will be ineffective.

(3) The keypad's BLUE light will flash and the safe will emit beeping sounds during the lockout period.

11 SILENT MODE

Entering Silent Mode:

During the press the **1** on the keypad and don’t release it, the safe emits a sound and the keypad's BLUE light flashes briefly. Continue holding it until the keypad's BLUE light flashes again, indicating that silent mode has been successfully activated.

Exiting Silent Mode:

During the press the **1** on the keypad and don’t release it, the safe emits a sound and the keypad's BLUE light flashes briefly. Continue holding it until the keypad's BLUE light flashes again and the safe emits a sound, indicating that successfully exit from silent mode.

* RETURN/EXCHANGE PROCESS

If you decide to return/exchange the safe, you can contact the customer service department of the merchant through email *(service@grimtrons.com)*or online chat on *grimtrons.com.*

Provide relevant information such as the order number, product details, and the reason for the return/exchange, so that they can assist you better in handling the return/exchange process.

* LINKED WARRANTY(TERMS AND CONDITIONS)

Grimtron® is committed to building high-quality products and will make every effort to ensure our products are free from any defects. We warrant to the purchaser that the Grimtron® safe will be free from defects in materials or workmanship for a period one year from the date of purchase.

This warranty does not cover abuse, misuse, use in any manner for which is not designed, neglect, modification, damage inadvertently caused by the owner, accidents, and/or tampering. Any damage to the Grimtron® safe as a result of misuse, tampering, abuse, neglect, accident, improper installation, modification, unauthorized service, destruction, or the alteration of the serial number, or use violation of the instructions furnished by the Company will void this warranty.

These warranties are not assignable or transferable to any other person. The sole responsibility of the Company shall be limited to the repair or replacement (in its sole discretion) of any component of the Grimtron® safe which fails to conform to this warranty at no cost to the purchaser for the period of the warranty.

If you safe is determined to be defective, and we are responsible for the cause, we will have it repaired at our expense, or we will send a new replacement at no cost to you. You will be required to return your existing unit as well as all included accessories to Grimtron® prior to replacement of the defective unit along with your order of purchase.

If it is determined your safe needs to be returned, please contact our customer support team, and them will provide you with a return detail.

GRIMTRON®

Lock Away Worries

www.grimtrons.com service@grimtrons.com

The Grimtron® word mark and logo are trademarks owned by Grimtron® owner.

FCC WARNING

This device complies with part 15 of the FCC Rules. Operation is subject to the following two conditions: (1) this device may not cause harmful interference, and (2) this device must accept any interference received, including interference that may cause undesired operation.

Any changes or modifications not expressly approved by the party responsible for compliance could void the user's authority to operate the equipment.

NOTE: This equipment has been tested and found to comply with the limits for a Class B digital device, pursuant to Part 15 of the FCC Rules. These limits are designed to provide reasonable protection against harmful interference in a residential installation. This equipment generates, uses and can radiate radio frequency energy and, if not installed and used in accordance with the instructions, may cause harmful interference to radio communications.

However, there is no guarantee that interference will not occur in a particular installation. If this equipment does cause harmful interference to radio or television reception,

which can be determined by turning the equipment off and on, the user is encouraged to try to correct the interference by one or more of the following measures:

-- Reorient or relocate the receiving antenna.

-- Increase the separation between the equipment and receiver.

-- Connect the equipment into an outlet on a circuit different from that to which the receiver is connected.

-- Consult the dealer or an experienced radio/TV technician for help.

To maintain compliance with FCC' s RF Exposure guidelines, This equipment should be installed and operated with minimum 20cm distance between the radiator and your body: Use only the supplied antenna.