BH-T3

RETRO CASSETTE PLAYER WITH USB/SD, BLUETOOTH, FM RADIO, ENCODING, BUILT-IN SPEAKER AND MICROPHONE

INSTRUCTION MANUAL

READ THIS INSTRUCTION MANUAL CAREFULLY BEFORE USE

PRODUCT FEATURES

- CASSETTE PLAYER WITH PLAY / PAUSE / FAST FORWARD / REWIND / RECORD / STOP / EJECT FUNCTION
- BLUETOOTH RECEIVER FOR WIRELESS MUSIC STREAMING
- USB/SD SLOT FOR MP3 PLAYBACK
- RECORDING TO USB/SD FROM CASSETTE / RADIO / MICROPHONE IN MP3 FORMAT
- BUILT-IN MICROPHONE
- EARPHONE JACK
- FM RADIO
- BUILT-IN SPEAKER
- USB CABLE INCLUDED

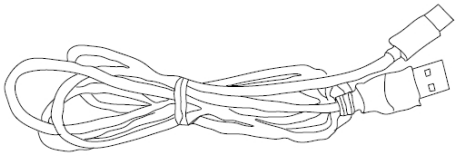

LOCATION OF CONTROL

1) VOLUME KNOB
2) BASS KNOB
3) TELESCOPIC ANTENNA
4) CASSETTE – PAUSE
5) CASSETTE- STOP/EJECT
6) CASSETTE – FAST FORWARD
7) CASSETTE – REWIND
8) CASSETTE – PLAY
9) CASSETTE – RECORD
10) FUNCTION SWITCH
11) POWER ON/OFF SWITCH
12) TUNING KNOB
13) USB/SD - SKIP DOWN⏮
14) USB/SD - PLAY/PAUSE⏯
15) USB/SD - SKIP UP⏭
16) USB/SD - RECORD
17) USB/SD - MODE
18) EARPHONE JACK
19) LED INDICATOR
20) BUILT-IN MICROPHONE
21) SPEAKER
22) CASSETTE DOOR
23) DIAL SCALE
24) SPEAKER
25) BATTERY COMPARTMENT DOOR
26) USB PORT FOR POWER
27) USB SLOT
28) VENTILATION
29) SD/MMC CARD SLOT

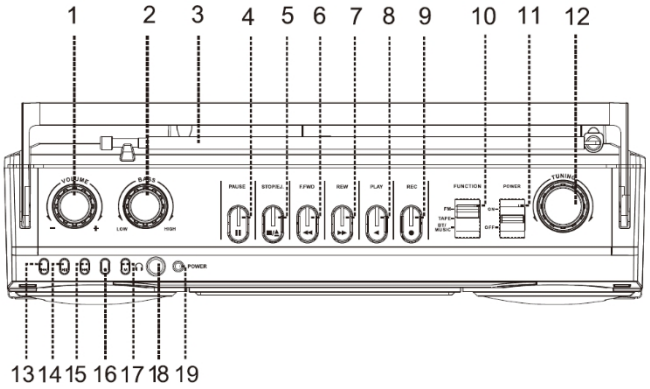

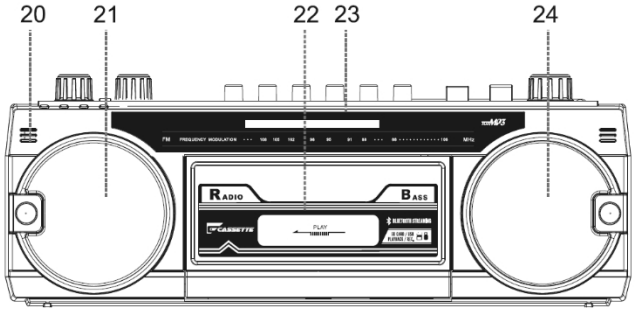

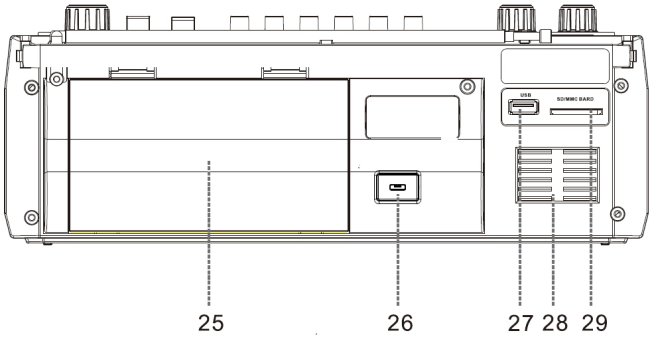

CAUTION:
USAGE OF CONTROLS OR ADJUSTMENTS OR PERFORMANCE OF PROCEDURES OTHER THAN THOSE SPECIFIED HEREIN MAY RESULTE IN HAZARDOUS RADIATION EXPOSURE.
THIS UNIT SHOULD NOT BE ADJUSTED OR REPAIRED BY ANYONE EXCEPT QUALIFIED SERVICE PERSONNEL.

PRECAUTIONS FOR USE

INSTALLATION

- UNPACK ALL PARTS AND REMOVE PROTECTIVE MATERIAL.
- DO NOT CONNECT THE UNIT TO THE MAINS BEFORE CHECKING THE MAINS VOLTAGE AND BEFORE ALL OTHER CONNECTIONS HAVE BEEN MADE.
- DO NOT COVER ANY VENTS AND MAKE SURE THAT THERE IS A SPACE OF SEVERAL CENTIMETERS AROUND THE UNIT FOR VENTILATION.

CONNECTION

1. CONNECT USB CABLE (INCLUDED IN PACKAGE) WITH **USB PORT FOR POWER** AT BACK PANEL AND TRAVEL POWER ADAPTOR (NOT INCLUDED IN PACAKGE):

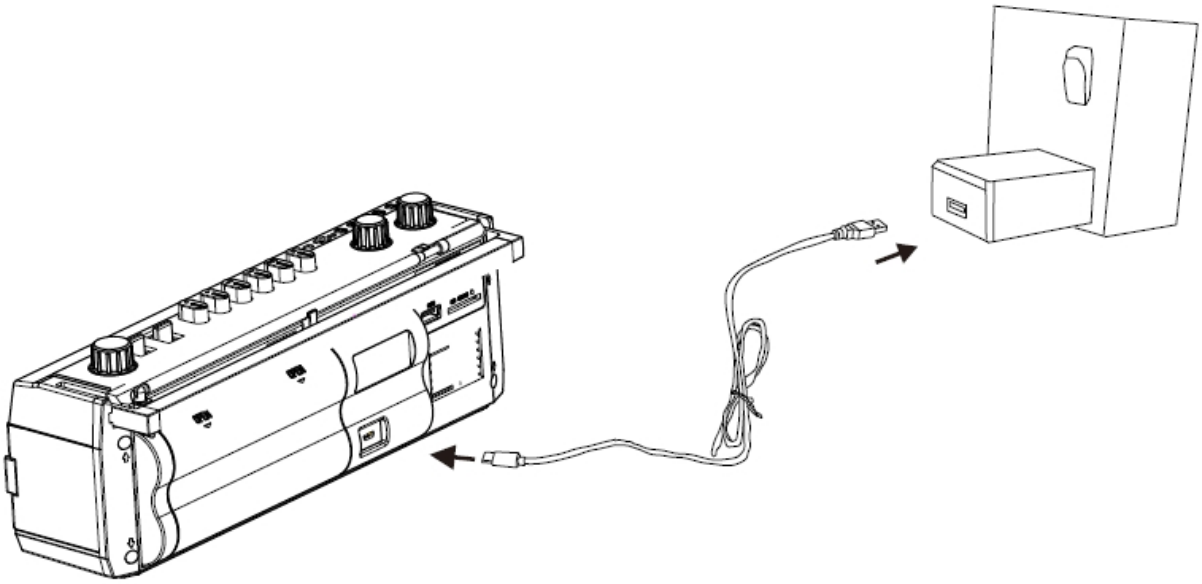

2. TRAVEL POWER ADAPTOR NEEDS OUTPUT 5V 2A, AS SAME AS ADAPTOR FOR MOBILE PHONE.
3. TURN ON THE UNIT BY **POWER ON/OFF SWITCH**.
4. DURING MUSIC, SELECT DESIRED VOLUME BY TURNING **VOLUME KNOB**, SELECT DESIRED BASS LEVEL BY **TURNING BASS KNOB**.

LISTENING TO FM RADIO

1. SELECT **FUNCTION SWITCH** TO SELECT FM MODE.
2. TURN **TUNING KNOB** TO SELECT RADIO CHANNEL.
3. THE RECEIVER HAS A BUILT-IN FM WIRE ANTENNA HANGING AT THE REAR CABINET. THIS WIRE SHOULD BE TOTALLY UNRAVELED AND EXTENDED FOR BEST RECEPTION.

CASSETTE TAPE & RECORDING

STOP / EJECT: PRESS TO STOP ALL DECK OPERATION. PRESS AGAIN TO OPEN THE CASSETTE DOOR.

FAST FORWARD: PRESS TO START, FAST FORWARD WINDING THE TAPE.

FAST REWIND: PRESS TO START, FAST REWIND WINDING THE TAPE.

PLAY: PRESS TO START PLAYING TAPE.

PAUSE: PRESS TO STOP TAPE OPERATION TEMPORARILY. PRESS AGAIN TO RESUME PLAYBACK.

RECORD: PRESS TOGETHER WITH **PLAY BUTTON** TO START TAPE RECORDING. TAPE CAN BE RECORDED FROM RADIO, BLUETOOTH, BUILT-IN MICROPHONE, USB AND SD DEVICE.

PLAYBACK
- SELECT **FUNCTION SWITCH** TO SELECT TAPE MODE
- PUT IN CASSETTE TAPE.
- PRESS **PLAY BUTTON** ON CASSETTE DECK TO START PLAYBACK.
- USE **PAUSE BUTTON** WHEN YOU WANT TO STOP PLACKBACK TEMPORARILY.
- PRESS **STOP / EJECT BUTTON** WHEN FINISHED.

RECORDING TO TAPE FROM RADIO / BLUETOOTH / USB / SD / BUILT-IN MICROPHONE
- SELECT **FUNCTION SWITCH** TO SELECT DESIRED MODE (RADIO / BLUETOOTH / USB / SD).
- PRESS **RECORD** AND **PLAY BUTTON** TOGETHER, THEN SIGNAL FROM DESIRED MODE WILL BE RECORDED IN TAPE.
- **RECORDING FROM BUILT-IN MICROPHONE**: SELECT **FUNCTION SWITCH** TO TAPE MODE, PRESS **RECORD** AND **PLAY BUTTON** TOGETHER, SPEAK TO BUILT-IN MICROPHONE.

PLAYBACK OF MP3/WMA SONG VIA USB/SD STORAGE MEDIA

CONNECTING
THE SYSTEM IS ABLE TO DECODE AND PLAYBACK ALL MP3 / WMA FILE WHICH STORED IN THE MEMORY MEDIA WITH USB/SD CONNECTING PORT AT THE BACK PANEL.

1. PLUG-IN THE USB OR SD DEVICE WITH THE CORRECT DIRECTION & MAKE SURE IT GOING INTO COMPLETELY, INSERT STRAIGHT WITHOUT BENDING.
2. CONNECTING THE USB/SD DEVCE UPSIDE DOWN OR BACKWARDS COULD DAMAGE THE AUDIO SYSTEM OR THE STORAGE MEDIA. CHECK TO BE SURE THE DIRECTION IS CORRECT BEFORE CONNECTION.
3. SELECT **FUNCTION SWITCH** TO SELECT MUSIC MODE, THEN PLUG IN USB DEVICE OR SD DEVICE:
   - USB PLAYBACK: LED INDICATOR WILL FLASH IN RED COLOR.
   - SD PLAYBACK: LED INDICATOR WILL FLASH IN GREEN COLOR.

- **PLAY / PAUSE BUTTON ▶II**
- PRESS THE **PLAY/PAUSE" ▶II BUTTON** ONCE TO HALT PLAYING, PRESS IT AGAIN TO CONTINUE.

- **SKIP UP ▶▶I / SKIP DOWN I◀◀ BUTTON**
- DURING USB PLAYBACK, PRESS **SKIP UP ▶▶I BUTTON** ONCE TO PLAY THE NEXT FILE. PRESS AND HOLD **SKIP UP ▶▶I BUTTON** CONTINUOUSLY TO SPEED UP SELECTING FORWARD.
- DURING MP3/WMA PLAYBACK, PRESS **SKIP DOWN I◀◀ BUTTON** ONCE TO PLAY THE PREVIOUS FILE. PRESS AND HOLD **SKIP DOWN I◀◀ BUTTON** CONTINUOUSLY TO SPEED UP SELECTING BACKWARD.

- **RECORD BUTTON**
- THE UNIT CAN RECORD RADIO / TAPE / MICROPHONE INTO USB/SD DEVICE.
- ONLY INSERT THE DESIRED RECORDING DEVICE (USD OR SD),
- **RECORDING FROM RADIO:** SELECT FM MODE, PRESS **RECORD** BUTTON, **LED INDICATOR** WILL BE FLASHING RAPIDLY, RECORDING IS IN PROCESS. TO FINISH RECORDING, PRESS RECORD BUTTON AGAIN. SELECT MUSIC MODE TO LISTEN THE PREVIOUS RECORDED TRACK.
- **RECORDING FROM TAPE:** SELECT TAPE MODE, PRESS **RECORD** BUTTON, **LED INDICATOR** WILL BE FLASHING RAPIDLY, RECORDING IS IN PROCESS. TO FINISH RECORDING, PRESS RECORD BUTTON AGAIN. SELECT MUSIC MODE TO LISTEN THE PREVIOUS RECORDED TRACK.
- **RECORDING FROM BUILT-IN MICROPHONE:** SELECT MUSIC MODE, PRESS **RECORD** BUTTON, SPEAK TO BUILT-IN MICROPHONE, **LED INDICATOR** WILL BE FLASHING RAPIDLY, RECORDING IS IN PROCESS. TO FINISH RECORDING, PRESS RECORD BUTTON AGAIN, THE UNIT WILL AUTOMATICALLY PLAY THE PREVIOUS RECORDED TRACK.
- **LED INDICATOR** WILL BE FLASHING IN RED COLOR RAPIDLY DURING RECORDING TO USB.
- **LED INDICATOR** WILL BE FLASHING IN GREEN COLOR RAPIDLY DURING RECORDING TO SD.

- **MODE BUTTON**
- PRESS **MODE BUTTON** TO SWITCH BETWEEN USB, SD AND BLUETOOTH MODE.
- DURING USB/SD PLAYBACK, **PRESS AND HOLD MODE BUTTON**, SINGLE TRACK WILL BE PLAYED REPEATEDLY, **LED INDICATOR** WILL BE FLASHING RAPIDLY.

REMARK
- IF CONNECT THE SYSTEM TO MP3 PLAYER VIA THE USB SOCKET, DUE TO VARIANCES IN MP3 ENCODING FORMAT, SOME MP3 PLAYER MAY NOT BE ABLE TO PLAY VIA THE USB SOCKET. THIS IS NOT A MALFUNCTION OF THE SYSTEM.
- THERE ARE NUMEROUS USB DEVICE PRODUCERS ARE. SOLUTION AND FORMAT ARE VARIABLE BETEEN EACH OTHER. THEREFORE, WE DO NOT GARANTTEE THIS UNIT CAN SUPPORT ALL USB/SD DEVICE FROM EVERY BRAND.

REMOVING OF USB/SD DEVICE
TO REMOVE THE USB/SD DEVICE, SWITCH THE FUNCTION MODE TO OTHER MODE (RADIO OR TAPEO) FIRST, THEN UN-PLUG THE USB/SD DEVICE BY PULLING OUT FROM THE SOCKET DIRECTLY.

BLUETOOTOOTH CONNECTION

- SELECT **FUNCTION SWITCH** TO SELECT BLUETOOTH MODE (PRESS **MODE BUTTON** TO SELECT BLUETOOTH MODE IF USB/SD DEVICE IS PLUGGED IN), **LED INDICATOR** WILL BE FLASHING RAPIDLY IN BLUE COLOR DURING CONNECTING, THEN THE UNIT IS READY FOR CONNECTION WITH YOUR BLUETOOH DEVICE (SUCH AS MOBILE PHONE).
- SWITCH ON THE BLUETOOTH FUNCTION OF YOUR BLUETOOH DEVICE, AND SELECT “BH-T3” BLUETOOTH EQUIPMENT FOR CONNECTION.
- AFTER YOUR BLUETOOH DEVICE IS CONNECTED WITH THE UNIT VIA BLUETOOTH, LED INDICATOR WILL STAY BLUE COLOR, START TO PLAYBACK YOUR DEVICE, OR PRESS **PLAY BUTTON** ON THE UNIT.
- DURING BLUETOOTH PLAYBACK, **LED INDICATOR** WILL BE FLASHING IN BLUE COLOR.

EARPHONE JACK

- THIS SYSTEM CAN BE CONNECTED WITH HEADPHONE OR EXTERNAL AMPLIFIER / SPEAKER BY 3.5MM **EARPHONE JACK**.

This device complies with part 15 of the FCC Rules. Operation is subject to the following two conditions: (1) this device may not cause harmful interference, and (2) this device must accept any interference received, including interference that may cause undesired operation.
Any changes or modifications not expressly approved by the party responsible for compliance could void the user's authority to operate the equipment.
NOTE: This equipment has been tested and found to comply with the limits for a Class B digital device, pursuant to Part 15 of the FCC Rules. These limits are designed to provide reasonable protection against harmful interference in a residential installation. This equipment generates, uses and can radiate radio frequency energy and, if not installed and used in accordance with the instructions, may cause harmful interference to radio communications. However, there is no guarantee that interference will not occur in a particular installation.
If this equipment does cause harmful interference to radio or television reception,
which can be determined by turning the equipment off and on, the user is encouraged to try to correct the interference by one or more of the following measures:
-- Reorient or relocate the receiving antenna.
-- Increase the separation between the equipment and receiver.
-- Connect the equipment into an outlet on a circuit different from that to which the receiver is connected.
-- Consult the dealer or an experienced radio/TV technician for help.
The device has been evaluated to meet general RF exposure requirement. The device can be used in portable exposure condition without restriction