Model : LP-45B

User manual – Turntable with Bluetooth transmission

CAUTION:
Usage of controls or adjustments or performance of procedures other than those specified herein may result in hazardous radiation exposure.

PRECAUTIONS BEFORE USE

KEEP THESE INSTRUCTIONS IN MIND:

1. Do not cover or block any ventilation openings. When placing the device on a shelf, leave 5 cm (2”) free space around the whole device.
2. Install in accordance with the supplied user manual.
3. Keep the device away from heat sources such as radiators, heaters, stoves, candles and other heat-generating products or naked flame. The device can only be used in moderate climates. Extremely cold or warm environments should be avoided. Working temperature between 0° and 35°C.
4. Avoid using the device near strong magnetic fields.
5. Electrostatic discharge can disturb normal usage of this device. If so, simply reset and restart the device following the instruction manual. During file transmission, please handle with care and operate in a static-free environment.
6. Warning! Never insert an object into the product through the vents or openings. High voltage flows through the product and inserting an object can cause electric shock and/or short circuit internal parts. For the same reason, do not spill water or liquid on the product.
7. Do not use in wet or moist areas such as bathrooms, steamy kitchens or near swimming pools.
8. The device shall not be exposed to dripping or splashing and make sure that no objects filled with liquids, such as vases, are placed on or near the apparatus.
9. Do not use this device when condensation may occur. When the unit is used in a warm wet room with damp, water droplets or condensation may occur inside the unit and the unit may not function properly; let the unit stand in power OFF for 1 or 2 hours before turning on the power: the unit should be dry before getting any power.
10. Although this device is manufactured with the utmost care and checked several times before leaving the factory, it is still possible that problems may occur, as with all electrical appliances. If you notice smoke, an excessive build-up of heat or any other unexpected phenomena, you should disconnect the plug from the main power socket immediately.
11. This device must operate on a power source as specified on the specification label. If you are not sure of the type of power supply used in your home, consult your dealer or local power company.
12. Keep away from animals. Some animals enjoy biting on power cords.
13. To clean the device, use a soft dry cloth. Do not use solvents or petrol based fluids.
    To remove severe stains, you may use a damp cloth with dilute detergent.
14. The supplier is not responsible for damage or lost data caused by malfunction, misuse, modification of the device or battery replacement.
15. Do not interrupt the connection when the device is formatting or transferring files. Otherwise, data may be corrupted or lost.
16. If the unit has USB playback function, the USB memory stick should be plugged into the unit directly. Don’t use an USB extension cable because it can cause interference resulting in failing of data.
17. The rating label has been marked on the bottom or back panel of the device.
18. This device is not intended for use by people (including children) with physical, sensory or mental disabilities, or a lack of experience and knowledge, unless they’re under supervision or have received instructions about the correct use of the device by the person who is responsible for their safety.
19. This product is intended for non professional use only and not for commercial or industrial use.
20. Make sure the unit is adjusted to a stable position. Damage caused by using this product in an unstable position vibrations or shocks or by failure to follow any other warning or precaution contained within this user manual will not be covered by warranty.
21. Never remove the casing of this device.
22. Never place this device on other electrical equipment.
23. Do not allow children access to plastic bags.
24. Only use attachments/accessories specified by the manufacturer.

25. Refer all servicing to qualified service personnel. Servicing is required when the device has been damaged in any way, such as the power supply cord or the plug, when liquid has been spilled or objects have fallen into the device, when the device has been exposed to rain or moisture, does not operate normally, or has been dropped.
26. Long exposure to loud sounds from personal music players may lead to temporary or permanent hearing loss.
27. If the product is delivered with power cable or AC power adaptor:
    - If any trouble occur, disconnect the AC power cord and refer servicing to qualified personnel.
    - Don't step on or pinch the power adaptor. Be very careful, particularly near the plugs and the cable's exit point. Do not place heavy items on the power adaptor, which may damage it. Keep the entire device out of children's reach! When playing with the power cable, they can seriously injure themselves.
    - Unplug this device during lightning storms or when unused for a long period.
    - The socket outlet must be installed near the equipment and must be easily accessible.
    - Do not overload ac outlets or extension cords. Overloading can cause fire or electric shock.
    - Devices with class 1 construction should be connected to a main socket outlet with a protective earthed connection.
    - Devices with class 2 construction do not require a earthed connection.
    - Always hold the plug when pulling it out of the main supply socket. Do not pull the power cord. This can cause a short circuit.
    - Do not use a damaged power cord or plug or a loose outlet. Doing so may result in fire or electric shock.
28. If the product contains or is delivered with a remote control containing coin/cell batteries:
    Warning:
    - "Do not ingest battery, Chemical Burn Hazard" or equivalent working.
    - [The remote control supplied with] This product contains a coin/button cell battery. If the battery is swallowed, it can cause severe internal burns in just 2 hours and can lead to death.
    - Keep new and used batteries away from children.
    - If the battery compartment does not close securely, stop using the product and keep it away from children.
    - If you think batteries might have been swallowed or placed inside any part of the body, seek immediate medical attention.
29. Caution about the use of Batteries:
    - Danger of explosion if battery is incorrectly replaced. Replace only with the same or equivalent type.
    - Battery cannot be subjected to high or low extreme temperatures, low air pressure at high altitude during use, storage or transportation.
    - Replacement of a battery with an incorrect type that can result in an explosion or the leakage of flammable liquid or gas.
    - Disposal of a battery into fire or a hot oven, or mechanically crushing or cutting of a battery, that can result in an explosion.
    - Leaving a battery in an extremely high temperature surrounding environment that can result in an explosion or that leakage of flammable liquid or gas.
    - A battery subjected to extremely low air pressure that may result in an explosion or the leakage of flammable liquid or gas.
    - Attention should be drawn to the environmental aspects of battery disposal.

INSTALLATION

- Unpack all parts and remove protective material.
- Do not connect the unit to the mains before checking the mains voltage and before all other connections have been made.

Deliver Content

1 x Manual

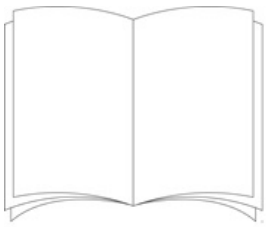

1 x Power Adaptor + 1 x CE plug

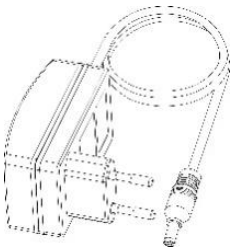

1 x RCA connection cable

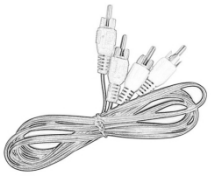

1 x Platter

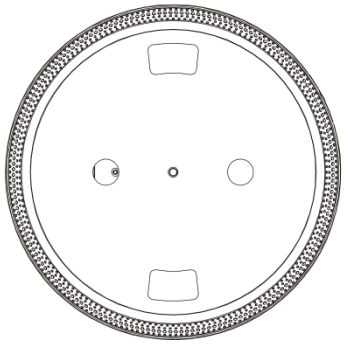

1x Felt Mat

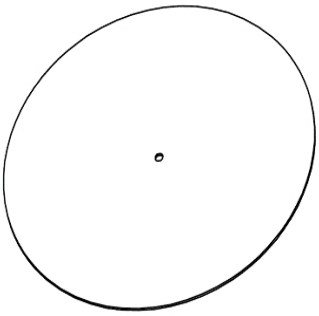

PRODUCT FEATURES

- 33/45 RPM SELECTABLE TURNTABLE
- BELT DRIVEN SYSTEM
- AUTO-RETURN TONE ARM
- LIFT LEVER
- BLUETOOTH TRANMITTER
- RCA LINE-OUT
- DETTACHABLE HEADSHELL
- PITCH CONTROL
- ACCESSORIES INCLUDED:
    1. TURNTABLE PLATTER
    2. SLIP MAT
    3. DUST COVER
    4. 45 RPM ADAPTOR
    5. WEIGHT COUNTER
    6. AUDIO TECHNICA CARTRIDGE AT-3600L
    7. RCA CABLE
    8. OPERATION MANUAL
    9. EXTERNAL POWER ADAPTOR

LOCATION OF CONTROL

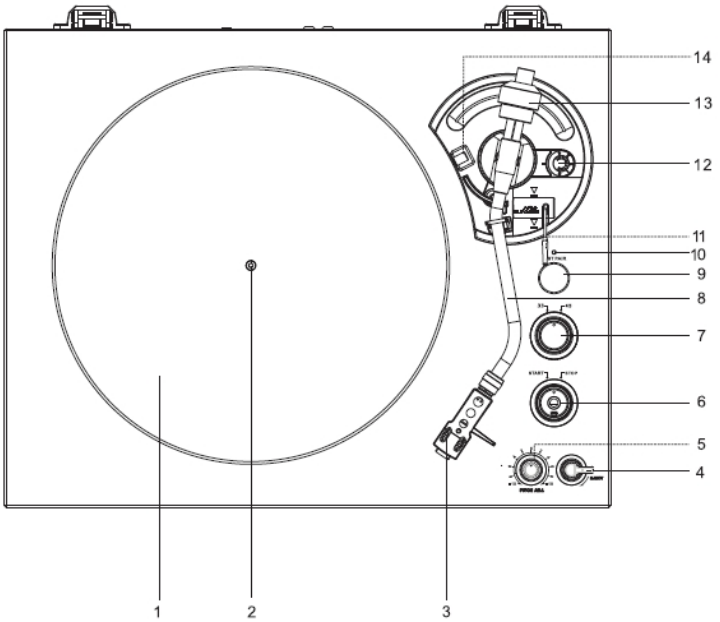

1) TURNTABLE PLATTER
2) CENTER SPINDLE
3) HEADSHELL
4) RETURN SWITCH
5) PITCH CONTROL KNOB
6) PLAY/STOP SWITCH
7) 33RPM / 45RPM SPEED SELECTOR
8) TONE ARM
9) BT PAIRING BUTTON
10) BT PAIRING INDICATOR
11) LIFT LEVER
12) ANTI SKATE KNOB
13) WEIGHT COUNTER
14) STROBE LIGHT
15) PHONO / LINE SELECTOR
16) RCA LINE-OUT SOCKET
17) EXTERNAL POWER ADATOR JACK
18) ON/STANDBY BUTTON
19) GROUND TERMIAL

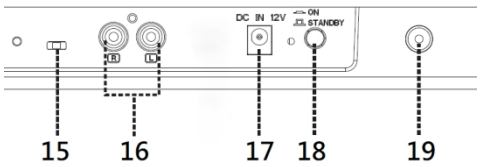

CAUTION:

USAGE OF CONTROLS OR ADJUSTMENTS OR PERFORMANCE OF PROCEDURES OTHER THAN THOSE SPECIFIED HEREIN MAY RESULT IN HAZARDOUS RADIATION EXPOSURE.

THIS UNIT SHOULD NOT BE ADJUSTED OR REPAIRED BY ANYONE EXCEPT QUALIFIED SERVICE PERSONNEL.

WARNING:

- THE APPARATUS SHALL NOT BE EXPOSED TO DRIPPING OR SPLASHING AND THAT NO OBJECTS FILLED WITH LIQUIDS, SUCH AS VASES, SHALL BE PLACED ON THE APPARATUS.
- THE MAINS PLUGS OR AN APPLIANCE COUPLER IS USED AS THE DISCONNECT DEVICE, AND THE DISCONNECT DEVICE SHALL REMAIN READILY OPERABLE.

PRECAUTIONS FOR USE

INSTALLATION

- UNPACK ALL PARTS AND REMOVE PROTECTIVE MATERIAL.
- DO NOT CONNECT THE UNIT TO THE MAINS BEFORE CHECKING THE MAINS VOLTAGE AND BEFORE ALL OTHER CONNECTIONS HAVE BEEN MADE.
- DO NOT COVER ANY VENTS AND MAKE SURE THAT THERE IS A SPACE OF SEVERAL CENTIMETERS AROUND THE UNIT FOR VENTILATION.

CONNECTION

1. CONNECT THE EXTERNAL POWER ADAPTOR WITH **EXTERNAL POWER ADAPTOR SOCKET.**
2. PLUG THE EXTERNAL POWER ADAPTOR INTO A SUITABLE MAINS SOCKET
3. PUSH IN THE **ON/STANDBY BUTTON** ON THE BACK PANELTO SWTICH ON THE UNIT FROM STANDBY MODE.

OPERATION

- INSTALL THE DUST COVER INTO HINGE ON THE UPPER CABINET.

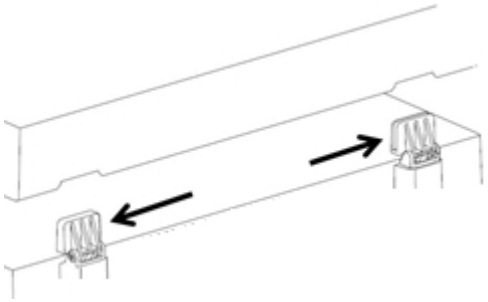

- SET THE TURNTABLE PLATTER ONTO THE CENTER SPINDLE.
- ATTACH THE DRIVE BELT: POSITION THE BELT ON THE MOTOR PULLY, THE DRIVE BELT IS TIGHTENED UNDER THE TURNTABLE PLATTER.

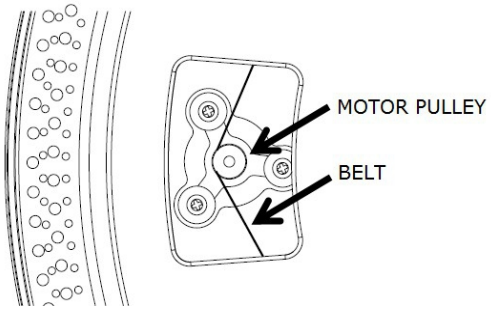

- PLACE THE SLIP MAT ON THE TURNTABLE PLATTER.
- INSERT THE **HEADSHLL** INTO THE FRONT END OF THE TONEARM, THEN SCREW THE LOCK NUT WITH THE **HEADSHELL** FIRMLY HELD HORIZONTALLY.

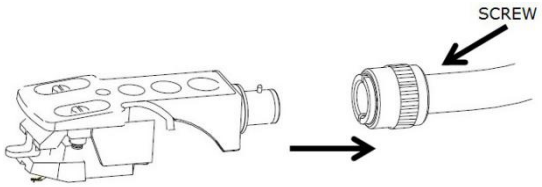

INSTALL THE COUNTERWEIGHT

- SLIDE **COUNTERWEIGHT** ONTO THE TONEARM. TWIST IT LIGHTLY AND IT WILL SCREW INWARDS ONTO THE REAR END OF THE **TONEARM**. EVERY FULL TURN OF THE SCALE RING REPRESENTS AROUND 2.4 GRAM (+/-0.4 GRAM).

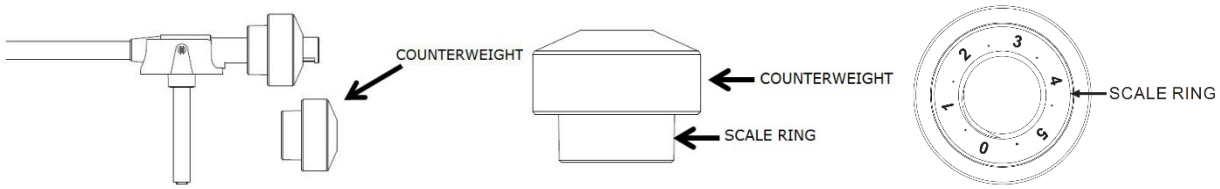

- FOR THE DEFAULT AUDIO-TECHNICA AT-3600L CARTRIDGE, TURN THE COUNTERWEIGHT INWARDS UP TO THE HORIZONTAL LINE ON THE REAR END OF THE **TONEARM**.

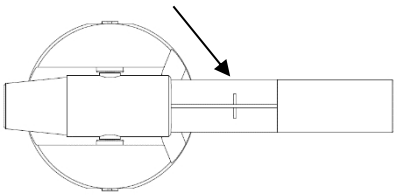

- HOLD THE **COUNTER WEIGHT** WITH ONE HAND, TURN SCALE RING TO “3” AGAINST THE INDEX LINE ON THE SHAFT YOUR ANOTHER HAND AND MAKE SURE NOT TO TURN THE COUNTER WEIGHT, ONLY TURN THE SCALE RING! THE TRACKING FORCE WILL BE AROUND 3.0 GRAM (+/-0.4 GRAM).

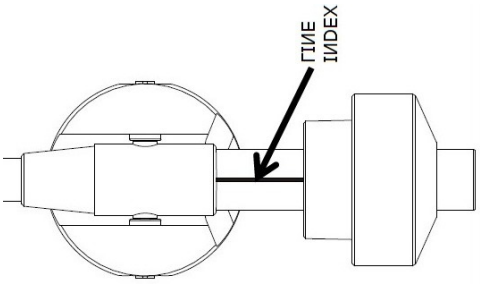

- IF NECESSARY, TURNING THE **COUNTER WEIGHT** INWARDS INCREASES THE TRACKING FORCE, WHILE TURNING THE **COUNTER WEIGHT** BACKWARDS DECREASES THE TRACKING FORCE.
- FOR OTHER CARTRIDGES, YOU CAN ADJUST THE TRACKING FORCE BY TURNING COUNTERWEIGHT INWARDS OR BACKWARDS. EACH NUMBER ON THE SCALE RING CORRESPONDS TO AROUND 0.4GRAM OF TRACKING FORCE.

ANTI-SKATING ADJUSTMENT

THE ANTI-SKATE ADJUSTMENT PREVENTS THE TONEARM ASSEMBLY FROM SKIPPING ACROSS THE

RECORD FROM THE CENTRIFUGAL FORCE THAT IS CAUSED SPINNING ROTATION OF THE PLATTER. THE ANTI-SKATING CONTROL KNOB SHOULD BE SET TO THE SAME VALUE AS THE STYLUS PRESSURE. FOR EXAMPLE IF YOUR COUNTERWEIGHT IS SET TO 3 GRAMS THE ANTI-SKATE VALUE SHOULD ALSO BE SET TO 3.

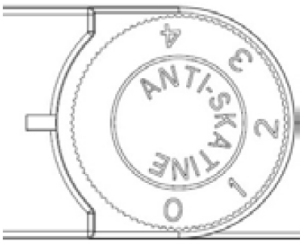

PICKUP SELECTOR

- **LINE / PHONO SELECTOR** IS LOCATED AT THE BACK PANEL.
- SELECT "**PHONO**", AUDIO SIGNAL WILL BY PASS INTERNAL PRE-AMPLIFIER WITHOUT ANY PROCESSOR. THEN TURNTABLE HAS TO BE CONNECTED WITH EXTERNAL PRE-AMPLIFIER OR PHONO CONNECTOR OF AN AMPLIFIER IF AVAILABLE FOR MUSIC PLAYBACK.
- SELECT "**LINE**", AUDIO SIGNAL WILL BE PROCESSED BY INTERNAL PRE-AMPLIFIER. TURNTABLE CAN BE DIRECTLY CONNECTED WITH AN ACTIVE SPEAKER OR LINE IN CONNECTOR OF AN AMPLIFIER FOR MUSIC PLAYBACK.

- REMOVE THE STYLUS PROTECTOR.
- BE SURE THAT THE TONE ARM IS BEING DETACHED FROM THE TONE ARM REST PART BEFORE OPERATING AND RE-SECURED AGAIN AFTERWARDS.
- PUSH THE **LIFT LEVER** UPWARD TO RAISE THE TONE ARM FROM THE ARM PARK, AND THEN SLOWLY MOVE IT TO THE RECORD SIDE. THE PLATTER WILL START TO ROTATE.
- PUT DOWN THE **LIFT LEVER** TO DROP THE TONE ARM AND TOUCH THE RECORD GENTLY. PHONO PLAYING STARTS NOW.
- PUSH THE **LIFT LEVER** UPWARD TO RAISE THE TONE ARM FROM THE ARM PARK, NOW PLATTER WILL STILL BE ROTATING BUT PHONO PLAYING WILL STOP. TO CONTINUE THE PLAYING, THE USER NEEDS TO PUT DOWN THE **LIFT LEVER**.
- TURN SPEED SELECTOR TO 33RPM OR 45RPM, DEPENDING ON THE RECORD TO BE PLAYED.
- TURN **START / STOP SWTICH** TO STOP TURNTABLE FROM ROTATING OR RESUME TO WORK.
- **STROB DOTS** ON THE TURNTABLE PLATTER FOR SPEED CHECKING. UPPER ROWS OF BIGGER DOTS FOR 33RPM, UPPER ROWS OF SMALLER DOTS FOR 45RPM. ADJUST SPEED BY **PITCH CONTROL SLIDER (+/-10%)** IF NECESSARY. SUITABLE DOTS WILL KEEP STABLIZED UNDER **STROB LIGHT** IF THE SPEED IS CORRECT.

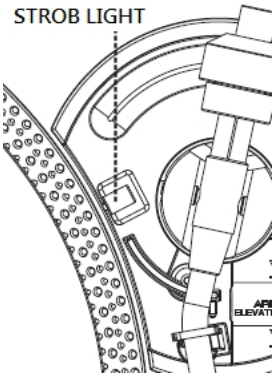

- USE THE 45 RPM ADAPTOR IF REQUIRED.
- AT THE END OF RECORD, THE PLATTER WILL AUTOMATICALLY STOP ROTATING, TONE ARM WILL AUTOMATICALLY RETURN TO THE TONE ARM REST PART.
- TRIGGER THE **RETURN SWITCH** DURING RECORD PLAYING, TURNTABLE WILL STOP GENTLY AND TONE ARM WILL UTOMATICALLY RETURN TO THE TONE ARM REST PART.
- SINCE THERE ARE NUMEROUS VINYL MAUFACTURERS, WE DO NOT GUARANTEE AUTO RETURN FUNCTION IS APPLICABLE ON ALL VINYL. IF THE TONEARM CANNOT RETURN AUTOMATICALLY, PLEASE TRIGGER THE **RETURN SWITCH** TO ACTIVATE AUTO RETURN

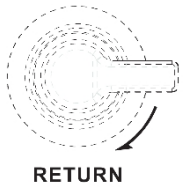

LINE OUT SOCKET & GROUND TERMINAL

- THIS SYSTEM CAN BE CONNECTED WITH EXTERNAL DEVICE (EG. AMPLIFIER AND ACTIVE SPEAKER) BY **RCA LINE-OUT SOCKETS** AT REAR CABINET.

THERE IS **GROUND TERMINAL** AT THE BACK PANEL OF THE TURNTABLE. END-USER CAN CONNECT IT WITH THE GROUND TERMINAL OF THE EXTERNAL AMPLIFIER OR PREAMPLIFIER WITH GND CABLE (NOT INCLUDED) IF NECESSARY.

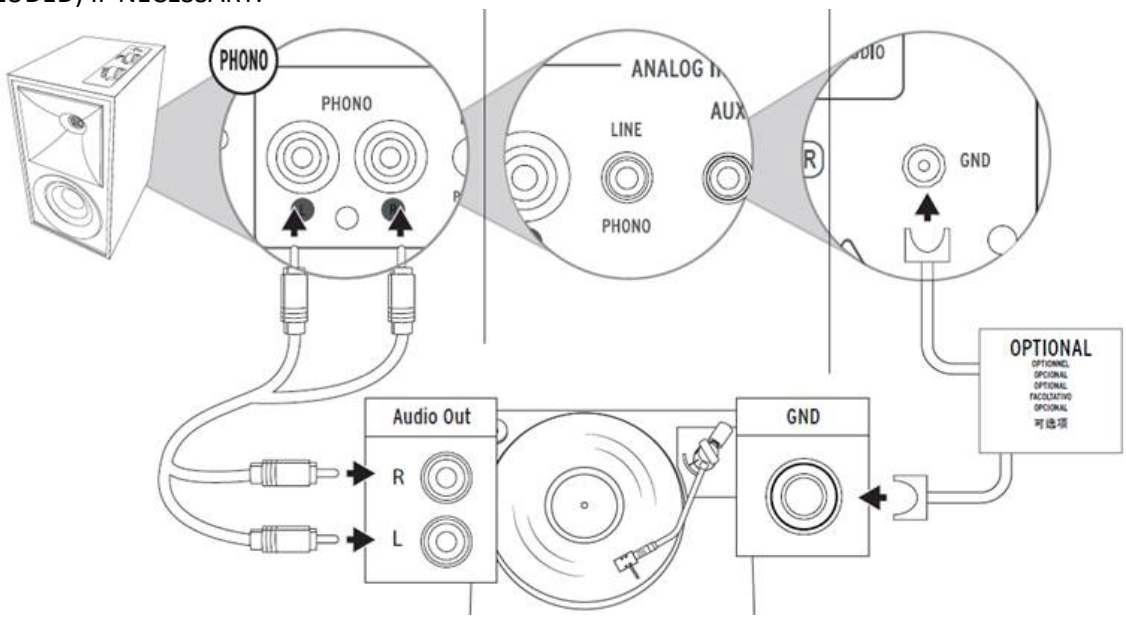

BLUETOOTH TRANSMITTER

- THIS SYSTEM CAN BE CONNECTED WITH EXTERNAL BLUETOOTH SPEAKER FOR WIRELESS MUSIC PLAYBACK.
- SWITCH TO **LINE SELECTOR** AT THE BACK PANEL.
- PRESS **BT PAIRING BUTTON** TO CONTROL THE BLUETOOTH TRANSMITTER FUNCTION:
  - **BT PAIRING INDICATOR FLASHING:** READY TO CONNECT WITH EXTERNAL BLUETOOTH SPEAKER.
  - **BT PAIRING INDICATOR STAY ON:** ALREADY CONNECTED WITH EXTERNAL BLUETOOTH SPEAKER.
  - **BT PAIRING INDICATOR OFF:** DISCONNECTED WITH EXTERNAL BLUETOOTH SPEAKER.
- SINCE THERE ARE NUMEROUS BLUETOOTH SOLUTION, WE DO NOT GUARANTEE THAT THIS TURNTABLE CAN SUPPORT ALL BLUETOOTH SPEAKER FROM EVERY MANUFACTURERS. IN CASE THERE IS ANY EXTERNAL BLUETOOTH SPEAKER CANNOT BE CONNECTED, PLEASE TRY ANOTHER BLUETOOTH SPEAKER AGAIN. OR CONNECT THIS TURNTABLE WITH WIRED SPEAKER FOR MUSIC PLAYBACK.

POWER SAVING FEATURE

- TO SAVE ENERGY, IF THERE IS NO AUDIO SIGNAL FROM TURNTABLE FOR A PERIOD OF OVER AROUND 10 MINUTUES, THE POWER FOR THE UNIT WILL BE CUT. TO ACTIVATE THE UNIT AGAIN, PRESS THE **ON/STANDBY BUTTON** ON THE BACK PANEL TO SWTICH OFF THE UNIT. AFTER 10 SECONDS, PRESS THE **ON/STANDBY BUTTON** AGAIN TO SWITCH ON THE UNIT.

Specification

General

Model:	LP-45B
Dimensions:	450(W) x 355(D) x 130(H)mm
Weight:	4.5Kg
Power supply:	AC ADAPTER 100V-240V 50/60Hz 0.65A
Power consumption:	3W
Standard test condition:	Ambient Temperature: 20 +/- 2 deg.C
Relative Humidity:	65% +/- 5%

NOTE: Measurements can be carried out between 5 deg.C to 35 deg.C and 45% to 85% relative humidity.

Turntable Section:

Type:	2-speed full manual
Motor:	Miniature permanent magnet DC brushes
Driving Method:	Belt drive
Turntable Platter:	332mm (Aluminum)
Speeds:	33 and 45rpm
Wow and Flutter:	Less than 0.3% WRMS (JIS WTD) with 33 rpm
S/N Ratio:	More than 50dB (DIN-B)
Pitch Controls:	+/- 10%
Starting Torque:	N/A
Braking System:	Electronic brake

Starting Time:	Less than 2 sec.
Braking Time:	Less than 2 sec.
Time for Speed Change:	Less than 2 sec. from 33 to 45 rpm.
	Less than 2 sec. from 33 to 45 rpm.

Tonearm section:

Type:	Static balanced S-shaped tone arm
Effective Arm Length:	200mm
Overhang:	10mm
Tracking Error Angle:	Less than 3 degree
Tracking Force Adjustment Range:	3-4g
Cartridge MM Type:	Audio Technica AT-3600L
Stylus pressure:	3.5±0.5g
Cartridge weight:	2.5±0.5g
Anti-skating Range:	0~4g
Channel Separation:	More than 18 dB
Channel Balance:	Within 2.5dB at 1KHz

Pre-Amplifier

Output:	150mV +/-4dB (IN: 2.5mV 1KHz)
RIAA (Frequency Response):	20Hz~20KHz +1/-3dB (IN: 1.5mV 1KHz)

This device complies with part 15 of the FCC Rules. Operation is subject to the following two conditions: (1) this device may not cause harmful interference, and (2) this device must accept any interference received, including interference that may cause undesired operation.
Any changes or modifications not expressly approved by the party responsible for compliance could void the user's authority to operate the equipment.
NOTE: This equipment has been tested and found to comply with the limits for a Class B digital device, pursuant to Part 15 of the FCC Rules. These limits are designed to provide reasonable protection against harmful interference in a residential installation. This equipment generates, uses and can radiate radio frequency energy and, if not installed and used in accordance with the instructions, may cause harmful interference to radio communications. However, there is no guarantee that interference will not occur in a particular installation.
If this equipment does cause harmful interference to radio or television reception,
which can be determined by turning the equipment off and on, the user is encouraged to try to correct the interference by one or more of the following measures:
-- Reorient or relocate the receiving antenna.
-- Increase the separation between the equipment and receiver.
-- Connect the equipment into an outlet on a circuit different from that to which the receiver is connected.
-- Consult the dealer or an experienced radio/TV technician for help.
The device has been evaluated to meet general RF exposure requirement. The device can be used in portable exposure condition without restriction