NORAV medical

*ECG Excellence*

# NR SERIES

## INSTRUCTIONS FOR USE

**VERSION: 3.3**

**DATE: 28.10.2024**

www.norav.com info@norav.com

Copyright © Norav, 2024
No part of this publication may be reproduced in any material form (including photocopying or storing it in any medium by electronic means whether or not transiently or incidentally to some other use of this publication) without the prior written permission of the copyright owner, or under the terms of a license issued by the copyright owner.

The information contained in this document is subject to change without notice. Norav is neither responsible for nor liable to anyone in connection with this document.

## Manufacturer and Contact Information

**Manufactured by:**

Norav Medical Inc.

601 N. Congress Ave, Suite 105

Delray Beach FL 33445

USA

Tel: (+1) 561-274-4242

E-mail: info@norav.com

**Caution**

**Federal Law restricts this device to sale by or on the order of a licensed physician or healthcare provider**

## Disclaimer

This system is intended as a decision support system for persons who have received appropriate medical training, and should not be used as a sole basis for making clinical decisions pertaining to patient diagnosis, care, or management. Any application of medical information from the program, other than the original design or intended use thereof, is not advised and considered a misuse of the software product.

## Norav Limited Warranty

Norav products are warranted to be free from manufacturing and material defects for a period of one (1) year from the date of shipment from Norav or the dealer to the original purchaser.

Excluded from this warranty are expendable supply items including, but not limited to, electrodes, lead wires, patient cables, and batteries. This warranty does not apply to any product that Norav determines that it has been modified or damaged by the customer.

Except for the express warranties stated above, Norav disclaims all warranties including implied warranties of merchantability and fitness. The stated express warranties are in lieu of all obligations or liabilities on the part of Norav for damages, including but not limited to, special, indirect, or consequential, arising out of or in connection with the use or performance of Norav products.

Any action for breach of warranty shall be commenced within one (1) year of said breach or be forever barred. Any repairs made to the product that are not covered by the warranty shall be billed to the customer.

For service or technical support contact your local supplier or Norav Medical.

# Contents

Disclaimer ..... 2
Norav Limited Warranty ..... 2
Symbols and Notations Used in this Manual ..... 4
Device Label Symbols ..... 5
General Description ..... 6
NR Feature Matrix ..... 6
Intended Use ..... 6
Indications for Use ..... 6
Contraindications and Potential Adverse Effects ..... 6
Warnings and Precautions ..... 7
Device Controls and Indicators ..... 9
Memory Card Usage (SD card) ..... 12
Main Battery ..... 13
RTC Back up Battery ..... 13
Electrode Application Guide ..... 14
Electrode Placement Scheme ..... 15
Patient Cable Connection ..... 16
Screen Navigation ..... 17
Common Modes and Workflows ..... 20
ECG Recording Procedure: Detailed Instructions ..... 21
Maintenance and Cleaning ..... 25
Storage ..... 27
Service ..... 27
Calibration ..... 27
Troubleshooting ..... 28
Technical Specifications ..... 29
ECG Cables and Accessories ..... 31
Electromagnetic Emissions and Immunity Information ..... 32
FCC Information ..... 36
Document History ..... 37

# Symbols and Notations Used in this Manual

| | |
|---|---|
| **WARNING** | Warnings call attention to possible hazards involving potential damage or injury to persons. |
| **Caution** | Cautions refer to practices necessary to protect against potential damage or loss to equipment. Pay careful attention to instructions. |
| **Note** | Notes provide pertinent information to help obtain optimum performance from the software or signify an important step or procedure that requires special attention. |

# Device Label Symbols

| Symbol | Description |
|---|---|
| | Applied part type BF |
| | Defibrillator-proof type CF applied part |
| | Defibrillation protection in patient cable |
| | Caution |
| | Refer to operation manual<br>NOTE On ME EQUIPMENT "Follow instructions for use” |
| IP22 IP64 | IP protection class |
| SN | Device Serial Number |
| REF | Device Reference Number |
| | Manufacturer |
| | Date of manufacture |
| 1x(1.2V-1.5V) Size AA | Use AA (R6) batteries. |
| Contains FCC ID | Contains FCC certified Bluetooth module |
| | Disposal of the device in accordance with the EU Directive 2002/96/EC (WEEE). Device containing an internal lithium battery that may be recycled at end of life. This device and all other accessories should be disposed of according to local ordinances. |
| IEC-R6 AA + | Indicates the proper orientation of battery to be installed |
| Rx only | **By prescription only.** U.S. Federal Law restricts this device to sale on order of a physician only. |
| | Contains MIC certified Bluetooth module |
| | Contains RCM certified Bluetooth module |
| UDI | Unique Device Identification (UDI) information |
| MD | Medical device |
| # | Model Number |

# General Description

The NR series (here and later "NR") is a digital device which allowing acquisition of ECG waveforms with further recording and/or transmitting the data to the external computer system.

# NR Feature Matrix

The following table is showing the available features depending on the device model.

| Model | ECG channels | Patient cable Leads | Pacemaker detection | Acceleration sensor | Respiration signal | Voice recording | Bluetooth communication | USB communication | Ambulatory (Holter recording) | Rest ing ECG | Stress ECG | Telemetry ECG | Ambulatory Event recording |
|---|---|---|---|---|---|---|---|---|---|---|---|---|---|
| **NR-302** | 3 | 3, 5, 7 | **yes** | no | no | no | no | **yes** | **yes** | no | no | no | no |
| **NR-314** | 3 | 3, 5, 7 | **yes** | **yes** | **yes** | **yes** | **yes** | **yes** | **yes** | no | no | no | **yes** |
| **NR-314-T** | 6 | 4, 5 | **yes** | no | no | no | **yes** | no | no | no | no | **yes** | no |
| **NR-1207** | 3, 12 | 3, 5, 7, 10 | **yes** | **yes** | **yes** | **yes** | **yes** | **yes** | **yes** | no | no | no | **yes** |
| **NR-1207-3** | 3, 6, 12 | 3, 4, 5, 7, 10 | **yes** | **yes** | **yes** | **yes** | **yes** | **yes** | **yes** | **yes** | **yes** | **yes** | **yes** |
| **NR-1207-E** | 6,12 | 4, 5, 10 | **yes** | no | no | no | **yes** | no | no | **yes** | **yes** | no | no |
| **NR-314-P** | 3 | 3, 4, 5 | **yes** | **yes** | no | no | **yes** | **yes** | **yes** | no | no | **yes** | **yes** |

# Intended Use

Intended for patients requiring:

- Ambulatory Holter ECG
- Ambulatory Event ECG
- Use within the physician office setting by the medical professional
  - Resting ECG
  - Stress ECG
  - Telemetry ECG

# Indications for Use

The NR device is indicated for use on patients who may be asymptomatic or who may suffer from transient symptoms such as palpitations, shortness of breath dizziness, light headedness, pre-syncope, syncope, fatigue, chest pain, anxiety, suggesting arrhythmia or myocardial ischemia; for evaluation of ECG documenting therapeutic interventions in individual patients or groups of patients; for evaluation of patients for ST segment changes; for evaluation of a patient's response after resuming occupational or recreational activities (for example, after myocardial infarction or cardiac surgery); for clinical and epidemiological research studies; for evaluation of patients with pacemakers; for reporting of QT interval; etc.
The NR device has been designed for use by medical clinical professionals. The medical clinical professionals must instruct the patient in the correct use and it is important the patient can understand the instructions given by medical clinical professionals.

# Contraindications and Potential Adverse Effects

There are no known contraindications or adverse effects for using NR equipment.

# Warnings and Precautions

**WARNING**

- Models NR-314-T, NR-1207-E and NR-1207-3 are protected against the defibrillator, when a defibrillation protected patient cable is used. (see table: “ECG Cables and Accessories” with part numbers).
  To avoid the possibility of injury/hazardous situations during cardiac defibrillator use, a protected against the defibrillator cables must be used.
  To avoid the possibility of injury during patient defibrillation, do not come into contact with device or patient cables. Additionally, proper placement of defibrillator paddles in relation to the electrodes is required to minimize harm to the patient.
- Models NR-314, NR-302, NR-1207 and NR-314-P are NOT protected against the defibrillator. When using the defibrillator, remove NR device from the patients.
- The NR device is not intended for use on infants weighing less than 10 kilograms (22 pounds).
- The NR device is not protected against the high-frequency surgical apparatus. When using the high-frequency surgical apparatus, remove NR device from the patient.
- NR device is not directly applicable to the heart.
- Do not use the NR device in an area where using combustible or flammable gas or liquid such as anesthetic, oxygen, or hydrogen.
- The power supply of NR device and patient circuit are not distinctly isolated. Only use batteries that are specified for the operation. Do not, under any circumstances, use a non-battery external power supply- this could threaten the patient's life.
- Any attempt to use NR device in an area where MRI is operating will mutually generate negative effects.
- Make sure that the electrode plug (patient side) never comes into contact with live parts. Do not operate the NR device near exposed live parts.
- Store the NR device safely away from children.
- Before each recording and before attaching sensors or electrodes to the patient, check the casing and the ECG patient cable for damage which may have occurred, for example, due to mechanical overload, falling from a great height or wear and tear (chafed patches on the cable). Do not use the instrument or the cable if you detect cracks, melted areas or any other signs of damage to the cable or housing.
- Do not connect NR device other than the specified equipment for your safety and optimal performance.
- Avoid touching the snap terminals and leadwires of NR device to other conductive parts or earth, as this may damage the NR device

**Caution**

- Store the NR device in an area free from water or humidity
- Take care to avoid areas subject to high humidity, poor ventilation and direct sunlight; store the NR device in an area free from any adverse effects of surrounding air containing dust, sodium, and sulfur.
- Do not store the NR device in an area where chemicals are kept, or which is exposed to chemical fumes or vapors.
- Never attempt to modify or to disassemble the NR device.
- Do not open the case except for by our service person.
- Check that electrodes are correctly and completely installed.
- When using NR device in combination with any other equipment, refer to a qualified service technician for correct handling.

**Caution**

- When changing the batteries (all but NR-314-P models), make sure you insert them correctly (polarity). The polarity is indicated in the battery compartment.
- Do not leave the batteries in the NR device (all but NR-314-P models) when it is not in use. Damage to the NR device could result from corrosion of the batteries.
- Even though that the NR device is protected against ingress of liquids, during a recording prevent it from being exposed to liquids. The NR device is not suitable for use in the bath tub or shower.
- During recording, make sure that the cable lead wires are not caught by the moving parts of a machine or sport equipment. This could lead to damage or injury (e.g. if loops are formed in the cable lead wires).
- Take care to prevent chemicals\liquids from entering the connectors or internal part of the NR device.
- Any attempt to use cleaner containing organic solvent, thinner, toluene, or benzene for cleaning of the NR device will generate the damage of the housing.
- When cleaning NR device, wipe with a cloth soaked with regular household cleaner diluted with water.
- Do not polish the housing with abrasive or chemical cleanser.
- For all but NR-314-P models: do not, under any circumstances, insert objects in the ECG Connector slot, SD card slot or the battery compartment other than NR ECG Cable connector, SD memory cards or appropriate batteries. This may lead to damages to the NR device and endanger the patient.

**Note**

- For all but NR-314-P models: use only a Norav Certified SD card for Recording.
- It is the end user's responsibility to properly configure the NR device with settings that are compatible with their ECG analysis software.
- False positive and false negative pacer detects may occur when using Pacer Detect.
  False positives - may result from poor electrode connection to the patient or a large amount of electrical interference from nearby objects.
  False negatives - may occur with pacers that are bipolar because of a weak pacer pulse signal at the patient's skin.
- The NR device is not designed for emergency purposes (intensive medical). It is only designed to record the ECG and/or heart rate.

# Device Controls and Indicators

## Models: NR-302, NR-314, NR-314-T, NR-1207, NR-1207-3 and NR-1207-E

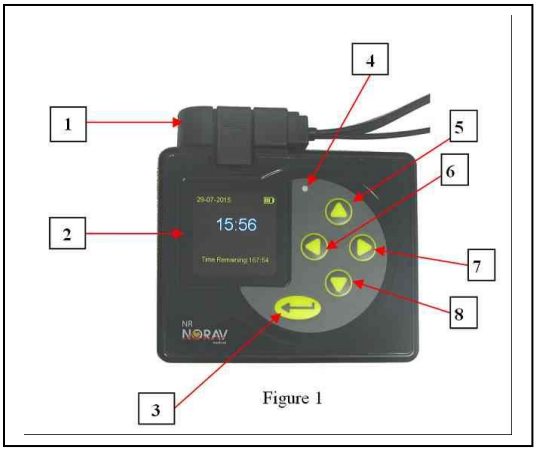

Figure 1

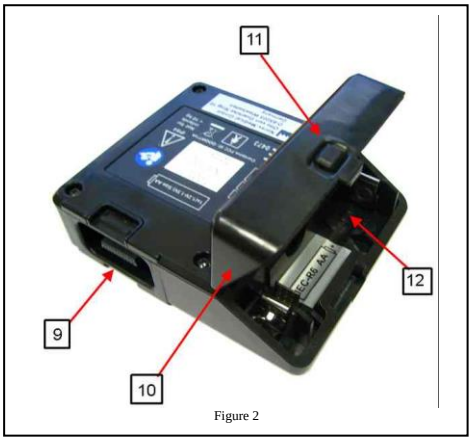

Figure 2

| Element | Description |
|---|---|
| 1 | Patient ECG Cable connector |
| 2 | Screen to display feedback from the NR device |
| 3 | Enter, Event button |
| 4 | Green led Indicator , Voice device microphone |
| 5 | Up button |
| 6 | Left button |
| 7 | Right button |
| 8 | Down button |
| 9 | ECG cable connector slot |
| 10 | Battery and SD Flash card compartment door |
| 11 | Battery and SD Flash card compartment cover latch |
| 12 | Battery and SD Flash card compartment |

## Model NR-314-P

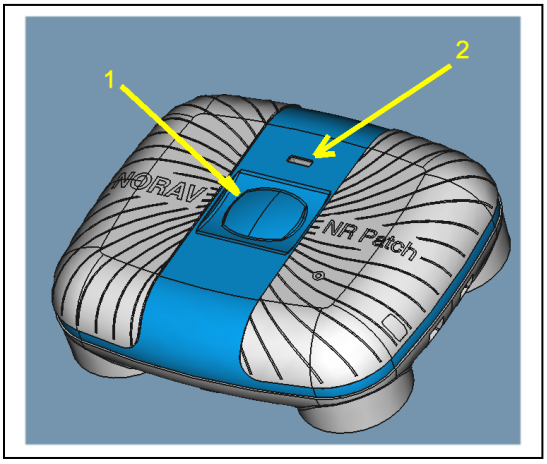


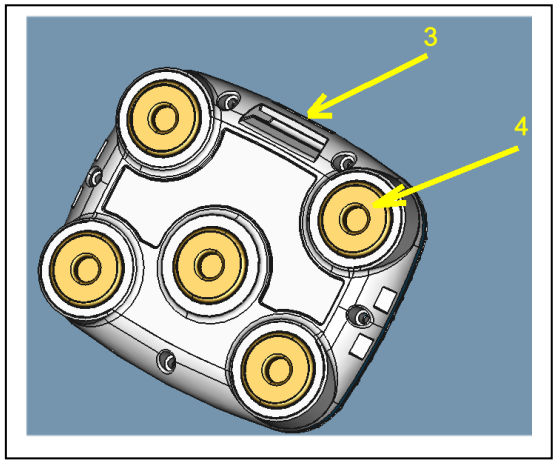


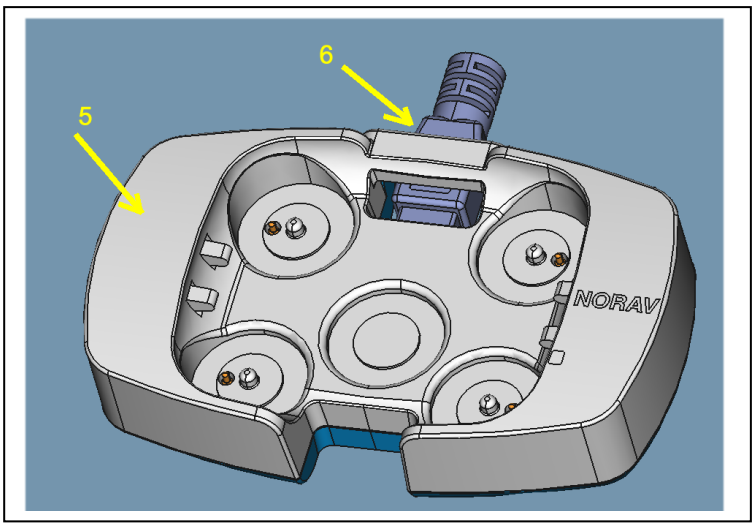


| Element | Description |
|---|---|
| 1 | Power ON/OFF or Event push button |
| 2 | LED indicator |
| 3 | Neck Strap assembly |
| 4 | 5 Snap receptacles for standard adhesive electrodes |
| 5 | NR-314-P Dock station |
| 6 | Detachable USB cable mini-USB to A-USB |

## NR-314-P Main Battery and Dock Station Overview

NR-314-P has an internal rechargeable lithium polymer battery that is not user replaceable. The NR-314-P comes with a Docking Station and USB cable that attaches to PC for recharging and uploading Holter data. The battery will take at most 3.5 hours to fully recharge between uses. If NR-314-P is attached to the dock station it will stop and close on going Holter recording. A fully charged battery will record Holter for up to 14 days, but we highly recommend that you charge the NR-314-P between patients.
If the NR-314-P is used frequently, for example, not left in the dock station for more than a day or two, it is fine to keep it plugged in between uses. If you use your NR-314-P less frequently, for example it might be plugged in for more than a few days, it is best to remove the NR-314-P from the dock station once full charged. You will then want to plug it in again to ensure it is fully charged before your next study, but that should only take a few minutes.

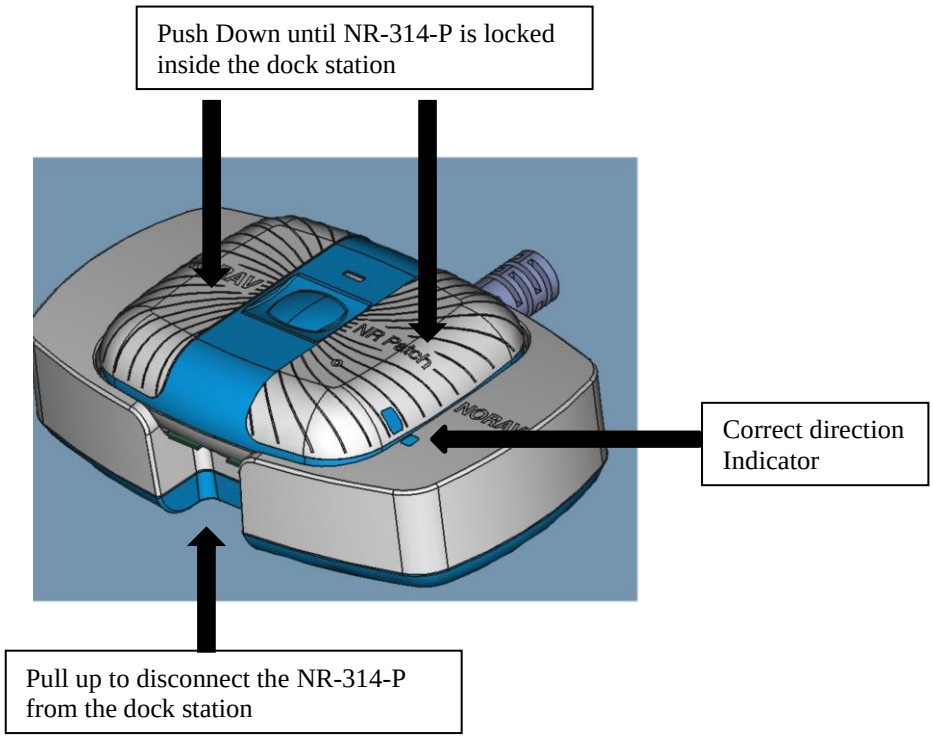


NR-314-P will flash its LED indicator in blue during charging. After NR-314-P internal battery is fully charged the LED will be solid blue light.
After disconnection of NR-314-P from the Dock Station or removing USB power, the NR-314-P will turn OFF itself.

**!**

**Caution**

- The Dock station shall connect only to computers that are complied with EN60950-1

# Memory Card Usage (SD card)

## Models: NR-302, NR-314, NR-1207 and NR-1207-3

The SD (Secure digital) card is a memory card that is formatted (see note below) exclusively for recording biological information. This card is an IC card composed of electrically erasable, non-volatile IC memory referred to as “flash memory”. This offers the advantage that the data contained in the IC card is retained while the power is shut down, thereby eliminating the need for backup batteries.

Open battery compartment cover by moving Left and Up the battery compartment cover latch.

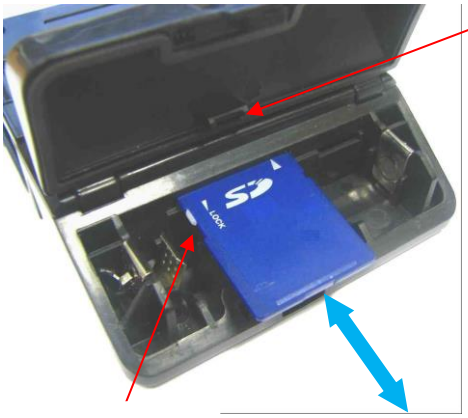


Memory card Retainer

Write-protect notch, Unlocked state shown

The memory card slot is a so-called "push-push slot".
In order to insert the memory card into the device, push the card into the slot until it locks in place.
To remove the memory card, push the card 1-2 mm into the slot to release the locking catch.
The battery must be removed prior to inserting or removing the SD card.
Battery compartment cover has a memory card retainer used to protect the card from falling out of its slot during recording.

**Caution**

- The NR device is mechanically protected from an incorrect insertion of the memory card. Do not force the card into the slot.
- Using the memory cards with other instruments (digital cameras, MP3 players, etc.) can lead to incorrect functioning and/or data loss.
- If memory card is not completely locked inside its slot, the card retainer (part of battery compartment cover) will not allow to close the cover. Do not push the cover when closing with force; it can damage the card and\or the card slot.

**Note**

- When looking at the SD card from the top, on the left side, there may be a write-protection notch. If notch is not in Unlocked state, slide the tab upward (Toward the contacts) to declare the card read/write enabled.
- If the storage space runs out during a recording, the recording is stopped automatically and the instrument switches off.

**Note**

- Use only a Norav Certified SD card for Recording.
- The NR device supports only SD cards formatted as follows:
  FAT(FAT16) with cluster size = 64KB for SD cards ≤ 4G or
  FAT32 with cluster size = 64KB for SD cards > 4G

# Main Battery

## Models: NR-302, NR-314, NR-314-T, NR-1207, NR-1207-3 and NR-1207-E

The NR is powered by one 1.5 volt AA Alkaline battery (IEC-LR6), one 1.2 volt AA rechargeable Nickel-Metal Hydride (NiMH) battery (IEC-HR6), or one 1.5 volt AA Li-FeS2 Lithium battery (IEC-FR6). Although battery life may last longer than a recording, batteries should not be re-used for a second patient. After one use, they should be disposed of following local ordinances.

## How to Insert Battery

Insert a fresh AA battery as indicated in illustration, be sure to first insert from the negative terminal. Pay special attention to the correct polarity of the battery

As indicated in the illustration, close battery compartment cover and press on it until latches into the base part.

**!**

**Caution**

- Check that NR device settings showing a correct Battery type in the setup of the NR device.

**!**

**Caution**

- Do not leave battery in the NR device for extended periods (more than two weeks) when the NR device is not in use.
- If you use rechargeable batteries, the battery recharger should be kept out of the patient environment and hook-up area.
- Dispose of used batteries carefully, using environmentally friendly methods wherever possible following the state's recycling laws or your facility's recycling policy

# RTC Back up Battery

## Models: NR-302, NR-314, NR-314-T, NR-1207, NR-1207-3 and NR-1207-E

The NR real-time clock is maintained by an internal rechargeable lithium cell, charged during recording from the main battery. With a full charge, the clock is maintained for at least 4 months after the main battery is removed. The clock cell is not replaceable by the user, and in the case of suspected failure the NR should be returned to Norav for service.

# Electrode Application Guide

**Note**

Many ECG adhesive electrodes are suitable for use. As ECG electrodes from different manufacturers have different electrical properties, the choice of ECG electrodes can considerably affect the measurement results and quality. Ensure that only high-quality electrodes are used. Wet gel electrodes are recommended.
Always refer to the ANSI/AAMI EC12:2000 Standard for safety, performance, and labeling requirements for the disposable electrodes, and guidelines for reliable patient connections.

Prepare the patient's skin prior to applying the electrodes. Skin is a poor conductor of electricity, so skin preparation is important in achieving good electrode-to-skin contact.

- If necessary, clip hair at the electrode sites (or shave sites, if needed).
- Clean and abrade the skin at the electrode sites to remove oil and dead skin.
- Wash the skin thoroughly with soap and water.
- Dry the electrode placement sites.

## Attaching Electrodes

- Attach the leads and the electrodes before placing the NR device on the patient.
- Apply the electrodes by peeling them, one at a time, from the protective backing and sticking them firmly to the patient's skin.
- The offset connector tab should be positioned in the same direction as the lead wires, towards the equipment.
- For NR-314-P model only: optionally use neck strap to prevent the device fall during recording.
- Place the electrode on the skin by gently pressing around the edge. For wet gel always avoid pressing down the center of the electrode. If in doubt refer to the directions on the reverse of the pouch.

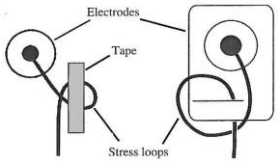


If you use lead lock or clip lock electrodes, be sure to use the lock or clip to relieve stress on each lead wire.
Otherwise, tape each lead wire into a stress loop to help prevent movement of the electrode.

**WARNING**

- As you attach electrodes, be careful to not let any unattached electrode come in contact with other conductive objects, including ground.
- Leave 1.5 meters (5 feet) of open area around the patient during NR device hookup and removal.
- Do not connect external devices to NR device. Connect patient lead wires only to patient electrode
- Keep the NR device and patient cable clean, especially the components that touch patients.
- Do not use electrodes for adults on children.
- Before each recording and before attaching sensors or electrodes to the patient, check the casing and the ECG patient cable for damage which may have occurred, for example, due to mechanical overload, falling from a great height or wear and tear (chafed patches on the cable). Do not use the instrument or the cable if you detect cracks, melted areas or any other signs of damage to the cable or housing.

**Caution**

- Verify that dates on applicable accessories have not expired.
- ECG electrodes can cause skin irritation. Examine skin for signs of irritation or inflammation and avoid placement of electrode in those areas. If skin irritation occurs during the procedure advise the patient to remove the electrodes and contact the health service provider as soon as possible.
- All electrodes should be of the same brand and type, to minimize noise.

**Note**

Excessive sweating can cause the electrodes to slide, become loose, fall off, and shorten wear time. It is recommended showering briefly with patient back to the water and avoid any activities that cause excessive sweating.

# Electrode Placement Scheme

Suggested electrode placements are shown in the diagrams below. However, it is up to the physician to make the final placement determination. The NR device's ECG display screen or Computer Analysis System that used Bluetooth communication can be used to verify a proper patient hookup.

**!**
**Caution**

- Do not relay on the NR device LCD display as a diagnostic tool.

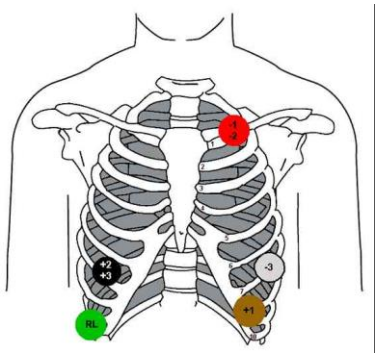


3 channel application with 5 lead
Option 1

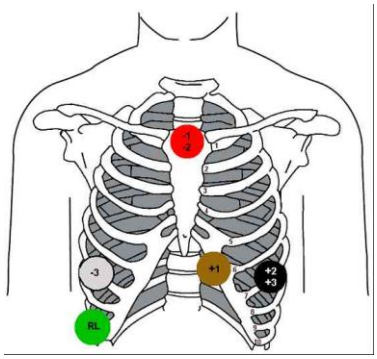


3 channel application with 5 lead
Option 2

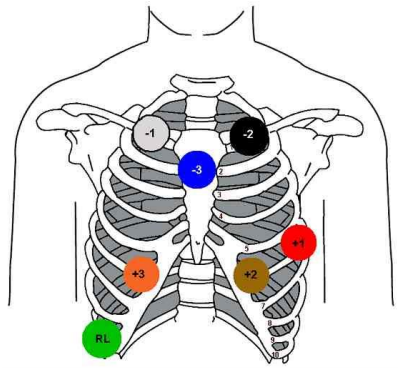


3 channel application with 7 lead
Option 1

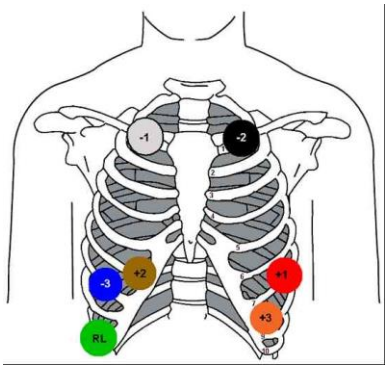


3 channel application with 7 lead
Option 2

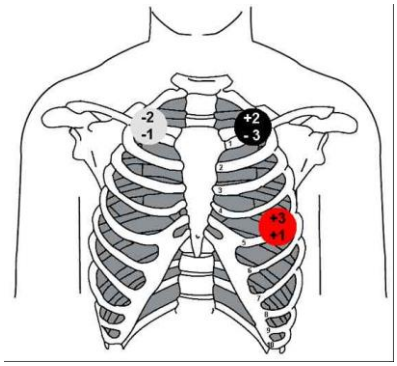


3 channel application with 3 leads

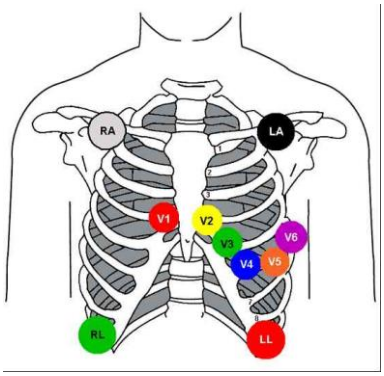


12 channel application with 10 leads

# Patient Cable Connection

## Models: NR-302, NR-314, NR-314-T, NR-1207, NR-1207-3 and NR-1207-E

### Connecting:

Insert the Patient ECG Cable connector into ECG cable connector slot of the NR unit, as shown on the picture. Make sure to insert the Cable connector until there is no space between the Cable connector and the unit.
Make sure that two latches of the Cable connector are latching with the unit.

### Disconnecting:

Remove the Patient ECG Cable connector by squeezing the two side latches on the head of the Cable connector and pulling away from the connector slot of the NR unit.

**!**

**Caution**

- Be careful not to connect the Patient ECG Cable connector upside down or at an angle into the ECG cable slot on the NR unit. This may result in damage to both the Cable connector and the ECG Cable input slot of the unit.
- Do not insert into the ECG Cable slot on the NR any other than the Patient ECG Cable connector. Damage can result to the both the ECG Cable slot input connector and Patient ECG Cable connector.
- Always check the presence of sealing O-ring on Patient ECG Cable connector and its quality. O-ring sealing protects the NR unit against ingress of splashing water when the Patient ECG Cable connector is fully fitted into the unit.
- During recording, make sure that the cable lead wires are not caught by the moving parts of a machine or sport equipment. This could lead to damage or injury (e.g. if loops are formed in the cable lead wires).
- NEVER pull on the cable itself because this can easily break the wire inside the insulation. Pulling on the cable also can cause a noisy and intermittent ECG recording.

**Note**

NR hardware includes Cable connected sense. If NR device will not detect connected Cable, it will display warning message with buzzer beep and show diagram of unit with not connected Cable connector.

# Screen Navigation

## Models: NR-302, NR-314, NR-314-T, NR-1207, NR-1207-3 and NR-1207-E

The NR device uses various menus to set preferences and enter patient information. Four keys, left, right, up and down, are used to navigate the menus. The enter key is used to make a selection of a highlighted item. NR device involves a simple sequential procedure comprising: Record Mode Setting, Date & Time Checking or Setting, Patient Identification Entry, ECG signal quality Checking and Start Recording.
The user interacts with the NR device through different LCD screens and five push-buttons.

**!**

**Caution**

- To prevent possible damage to the keypad, do not use sharp or hard objects to depress keys.

**Brief descriptions of NR device screens**

| Screen | Description |
|---|---|
| **Main** | Displays Current date\time, Main battery level, and following Menu items :<br>• Patient Data *(Display Patient data – ID or Name )*<br>• Voice Recording *(Record operator voice message - up to 20seconds )*<br>• Recording Settings *(Display enabled recording settings)*<br>xxxH = Record time in hours<br>\E = Event button enabled<br>\P = Pacemaker detection enabled<br>\R = Respiration enabled<br>\A = Acceleration sensor enabled |
| **Settings** | Displays Menu items:<br>• Patient Settings<br>➢ ID *(Change via Virtual keyboard screen)*<br>➢ First Name *(Change via Virtual keyboard screen)*<br>➢ Last Name *(Change via Virtual keyboard screen)*<br>➢ Birthday *(Change via Virtual keyboard screen)*<br>➢ Clinic ID *(Change via Virtual keyboard screen)*<br>➢ Display Format ***Patient ID***, ***Clinic ID***, ***Name*** *(Select patient data field to display on the Main screen)*<br>• Record Settings<br>➢ Record Time ***24,48,72,96,120,168, 336 hr***<br>*( 336 hours option is limited to 3 channel mode with 3, 4 , 5, 7 lead cable , 250 sample rate and Lithium battery only)*<br>➢ Sample Rate (of ECG) ***250,500,1000(*** *samples per second)*<br>➢ Pacemaker detection ***ON*** *or* ***OFF*** *(OFF by default. Once turned ON remains active within the current recording only)*<br>➢ Accelerometer ***ON*** *or* ***OFF***<br>➢ Respiration ***ON*** *or* ***OFF*** *(always OFF when Pacemaker detection is ON)*<br>➢ Diary ***OFF*** , ***Event button***, ***Symptom list***, ***Voice note*** *(in Holter/Holter+ mode)*<br>■ *Event button - Save Event for each button press*<br>■ *Symptom list – Select a symptom from list on the Display*<br>■ *Voice note - Record a Voice note*<br>➢ Voice note ***ON*** *or* ***OFF*** *(When ON - allow to record a Voice note) (for NR-1207-3 model in ECG+ mode)* |
| | |

**Brief descriptions of NR device screens** *(continue)*

| Screen | Description |
|---|---|
| **Settings** ***(continue)*** | • System Settings<br>➢ Date\Time<br>■ Date *(Month,Day,Year)*<br>■ Date Format *(MM/DD/YYYY, YYYY/MM/DD, DD/MM/YYYY, YYYY/DD/MM)*<br>■ Time *(Hour and Minute)*<br>■ Time Format *(12 or 24 hr)*<br>➢ Display<br>■ Contrast *(20-90%)*<br>■ Rotation *(0, 90, 180, 270 deg.)*<br>➢ Battery<br>■ Alkaline<br>■ NiMH<br>■ Lithium<br>➢ Language<br>■ English<br>■ Español<br>■ Deutsch<br>■ Français<br>■ Italiano<br>■ Português<br>■ Nederlands<br>■ Polski<br>■ Русский<br>■ Ελληνική<br>■ Türk<br>➢ Mode *(for NR-1207-3 model only)*<br>■ Holter<br>■ Holter+<br>■ ECG<br>■ ECG+<br>• Save as default (Press Enter to save as default current settings)<br>• About (Press Enter to see NR device information – Model, Serial number etc.) |
| **Lead check** | Displays the connection status of each lead |
| **ECG CH1,CH2,CH3 or I,II …. V6** | Displays the ECG signal in real time. Pacer pulse marks and the gain setting are also displayed.<br>To change the gain use up\down buttons of the keypad, gain settings are (0.5,1.0,2.0,4.0,8.0)<br>The gain setting is the same for all channels and only affects information displayed on the screen. The recording will always be made at the 1.0x gain setting.<br>The display grid size at 1.0x gain settings equals to 10 mm/mv (two grid boxes=1 mv).<br>If *Pacemaker Detection* is turned on, pacer pulse marks are displayed below the trace to indicate each detection of a pacer pulse. |
| **Start** | After configuring or reviewing all the settings, select the start screen and press *Enter*.<br>This will start the recording. During recording, the NR device displays the current time and time remaining to record. |
| **Info** | During recording NR device will display the date, current time, battery level indicator and time remaining for the recording. |

"Main" menu screen - explanation of menu navigation by using keypad buttons almost the same for the others menu screens.

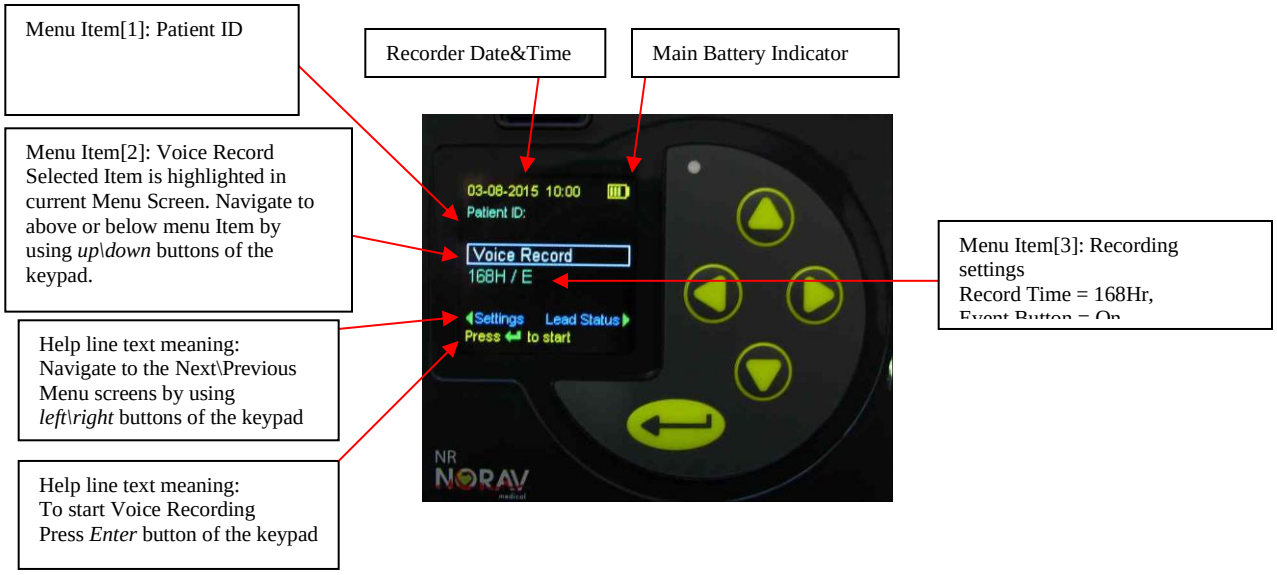


"Virtual Keyboard" menu screen (alphabet layout with lower case shown), used to enter Patient Data like ID, First Name etc. Use up\down\left\right buttons of the keypad to navigate via the virtual keyboard screen items.

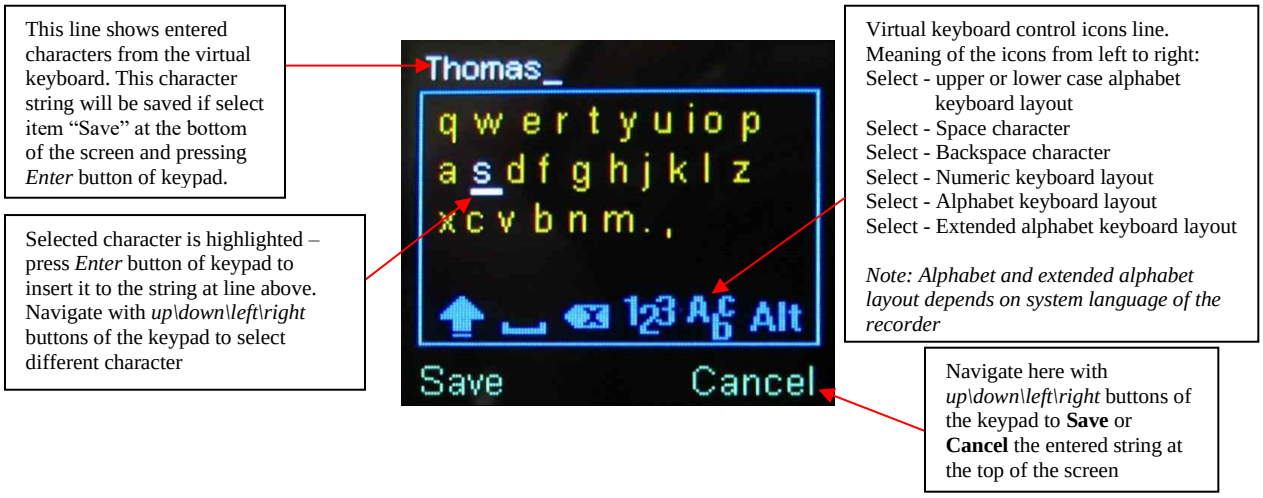

# Common Modes and Workflows

## Holter mode (for NR-302/314/1207/1207-3 and NR-314-P models)

A basic workflow for "classic" Holter recording procedure.

- Prepare NR device.
- Enter patient information.
- Hookup patient
- Check ECG leads quality.
- Start recording.
- While recording continues enter diary events by patient.
- When patient bring the NR device back stop the recording.
- Download the ECG recording file to the computer.
- Preview/Analyze the ECG in Holter software interface.

## Holter+ mode (for 1207-3 and NR-314-P models)

Advanced workflow allowing to acquire the ECG traces online while Holter recording is continues.

- Prepare NR device.
- Enter patient information.
- Hookup patient
- Check ECG leads quality.
- Start recording
- Acquire the live ECG every time when it is necessary
  *(patient must be near to the acquisition workstation)*
- While recording continues enter diary events by patient (optional).
- When patient bring the NR device back stop the recording.
- Download the ECG recording file to the computer.
- Preview/Analyze the ECG in Holter software interface.

## ECG mode (for NR-314-T/1207-E/1207-3 and NR-314-P models)

Standard workflow for PC-ECG acquisition.

- Prepare NR device.
- Hookup patient.
- Check ECG leads quality.
- Run the PC-ECG or Mobile ECG software application and enter patient information.
- Acquire the live ECG.

## ECG+ mode (for 1207-3 model only)

Advanced mode for record continuously the ECG traces in the NR device memory independently to live ECG is acquiring or not. Allows to store ECG records for more than one patient on the same memory card.

- Prepare NR device.
- Enter the patient information.
- Hookup the patient.
- Check ECG leads quality.
- Start ECG recording to the NR device memory card.
- Every time when it need - launch the PC-ECG or Mobile ECG software and acquire the live ECG.
- At the end testing of current patient – stop (pause) the ECG recording.
- Hookup the next patient and then continue the recording in the NR memory card.
- When NR memory card is filled – download the full disclosure ECG data to the computer.

# ECG Recording Procedure: Detailed Instructions

## Models: NR-302, NR-314, NR-314-T, NR-1207, NR-1207-3 and NR-1207-E

## Starting New Test

### 1. Prepare NR device

- Open NR device battery compartment door.
- Insert an SD card into NR device. *(Skip this step when use models NR-1207-E and NR-314-T.)*
- Insert a new battery and close the battery compartment door.
  (*Green led of the keypad will start flashing once per second*)
- Prepare the patient (*the patient should already be connected to the electrodes and patient leads*) and connect the ECG cable connector to the NR device unit.
- Turn on the NR device by pressing the *Enter* button of the keypad.

### 2. Enter Patient Information (for Holter, Holter+ and ECG+ mode)

If an SD card was preinstalled with the Patient Data\Recording Settings file, this information will be loaded by the NR device. Check Patient data (*ID, Name etc*.) using the LCD screens. If Patient data is missing or wrong enter Patient data using the LCD menus screens and unit keypad. Alternatively if using model with voice record enabled; the patient data can be recorded using voice record option in the "main" screen. In this way, the measurement can still be clearly identified. Recording is possible for up to 20 seconds. Make sure that the microphone (*Green led on keypad*) is close to your mouth when recording and that you speak at a normal volume.
Check recording settings, change them if required.

### 3. Check ECG Leads

Check the signal quality and amplitude of each channel via ECG screen menus.
If ECG signal quality does not show satisfactory ECG waveforms, reposition electrode sites using brand new electrodes and techniques described above in this manual. Instruct the patient to stand, sit, and lie while verifying the ECG signals. Instruct patient to walk in place. Verify no artifact or muscle noise is displayed on the NR device LCD screen. Otherwise, check stress loops and re-prep hookup sites with brand new electrodes.

### 4. Start Recording (for Holter, Holter+ and ECG+ mode)

- The ambulatory ECG recording is ready to begin. Access the "Start" screen.
  Press the *Enter* button of keypad to start recording.
- The LCD will show "Recording" screen. During recording the NR device will display the date, current time, battery level indicator and time remaining for the recording. If no button has been pressed for some time, the screen goes blank; and every time a button is pressed, the LCD will show "Recording" screen for a short time.
- Place NR device into pouch or holster and secure on the patient. All equipment, except the electrodes and a portion of the lead wires, should be over at least one layer of clothing so that it is not in direct contact with the patient's skin. Orient the NR device on the patient so that the *Enter* (*Event*) button is accessible and the LCD is visible.
- Advise the patient to not expose the NR device or electrodes to any wet environment; in addition, they should not shower, bathe, or swim while wearing the NR device.
- Instruct the patient on how to use the *Enter* (*Event*) button to indicate symptomatic events or activities of interest during the Holter test. The patient may also be given the opportunity to enter a diary at the time of the event. They should use the up/down arrows to choose the most appropriate entry. Alternatively if using model with voice record enabled; the patient can use the voice record to enter a diary.

## Acquire ECG Online (for Holter+, ECG and ECG+ mode)

In Holter+ recording mode the NR-1207-3 NR device is able to transmit the live ECG traces online.

To acquire the live ECG waveforms online use the Resting ECG software application of PC-ECG 1200 package or the Mobile ECG application for Android OS. Refer to the appropriate user manual accordingly.

## Enter Diary Event (for Holter, Holter+ mode)

Press and hold the Enter button on the NR device front panel. Depending to the configuration setting - might follow require to select the symptom from the list or add a voice note.

## Add New Patient Marker (for ECG+ mode only)

While the ECG Recording is running (the 'REC' label is flashing on a Lead Check screen) - press and hold the Enter button on the NR device front panel.
The patient counter will be increased and (if enabled) the voice note can be added at this time.

## Stop/Pause/Restart ECG Recording (for ECG+ mode only)

While the ECG Recording is running (the 'REC' label is flashing on a Lead Check screen) - press and hold simultaneously both left and right arrow buttons on the NR device front panel.
When the record control menu appears select the needed command from the list:

- "**Stop ECG**" - to pause the ECG recording (finish for current patient).
- "**Overwrite Record**" - to clean the memory card and restart the ECG recording (***previously recorded ECG traces will be erased from the NR device memory!***)
- "**Shutdown**" - to switch the NR device OFF before to remove the memory card and download the ECG recording to the computer.

## Stop Holter Recording (for Holter and Holter+ mode)

When the set recording duration has been reached or if the battery capacity is low, the NR device switches off automatically. The recording can be stopped at any time by pressing and holding both keypad buttons (left and right) for 3 seconds.

## Data Downloading

When the session is complete (completed by a trained medical technician) the ECG record data is available for analysis.

1) Remove the electrodes from the patient.
2) Remove the battery from the NR device.

The user has two options to analyze the captured ECG data by Computer Analysis System:

1) Remove the memory card from the NR device. Insert the memory card into the card reader of the Computer Analysis System and transfer the ECG data according to the manual for the Computer Analysis System.
2) The user also has the option (if enabled) to download the recording on the memory card via USB without having to remove the card from the NR device. Start by removing the patient cable, replace it with the USB cable and confirm that the card is still in the NR device. Attach the other end of the USB cable to any available USB port on a computer. The NR device is now a card reader and can be accessed similarly as any removable disk drive would be.

Once the data transfer is complete, erase the ECG record data from the memory card.
The memory card is now free to be used for the next patient.

**Note**

- The NR device with installed battery and SD card, turned ON and ECG cable connector connected to the unit; and is left for 10 minutes without pressing any button of keypad, will start the test automatically (*for Holter and Holter+ modes*). This feature of the device shall eliminate the risk that the operator forgets to start the test.
- The NR device with installed battery and SD card, turned ON and ECG cable connector connected to the unit; and detects a recording saved on the memory card which has not yet been downloaded by the Computer Analysis System, will show warning massage screen and will offer an option to erase the old record and prepare the device for a new record on the same memory card.
- If the batteries run flat during a recording, it is necessary to replace them with fully charged batteries within 1 hour. If the batteries are replaced in time, the NR device will resume the recording. However, the device will not continue in the test, if the batteries are not replaced in time. The data recorded before the battery runs flat are stored in the memory card and can be freely accessed and analyzed after download by Computer Analysis System.
- The NR device will only allow you to select settings for a recording what will fit on the SD flash card. There is a relationship between the record time, sample rate, and number of channels. By choosing a higher value in one setting, you may have to choose a lower value than you want in another setting. It is best to first set the lowest setting you desire, then the second highest, and so on.

## Model NR-314-P

### Start New Recording

Connect NR-314-P to the dock station, run Setup Software at Computer Analysis system. Setup patient demographic data and set recording parameters. Download settings to the NR-314-P.
Disconnect NR-314-P from the dock station. Turn ON the NR-314-P NR device. Wait NR device finishing its initialization procedure by monitoring LED changing its state from fast flash to solid green light.
Press button for 3 seconds, wait LED start slow flash, release the button. Recording will start after 30 seconds, and LED will turn OFF after 60 seconds.

### Recording in Progress: Available Actions

Short press on button will turn LED ON blue solid for 2 seconds.
If press and hold button for 3 seconds it will allow to record a user event, LED will stay blue solid for 15 seconds and then turned OFF.

### Stop Recording

When the set recording duration has been reached or if the battery capacity is low, the NR-314-P NR device switches off automatically. The recording can be stopped at any time by pressing and holding push button for 15 seconds.

### Data Downloading

When the session is complete the ECG record data is available for analysis. Remove the electrodes from the patient. Disconnect NR-314-P form the electrodes. Connect NR-314-P to the dock station. Wait LED is flashing blue fast. The NR device is now a card reader and can be accessed similarly as any removable disk drive would be. Once the data transfer is complete, erase the ECG record data from the NR-314-P internal memory. The NR-314-P memory is now free to be used for the next patient.

**Note**

- The NR-314-P turned ON; and is left for 10 minutes without pressing button, will start recording automatically.
- The NR-314-P turned ON; and detects a recording saved on the memory which has not been downloaded to the computer yet, will turn ON LED solid RED for 5 sec and turns OFF.

## Switching Device ON/OFF

To switch ON the NR-314-P, push the button for 2 seconds and release it. LED will fast flash green.
After NR-314-P completes its internal initialization, the LED will be solid green light.
To switch OFF the NR-314-P, push and hold the button for 15 seconds.
After 15 seconds the LED will be OFF.

# Maintenance and Cleaning

## Cleaning

### Reprocessing Methods for Reusable Items

The following tables summarize the required post-test reprocessing procedures for each reusable item.

**ECG Device Surfaces**

| | |
|---|---|
| **Level of Reprocessing** | Low-level disinfection |
| **When** | Immediately after use |
| **Pretreatment** | Wipe with a moist sponge or paper towel |
| **Manual Cleaning** | Wipe the surface with a soft cloth dampened with a solution of warm water and mild dishwashing detergent or ordinary alcohol-free hand soap.<br>Dispose the soft cloth. |
| **Disinfection** | Repeat manual cleaning.<br>Wipe device surface with alcohol wipes.<br>Dispose the soft cloth. |
| **Drying** | Air dry or wipe all surfaces with a dray clean cloth or paper towel. |
| **Note** | Do not clean in Ultrasonic baths. |

**Patient Cables\Leadwires**

| | |
|---|---|
| **Level of Reprocessing** | Low-level disinfection |
| **When** | Immediately after use |
| **Pretreatment** | Wipe with a moist sponge or paper towel |
| **Manual Cleaning** | Wipe the surface with a soft cloth dampened with a solution of warm water and mild dishwashing detergent or ordinary alcohol-free hand soap.<br>Dispose the soft cloth. |
| **Disinfection** | Repeat manual cleaning.<br>Wipe device surface with another soft cloth moistened with 70% isopropyl alcohol\ethanol.<br>Dispose the soft cloth. |
| **Drying** | Air dry or wipe all surfaces with a dray clean cloth or paper towel. |
| **Note** | Do not clean in Ultrasonic baths. |

**Sterilization for Patient Cables\Leadwires**

| | |
|---|---|
| **Sterilization Method** | Ethylene oxide (EtO) |
| **When** | Only when necessary as specified by your facility. |
| **Pretreatment** | Prior to sterilizing cables\leadwire should first be cleaned. To avoid long term damage of cables\leadwire. |
| **Sterilization procedure** | The product may only be sterilized with ethylene oxide (EtO) at a maximum temperature of 50 ºC (122 ºF). |
| **After Sterilization** | After sterilization, cables must be safely and thoroughly ventilated before handling or use. Recommendation of an aeration time of 12 hours minimum to dissipate residual EtO in the cable below 250 ppm. |
| **Note** | It is important to check that there are no alterations to the components or overall functioning of the product in sterilization. At first sight of alteration the product must be replaced. |
| **Validation** | The validation of the subsequent sterilization is the responsibility of the user. |
| **Note** | Do not autoclave cables\leadwires. Do not sterilize by irradiation or steam. Do not clean in Ultrasonic baths. |

WARNING

Before cleaning any part of the equipment disconnect the equipment from the power supply and disconnect the device from any other equipment or external devices.

**Caution**

- All but NR-314-P models: remove the battery before cleaning the NR device.
- Take care to prevent chemicals\liquids from entering the connectors or internal part of the NR device.
- The battery contacts should not come in contact with soap or water.
- Do not polish the housing with abrasive or chemical cleanser.
- Use of alcohol, acetone, Alkyl Dimethyl Benzyl ammonium chlorides or a methyl ammonium chloride is NOT recommended to clean the reorder unit and holster. Use of alcohol or acetone on lead wires could cause the lead wires to stiffen and the insulating plastic to crack. Use of a methyl ammonium chloride (commonly found in many consumer wipes) on the NR device unit and holster could cause the plastic to deteriorate.

**Note**

If liquid penetrates the device, i.e. during cleaning or recording, this may interfere with correct functioning. Switch the NR device OFF, remove the patient cable, the memory card and the battery. Leave the NR device in a warm, dry room with the battery door open for 48 hours. If the functioning is still affected, contact the contact customer support.

## Maintenance

Before using the NR device, execute the check of the unit in accordance with the check procedure. In case that any rejected items are found as a result of the check, it will be totally judged as rejection. Take the corrective measures as the rejected items. Use the NR device after all the items become accepted.
Unit check shall be performed by each medical institution, or by Norav personnel, representative agent, or an authorized third party. For more details, do not hesitate to consult your dealer or Norav Medical personnel.

| Details of the check | Check Method | Criteria |
|---|---|---|
| **Operation manual** | Check that the operation manual is kept in a predetermined place. | Should be kept in a predetermined place. |
| **Cracks and distortion of the NR device enclosure** | Visually check the NR device enclosure for cracks and distortion. | Must be free from cracks and distortion. |
| **Keypad buttons** | Check whether the keypad buttons have tactile feedback when pressed | Must get tactile feedback. |
| **Battery contacts in the battery compartment** | Visually check the battery contacts for strain, skew, and corrosion. | Must be free from strain, skew, and corrosion. |
| **Battery compartment door latch** | Check spring loaded in the battery door latch. | Spring must be loaded. |
| **Battery compartment** | Check whether dirt or hair is not accumulated between the battery compartment and its door | Must be free from dirt or hair. |
| **SD card** | Visually check for scratches and damage. | Must be free from scratches and damages. |
| **ECG Snap Buttons** | Visually check for damage and corrosion | Must be free from damages and corrosion. |

# Storage

Before storage, make sure to remove a main battery and a SD card from the NR device and close the battery compartment door tightly. Store the NR device in the provided storage case.

| | |
|---|---|
| ! **Caution** | • Store the NR device in an area free from water or humidity<br>• Take care to avoid areas subject to high humidity, poor ventilation and direct sunlight; store the NR device in an area free from any adverse effects of surrounding air containing dust, sodium, and sulfur.<br>• Do not store the NR device in an area where chemicals are kept or which is exposed to chemical fumes or vapors. |

# Service

If there is a problem with the NR device, review the Troubleshooting section for a listing of problems and solutions. If additional assistance is required, contact customer support via phone, fax or e-mail listed in this manual. Call customer support before returning a NR device to make shipping arrangements.

All repairs on products under warranty must be performed or approved by Norav Medical. Unauthorized repairs void the warranty. In addition, whether or not covered under warranty, any product repair shall exclusively be performed by Norav Medical certified service personnel.

When calling, please be prepared to provide:
■ Product name and complete description of the problem.
■ Serial number of your product.

In case a return cannot be avoided, the representative will record all necessary information and will provide a Return Material Authorization (RMA) number, as well as the appropriate return address. An RMA number must be obtained prior to any return.

If you have to return goods for service, follow these recommended packing instructions:
■ Remove all cables, sensors, and ancillary products (as appropriate) before packing, unless you suspect they are associated with the problem.
■ Wherever possible use the original shipping carton and packing materials.
■ Include a packing list and the Norav Return Material Authorization (RMA) number.

It is recommended that all returned goods be insured. Claims for loss or damage to the product must be initiated by the sender.

# Calibration

The device does not need any calibration.

# Troubleshooting

## Models: NR-302, NR-314, NR-314-T, NR-1207, NR-1207-3 and NR-1207-E

| Symptom | Solution |
|---|---|
| **No display or NR device does not power on** | ■ Ensure battery is inserted with correct polarity.<br>■ Install a new AA battery. |
| **Low battery (*message*)** | ■ Install a new AA battery.<br>■ Inspect battery compartment, clean contacts if necessary. |
| **No Cable (*message*)** | ■ Ensure patient cable (lead set) is connected to the NR device. The NR device will not pass the screen unless a cable is connected.<br>■ Check that the NR device sided connector is not damaged. Check that the cable connector pins are not broken or bent / damaged. |
| **Noise artifacts on ECG signal** | ■ Ensure you have prepared the patient's skin according to the instructions.<br>■ Ensure the electrodes are properly applied to the patient.<br>■ Ensure the leads are making proper contact with the electrodes.<br>■ Replace the Patient ECG cable. |
| **Lead OFF (*message*)** | ■ Ensure you have prepared the patient's skin according to the instructions.<br>■ Ensure the electrodes are properly applied to the patient.<br>■ Ensure the leads are making proper contact with the electrodes.<br>■ Replace the Patient ECG cable. |
| **SD Card Error (*message*)** | ■ Ensure the memory card is Norav Certified.<br>■ Ensure the memory card is not write protected (small switch on the SD Card)<br>■ Reformat the memory card or replace the card with a new Norav certified memory card. |
| **Previous recording found (*message*)** | ■ Download the ECG data with Computer Analysis System, or delete it from the SD card using left and enter buttons. |
| **Set Date/Time (*message*)** | ■ The internal battery that runs the real time clock may not be fully charged. This battery is built into the NR device and is not user replaceable. It is recharged every time you insert an AA battery. If the NR device is unused for an extended period of time, the internal battery can become discharged. To fully recharge the internal real time clock battery, insert a fresh AA battery into the NR device and let the NR device charge, for 12 hours. |
| **SD card too small (*message*)** | ■ Check that Record Settings screen is set for the desired number of hours. Memory card has only enough memory capacity to run for the number of Hours which are available as valid selections in the Record Settings menu. |

## Model NR-314-P

| Symptom | Solution |
|---|---|
| NR device does not power on | ■ Ensure that the NR-314-P is fully charged |
| **RED LED** is ON when not connected to dock station | ■ Ensure previous record file downloaded to Computer Analysis System and Removed from the internal memory of the NR-314-P.<br>■ Ensure RTC set correctly via Computer Analysis System |
| **RED LED** is ON when connected to dock station | ■ Use only Norav USB cable, try replacing USB cable.<br>■ Try connecting USB cable to other USB port or to another computer |
| **BLUE LED** is OFF when connected to dock station | ■ Use only Norav USB cable, try replacing USB cable.<br>■ Ensure USB cable is connected to powered-on computer<br>■ Ensure NR-314-P connected correctly to the dock station |
| Connected to dock station but NR device drive not visible on the computer | ■ Use only Norav USB cable, try replacing USB cable.<br>■ Try connecting USB cable to other USB port<br>■ Ensure NR-314-P connected correctly to the dock station |

# Technical Specifications

## Models: NR-302, NR-314, NR-314-T, NR-1207, NR-1207-3 and NR-1207-E

| | Conditions | min | typical | max | Unit |
|---|---|---|---|---|---|
| **Dimensions** | | | | | |
| Width | | | 92 | | mm |
| Height | Without ECG cable | | 75 | | mm |
| Depth | | | 23 | | mm |
| Weight | Without battery | | 103 | | g |
| Ingress protection against water | With ECG cable connected, Battery door closed and sealing installed. | | IP22 | | |
| **ECG** | | | | | |
| Channels | | 3 | | 8 | |
| Input impedance | | >10 | | | Mohm |
| CMRR | | >90 | | | dB |
| Frequency Response HPF | Recording | | 0.05 | | Hz |
| Frequency Response LPF | Recording | 65 | | 260 | Hz |
| Dynamic range | Recording, peak to peak | | 10 | | mV |
| A/D bit Resolution | Recording | | 12 | | bit |
| Sampling rate | Recording | 250 | | 1000 | Hz |
| Pacemaker detection | Analogue detection on 2 channels | | | | |
| Amplitude | | 2 | | 700 | mV |
| Width | | 0.1 | | 2 | ms |
| **Accelerometer** | | | | | |
| Channels | | | 3 | | |
| Dynamic range | Recording, peak to peak | | 4 | | g |
| **Respiration** | | | | | |
| Channels | Sensing electrodes ch1+,ch1- | | 1 | | |
| Excitation current | | | 27.3 | | uA |
| Excitation frequency | | | 64 | | kHz |
| **Power** | | | | | |
| Supply voltage | 1x AA battery | 1.0 | 1.5 | 2.7 | V |
| Internally occurring voltage | | | 2.8 | 13 | V |
| In RMS current during recording | Vbatt=1.5V | 10 | | 150 | mA |
| **Ambient conditions** | | | | | |
| Ambient temperature | Storage | -20 | | +60 | ºC |
| | Operation | +10 | | +45 | ºC |
| Humidity (non-condensing) | Storage | 10 | | 95 | %RH |
| | Operation | 10 | | 95 | %RH |
| Atmospheric pressure | Storage | 700 | | 1060 | hPa |
| | Operation | 700 | | 1060 | hPa |

| | |
|---|---|
| **Conformance to Regulatory Standards** | IEC 60601-1,<br>IEC 60601-1-2,<br>IEC 60601-2-25,<br>IEC 60601-2-47,<br>IEC 60601-1-11 |
| **Classification** | Type-BF applied part (NR-314, NR-302, NR-1207),<br>Defibrillation-Proof Type CF Applied Part (NR-1207-3, NR-2017-E, NR-314-T),<br>Internally powered equipment,<br>Equipment for continuous operation |
| **Communication** | USB 2.0 HS, |

| | |
|---|---|
| | Bluetooth 2.1+EDR Class1 |

## Model NR-314-P

| | |
|---|---|
| **ECG** | |
| ECG Channels | 3 channels |
| Recording capacity | 2GB |
| Input impedance | >10 Mohm |
| CMRR | >90 db |
| Dynamic range | 10mV p-p |
| Maximum DC input | 800mv p-p |
| A/D bit resolution | 12bit (24 bit acquisition) |
| Pacemaker detection | Analog detection, 2-700 mV at 0.1-2 ms |
| Sampling rate | 128,256,512 and 1024 |
| Frequency response | 128 Sampling rate: 0.05 – 25 Hz<br>256 Sampling rate: 0.05 – 51 Hz<br>512 Sampling rate: 0.05 – 102 Hz<br>1024 Sampling rate: 0.05 – 204 Hz |
| Recording Time (maximum) | 128 Sampling rate: 14 day<br>256 Sampling rate: 9 day<br>512 Sampling rate: 7 day<br>1024 Sampling rate: 4 day |
| **Accelerometer** | |
| Channels | 3 channels |
| Dynamic range | 4g p-p |
| **Physical** | |
| Dimensions | 47 x 55.5 x 17.8 mm |
| Weight | 41g |
| Protection against objects and water ingress | IP64 |
| **Power** | |
| Battery type | Lithium-ion polymer |
| Battery Capacity | 700 mAh |
| Nominal Voltage | 3.7V |
| Charging Voltage | 4.2V |
| Battery life | 500 recharges |
| **Ambient conditions** | |
| Operating Temperature | +5 to +45 ºC |
| Storage Temperature | -25 to +70 ºC |
| Operating Humidity | 10 to 95 %RH |
| Storage Humidity | 10 to 95 %RH |
| Operating Atmospheric pressure | 700 to 1060 hPa |
| Storage Atmospheric pressure | 700 to 1060 hPa |

| | |
|---|---|
| **Conformance to Regulatory Standards** | IEC 60601-1,<br>IEC 60601-1-2,<br>IEC 60601-2-47,<br>IEC 60601-1-11 |
| **Classification** | Type-BF applied part,<br>Internally powered equipment,<br>Equipment for continuous operation |
| **Communication** | USB 2.0 HS,<br>Bluetooth Low Energy (BLE 5.0) |

# ECG Cables and Accessories

## Models: NR-302, NR-314, NR-314-T, NR-1207, NR-1207-3 and NR-1207-E

| Item | Part Number | NR Compatibility | Application | Defib. protected |
|---|---|---|---|---|
| **ECG Cables** | | | | |
| **3 Lead Patient Cable, Snap, AHA** | C3-S-U-EI | 302, 314, 1207, 1207-3 | Holter | No |
| **4 Lead Patient Cable, Clip, AHA** | C4-C-U-EI-07 | 314-T, 1207-3, 1207-E | Telemetry, Stress | Yes |
| **4 Lead Patient Cable, Clip, IEC** | C4-C-E-EI-07 | 314-T, 1207-3, 1207-E | Telemetry, Stress | Yes |
| **5 Lead Patient Cable, Snap, AHA** | C5-S-U-EI | 314-T | Telemetry | No |
| **5 Lead Patient Cable, Snap, AHA** | C5-S-U-EI | 302, 314, 1207, 1207-3 | Holter | No |
| **5 Lead Patient Cable, Clip, IEC** | C5-C-E-EI-07 | 1207-3, 1207-E | Rest | Yes |
| **5 Lead Patient Cable, Clip, IEC** | C5-C-E-EI-08 | 1207-3, 1207-E | Rest | Yes |
| **5 Lead Patient Cable, Clip, AHA** | C5-C-U-EI-07 | 1207-3, 1207-E | Rest | Yes |
| **5 Lead Patient Cable, Clip, AHA** | C5-C-U-EI-08 | 1207-3, 1207-E | Rest | Yes |
| **7 Lead Patient Cable, Snap, AHA** | C7-S-U-EI | 302, 314, 1207, 1207-3 | Holter | No |
| **7 Lead Patient Cable, Snap, IEC** | C7-S-E-EI | 302, 314, 1207, 1207-3 | Holter | No |
| **10 Lead Patient Cable, Snap, AHA** | C10-S-U-EI | 1207, 1207-3 | Holter | No |
| **10 Lead Patient Cable, Snap, IEC** | C10-S-E-EI | 1207, 1207-3 | Holter | No |
| **10 Lead Patient Cable, Clip, AHA** | C10-C-U-EI-07 | 1207-3, 1207-E | 12-lead ECG | Yes |
| **10 Lead Patient Cable, Clip, IEC** | C10-C-E-EI-07 | 1207-3, 1207-E | 12-lead ECG | Yes |
| **10 Lead Patient Cable, Banana, AHA** | C10-B-U-EI | 1207-3, 1207-E | 12-lead ECG | Yes |
| **10 Lead Patient Cable, Banana, IEC** | C10-B-E-EI | 1207-3, 1207-E | 12-lead ECG | Yes |
| **Accessories** | | | | |
| **USB 2.0 HS Cable, 1.5m** | USBA-1.5M-EI | 302, 314, 1207, 1207-3 | | |
| **NR device Holster** | NR-HOL | 302, 314, 1207, 1207-3, 1207-E | | |
| **NR device Pouch** | NR-P | 302, 314, 1207, 1207-3, 1207-E | | |
| **Certified NR SD Memory Card 2GB** | NR-2G-SD | 314, 1207, 1207-3 | | |
| **Certified NR SD Memory Card 512MB** | NR-512M-SD | 302 | | |

## Model NR-314-P

| Item | Part Number |
|---|---|
| NR-314-P dock station | NRP-USB-DOCKING-03 |
| NR-314-P neck strap | NECK-LANYARD-NRp-01 |
| USB Cable A-to-B(mini) 1.5m | C-USB-AB (mini)1.5 |
| 3 ECG lead wires set, Snap, F-to-M, 25/45/65cm | L3-S-MF-NRP-1-08 |

# Electromagnetic Emissions and Immunity Information

Refer to the following tables for specific information regarding NR device compliance to IEC 60601-1-2.

## Models: NR-302, NR-314, NR-314-T, NR-1207, NR-1207-3 and NR-1207-E

### Table 1: Electromagnetic Emissions

| Emissions Test | Compliance | Electromagnetic Environment—Guidance |
|---|---|---|
| *This device is intended for use in the electromagnetic environment specified below. The customer and/or user of this device should ensure that it is used in such an environment.* | | |
| RF Emissions CISPR 11 | Group 2 | This device must emit electromagnetic energy in order to perform its intended function. Nearby electronic equipment may be affected. |
| RF Emissions CISPR 11 | Class B | This device is suitable for use in all establishments, including domestic and those directly connected to the public low-voltage power supply network that supplies buildings used for domestic purposes. |
| Harmonic Emissions IEC 61000-3-2 | N/A | |
| Voltage Fluctuations/Flicker Emissions IEC 61000-3-3 | N/A | |

### Table 2: Electromagnetic Immunity

| Immunity Test | IEC 60601 Test Level | Compliance Level | Electromagnetic Environment—Guidance |
|---|---|---|---|
| *This device is intended for use in the electromagnetic environment specified below. The customer and/or user of this device should ensure that it is used in such an environment.* | | | |
| Electrostatic Discharge (ESD) IEC 61000-4-2 | ±6 kV contact<br>±8 kV air | ±6 kV contact<br>±8 kV air | Floors should be wood, concrete, or ceramic tile. If floors are covered with synthetic material, relative humidity should be at least 30%. |
| Electrical Fast Transient/Burst IEC 61000-4-4 | ±2 kV for power supply lines<br>±1 kV for input/output lines | N/A | Mains power quality should be that of a typical commercial or hospital environment. |
| Surge IEC 61000-4-5 | ±1 kV differential mode<br>±2 kV common mode | N/A | Mains power quality should be that of a typical commercial or hospital environment. |
| Voltage dips, short interruptions, and voltage variations on power supply input lines IEC 61000-4-11 | ±5% $U_T$ (>95% dip in $U_T$) for 0.5 cycle<br>±40% $U_T$ (60% dip in $U_T$) for 5 cycles<br>±70% $U_T$ (30% dip in $U_T$) for 25 cycles<br><5% $U_T$ (>95% dip in $U_T$) for 5 sec. | N/A | Mains power quality should be that of a typical commercial or hospital environment. |
| Power Frequency (50/60 Hz) Magnetic Field IEC 61000-4-8 | 3 A/m | 3 A/m | Power frequency magnetic fields should be at levels characteristic of a typical location in a typical commercial or hospital environment. |
| **NOTE**: $U_T$ is the AC mains voltage before application of the test level. | | | |

### Table 3: Guidance and Manufacturer's Declaration—Electromagnetic Immunity

| Immunity Test | IEC 60601 Test Level | Compliance Level | Electromagnetic Environment—Guidance |
|---|---|---|---|
| *This device is intended for use in the electromagnetic environment specified below. The customer and/or user of this device should ensure that it is used in such an environment.* | | | |
| Portable and mobile RF communications equipment should be used no closer to any part of the device, including cables, than the recommended separation distance calculated from the equation applicable to the frequency of the transmitter. | | | |
| | | | **Recommended Separation Distance** |
| Conducted RF IEC 61000-4-6 | 3 Vrms<br>150 kHz to 80 MHz | 3 Vrms | $d = 1.17\sqrt{P}$ |
| Radiated RF IEC 61000-4-3 | 3 V/m<br>80 MHz to 2.5 GHz | 3 V/m | $d = 1.17\sqrt{P}$ 80 MHz to 800 MHz<br>$d = 2.33\sqrt{P}$ 800 MHz to 2.5 GHz<br>where *P* is the maximum output power rating of the transmitter in watts (W) according to the transmitter manufacturer and *d* is the recommended separation distance in meters (m).<br>Field strengths from fixed RF transmitters, as determined by an electromagnetic site survey[a], should be less than the compliance level in each frequency range[b].<br>Interference may occur in the vicinity of equipment marked with the following symbol: |

a. Field strengths from fixed transmitters, such as base stations for radio (cellular/cordless) telephones and land mobile radios, amateur radio, AM and FM radio broadcast and TV broadcast cannot be predicted theoretically with accuracy. To assess the electromagnetic environment due to fixed RF transmitters, an electromagnetic site survey should be considered. If the measured field strength in the location in which the device is used exceeds the applicable RF compliance level above, the device should be observed to verify normal operation. If abnormal performance is observed, additional measures may be necessary, such as reorienting or relocating the device

b. Over the frequency range 150 kHz to 80 MHz, field strengths should be less than [3] V/m.

**NOTES:**

- At 80 MHz and 800 MHz, the higher frequency range applies.
- These guidelines may not apply in all situations. Electromagnetic propagation is affected by absorption and reflection from structures, objects, and people.

### Table 4: Recommended Separation Distances

The following table details the recommended separation distances between portable and mobile RF communications equipment and NR device.

| *This device is intended for use in an electromagnetic environment in which radiated RF disturbances are controlled. Users of this device can help prevent electromagnetic interference by maintaining a minimum distance between portable and mobile RF communication equipment (transmitters) and the device as recommended below, according to maximum output power of the communications equipment.* | | | |
|---|---|---|---|
| | **Separation Distance According to Frequency of Transmitter(m)** | | |
| **Rated Maximum Output Power of Transmitter**<br>**W** | **150 kHz to 80 MHz**<br>$d = 1.17\sqrt{P}$ | **80 MHz to 800 MHz**<br>$d = 1.17\sqrt{P}$ | **800 MHz to 2.5 GHz**<br>$d = 2.33\sqrt{P}$ |
| 0.01 | 0.12 | 0.12 | 0.23 |
| 0.1 | 0.37 | 0.37 | 0.74 |
| 1 | 1.2 | 1.2 | 2.3 |
| 10 | 3.7 | 3.7 | 7.4 |
| 100 | 12 | 12 | 23 |

For transmitters rated at a maximum output power not listed above, the recommended separation distance *d* in meters (m) can be estimated using the equation applicable to the frequency of the transmitter, where *P* is the maximum output power rating of the transmitter in watts (W) according to the transmitter manufacturer.

**NOTES:**

- At 80 MHz and 800 MHz, the higher frequency range applies.
- These guidelines may not apply in all situations. Electromagnetic propagation is affected by absorption and reflection from structures, objects, and people.

# Model NR-314-P

### Table 5: Electromagnetic Emissions

| Emissions test | Compliance | Electromagnetic environment – guidance |
|---|---|---|
| RF emissions CISPR 11 | Group1 Class B | The NR-314-P uses RF energy only for its internal function. Therefore, its RF emissions are very low and are not likely to cause any interference in nearby electronic equipment. |
| Harmonic emissions IEC 61000-3-2 | Class A | The NR-314-P is suitable for use in all establishments other than domestic, and may be used in domestic establishments and those directly connected to the public low-voltage power supply network that supplies buildings used for domestic purposes, provided the following warning is heeded: Warning: This equipment is intended for use by healthcare professionals only. This equipment may cause radio interference or may disrupt the operation of nearby equipment. It may be necessary to take mitigation measures, such as re-orienting or relocating the ME EQUIPMENT or shielding the location. |
| Voltage Fluctuations and Flicker IEC 61000-3-3:2013 | Complies | |

### Table 6: Electromagnetic Immunity

| IMMUNITY test | IEC 60601 test level | Compliance level | Electromagnetic environment – guidance |
|---|---|---|---|
| Electrostatic discharge (ESD)<br>IEC 61000-4-2 | 8 kV contact<br>2, 4, 8, 15kV air | 8 kV contact<br>2, 4, 8, 15kV air | Floors should be wood, concrete or ceramic tile. If floors are covered with synthetic material, the relative humidity should be at least 30 %. |
| Electrical fast transient/burst<br>IEC 61000-4-4 | 2 kV for power supply lines<br>1 kV for input/output lines | 2 kV for power supply lines | Mains power quality should be that of a typical commercial or hospital environment. |
| Surge<br>IEC 61000-4-5 | 1 kV line(s) to line(s)<br>2 kV line(s) to earth<br>2 kV Signal input/output) to earth | 1 kV line(s) to line(s)<br>2 kV line(s) to earth<br>2 kV Signal input/output) to earth | Mains power quality should be that of a typical commercial or hospital environment. |
| Voltage dips, short interruptions and voltage variations on power supply input lines<br>IEC 61000-4-11 | 0% UT; 0.5cycle at 0°, 45°, 90°, 135°,180°, 225°, 270° and 315°<br>0% UT; 1cycle and 70% UT; 25/30 cycles<br>Single phase at 0° 0% UT; 250/300 cycle | 0% UT; 0.5cycle at 0°, 45°, 90°, 135°,180°, 225°, 270° and 315°<br>0% UT; 1cycle and 70% UT; 25/30 cycles<br>Single phase at 0° 0% UT; 250/300 cycle | Mains power quality should be that of a typical commercial or hospital environment. If the user of the ME EQUIPMENT requires continued operation during power mains interruptions, it is recommended that the ME EQUIPMENT be powered from an uninterruptible power supply or a battery. |
| Power frequency (50/60 Hz) magnetic field<br>IEC 61000-4-8 | 30 (A/m) | 30 (A/m) | Power frequency magnetic fields should be at levels characteristic of a typical location in a typical commercial or hospital environment. |

**Table 7: Guidance and Manufacturer's Declaration—Electromagnetic Immunity**

| IMMUNITY test | IEC 60601 TEST LEVEL | Compliance level | Electromagnetic environment – guidance |
|---|---|---|---|
| Conducted RF<br>IEC 61000-4-6<br><br>Radiated RF<br>IEC 61000-4-3 | 6 Vrms<br>0,15 MHz – 80 MHz<br>6 Vrms in ISM bands between 0,15 MHz and<br>80 MHz<br>80 % AM at 1 kHz<br><br>10V/m, 80MHz to 2.7GHz, 80% AM at 1kHz | 6 Vrms<br>0,15 MHz – 80 MHz<br>6 Vrms in ISM bands between 0,15 MHz and<br>80 MHz<br>80 % AM at 1 kHz<br><br>10V/m, 80MHz to 2.7GHz, 80% AM at 1kHz | Portable and mobile RF communications equipment should be used no closer to any part of the [ME EQUIPMENT including cables, than the recommended separation distance calculated from the equation applicable to the frequency of the transmitter.<br>Recommended separation distance:<br>$d = [\frac{3,5}{V_1}]\sqrt{P}$<br>$d = [\frac{12}{V_2}]\sqrt{P}$<br>$d = [\frac{12}{E_1}]\sqrt{P}$ 80 MHz to 800 MHz<br>$d = [\frac{23}{E_1}]\sqrt{P}$ 800 MHz to 2,5 GHz<br>where P is the maximum output power rating of the transmitter in watts (W) according to the transmitter manufacturer and d is the recommended separation distance in meters (m).<br>Field strengths from fixed RF transmitters, as determined by an electromagnetic site survey, should be less than the compliance level in each frequency range.<br>D Interference may occur in the vicinity of equipment marked with the following symbol: |
| Proximity magnetic fields<br>IEC 61000-4-39 | 8 A/m<br>(30 kHz, CW)<br>65 A/m<br>(134.2 kHz, pulse modulation 2.1 kHz)<br><br>7.5 A/m<br>(13.56 MHz, pulse modulation 50 kHz) | 8 A/m<br>(30 kHz, CW)<br>65 A/m<br>(134.2 kHz, pulse modulation 2.1 kHz)<br><br>7.5 A/m<br>(13.56 MHz, pulse modulation 50 kHz) | ME EQUIPMENT containing magnetically sensitive components or circuitry where a separation distance of those components or circuitry of at least 0,15 m from the field sources specified in table below is ensured by the ENCLOSURE or by the physical design of an attached ACCESSORY during INTENDED USE need not be evaluated further for IMMUNITY to proximity magnetic fields in the frequency range 9 kHz to 13,56 MHz. |

**Table 8: Recommended Separation Distances**

The following table details the recommended separation distances between portable and mobile RF communications equipment and NR-314-P NR device.

| Recommended separation distances between portable and mobile RF communications equipment and the [ME EQUIPMENT or ME SYSTEM] | | | | |
|---|---|---|---|---|
| Rated maximum output power of transmitter (W) | Separation distance according to frequency of transmitter (m) | | | |
| | 150 kHz to 80 MHz outside ISM bands<br>$d = [\frac{3,5}{V_1}]\sqrt{P}$ | 150 kHz to 80 MHz in ISM bands<br>$d = [\frac{12}{V_2}]\sqrt{P}$ | 80 MHz to 800 MHz<br>$d = [\frac{12}{E_1}]\sqrt{P}$ | 800 MHz to 2,5 GHz<br>$d = [\frac{23}{E_1}]\sqrt{P}$ |
| 0.01 | 0.12 | 0.2 | 0.4 | 1 |
| 0.1 | 0.37 | 0.64 | 1.3 | 2.6 |
| 1 | 1.17 | 2 | 4 | 8 |
| 10 | 3.7 | 6.4 | 13 | 26 |
| 100 | 11.7 | 20 | 40 | 80 |

| Test specifications for ENCLOSURE PORT IMMUNITY to RF wireless communications equipment | | | | |
|---|---|---|---|---|
| Test frequency (MHz) | Band (MHz) | Service | Modulation | Immunity Test level (V/m) |
| 385 | 380 to 390 | TETRA 400 | Pulse modulation 18 Hz | 27 |
| 450 | 430 to 470 | GMRS 460, FRS 460 | FM ± 5 kHz deviation 1 kHz sine | 28 |
| 710 | 704 to 787 | LTE Band 13, 17 | Pulse modulation 217 Hz | 9 |
| 745 | | | | |
| 780 | | | | |
| 810 | 800 to 960 | GSM 800/900, TETRA 800, iDEN 820, CDMA 850, LTE Band 5 | Pulse modulation 18 Hz | 28 |
| 870 | | | | |
| 930 | | | | |
| 1720 | 1 700 to 1 990 | GSM 1800; CDMA 1900; GSM 1900; DECT; LTE Band 1, 3, 4, 25; UMTS | Pulse modulation 217 Hz | 28 |
| 1845 | | | | |
| 1970 | | | | |
| 2450 | 2 400 to 2 570 | Bluetooth, WLAN, 802.11 b/g/n, RFID 2450, LTE Band 7 | Pulse modulation 217 Hz | 28 |
| 5240 | 5 100 to 5 800 | WLAN 802.11 a/n | Pulse modulation 217 Hz | 9 |
| 5500 | | | | |
| 5785 | | | | |

| Test specifications for ENCLOSURE PORT IMMUNITY to proximity magnetic fields | | |
|---|---|---|
| **Test frequency** | **Modulation** | **Immunity Test Level (A/m)** |
| 30 kHz | CW | 8 |
| 134,2 kHz | Pulse modulation 2.1 kHz | 65 |
| 13,56 MHz | Pulse modulation 50 kHz | 7.5 |

# FCC Information

| | |
|---|---|
| **WARNING** | For patients with a pacemaker, maintain a minimum of 19 mm between the NR device and pacemaker. Turn the NR device off immediately and provide appropriate patient care if you suspect the NR device affected the pacemaker. The Health Industry Manufacturers Association recommends a minimum 19 mm distance between a wireless radio and a pacemaker, which is consistent with the recommendations of Wireless Technology Research. |

Models NR-302, NR-314, NR-314-T, NR-1207, NR-1207-3 and NR-1207-E contains FCC ID: QOQ-BT122.

This device complies with Part 15 of the FCC Rules. Operation is subject to the following conditions:

- This device may not cause harmful interference.
- This device must accept any interference received, including interference that may cause undesired operation.

This equipment has been tested and found to comply with the limits pursuant to Part 15 of the FCC Rules. These limits are designed to provide reasonable protection against harmful interference in a residential installation. This equipment generates, uses and radiates radio frequency energy and, if not installed and used in accordance with the instructions, may cause harmful interference to radio communication. However, there is no guarantee that interference will not occur in a particular installation. If this equipment does cause harmful interference to radio or television reception, which can be determined by turning the equipment off and on, the user is encouraged to try to correct the interference by one or more of the following measures:

- Reorient or relocate the receiving antenna.
- Increase the separation between the equipment and receiver.
- Connect the equipment into an outlet on a circuit different from that to which the receiver is connected.
- Consult the dealer or an experienced radio/TV technician for help.

# ISED Information

Le présent appareil est conforme aux CNR d'Industrie Canada applicables aux appareils radio exempts de licence. L'exploitation est autorisée aux deux conditions suivantes : (1) l'appareil ne doit pas produire de brouillage, et (2) l'utilisateur de l'appareil doit accepter tout brouillage radioélectrique subi, même si le brouillage est susceptible d'en compromettre le fonctionnement.

CAN ICES-003 (B)/NMB-003(B) / CAN ICES-001/NMB-001

Usage Conditions:
Must be used only with the holder or pouch provided by Norav Medical in the package. The device must be used while installed parallel to the patient's body.

Limitations of usage :
Use of the product must be done exactly, as per usage conditions and relevant statements provided by manufacturer. Minimum separation distance between the human body and product must be at least 19mm (including Holder or Pauch).

# Document History

| Version | Date | Updates | Changed by |
|---|---|---|---|
| 1.0 | 01/01/2016 | Initial document | Boris |
| 2.0 | 18/06/2017 | New Logo | Alex |
| 2.1 | 06/07/2017 | Add models to NR device feature matrix table;<br>NR-1207-E and NR-314-T | Boris |
| 2.2 | 24.09.2017 | NR-1207-3 recording modes added | Alex |
| 2.3 | 30.04.2018 | Text corrections | Alex |
| 2.4 | 11.12.2018 | Accessory items list updated | Alex |
| 2.5 | 12.11.2019 | More languages support noted | Alex |
| 2.6 | 25.11.2019 | Norav GmbH new address | Alex |
| 2.7 | 10.11.2020 | General Updates | Michal, Boris |
| 2.8 | 31.05.2021 | Add description for RCM symbol on the label | Boris |
| 2.9 | 31.08.2022 | Add Part Number to the table in page 30 | Michal Yeger |
| 3.0 | 02.07.2023 | Added NR-314-P model | Alex |
| 3.1 | 25.10.2023 | Headings update and unification (including ToC update), cover image added | Anton Borniakov |
| 3.2 | 27.12.2023 | Updated NR-314-P accessories part numbers, minor text updates | Anton Borniakov |
| 3.3 | 28.10.2024 | Add ISED information | Boris.W |