USER GUIDE

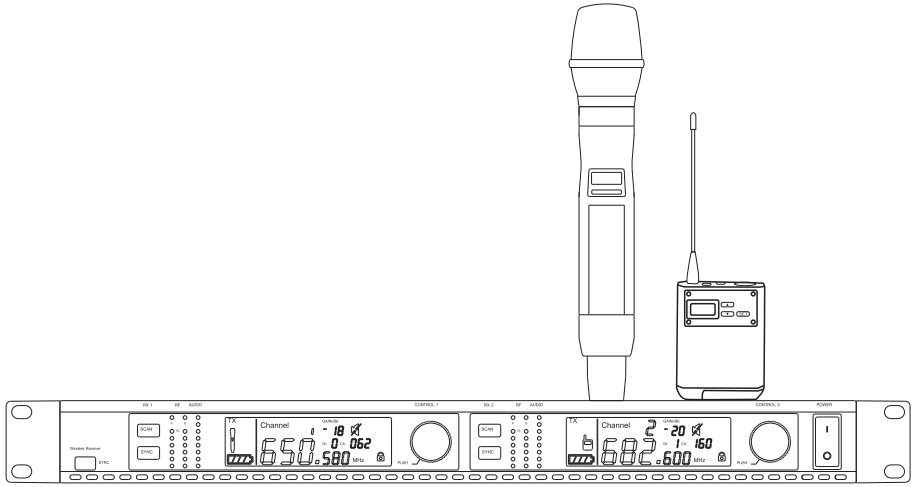

English

Products in kind prevail

Warning:
Changes or modifications to this unit not expressly approved by the party responsible for compliance could void the user ' s authority to operate the equipment.

NOTE:
This device complies with part 15 of the FCC Rules. Operation is subject to the following two conditions: (1) This device may not cause harmful interference, and (2) this device must accept any interference received, including interference that may cause undesired operation.

FCC Statement:
This equipment has been tested and found to comply with the limits for a Class B digital device, pursuant to part 15 of the FCC Rules. These limits are designed to provide reasonable protection against harmful interference in a residential installation. This equipment generates, uses and can radiate radio frequency energy and, if not installed and used in accordance with the instructions, may cause harmful interference to radio communications. However, there is no guarantee that interference will not occur in a particular installation. If this equipment does cause harmful interference to radio or television reception, which can be determined by turning the equipment off and on, the user is encouraged to try to correct the interference by one or more of the following measures:
—Reorient or relocate the receiving antenna.
—Increase the separation between the equipment and receiver.
—Connect the equipment into an outlet on a circuit different from that to which the receiver is connected.
—Consult the dealer or an experienced radio/TV technician for help.

RF exposure compliance statement:
This device has been evaluated to meet the general RF exposure requirement

Technical specifications

System parameter:

Carrier frequency:	UHF657.25~662.75MHz
Modulation mode:	FM
Bandwidth:	50MHz
Channel:	2×200 channel ±0.005%
Frequency stability:	＞105dB
Dynamic range:	
Maximum modulation: .	±68KHz
Harmonic distortion:	≤5%
Frequency response:	100Hz－ 2KHz
False interference ratio:	80dB
Signal-to-noise ratio:	＞55dB
Operating temperature:	－10℃ —＋40℃

Receiver

Power source:	DC15V/500mA
Power consumption:	3W
Receiver sensitivity:	dB mu V (80dB S/N)
Audio output: Mixed output:	0-200mV,
Balanced output:	0-400mV,

Transmitter

Emission power: maximum: 25mW ; minimum: 15mW

WBattery: 3V (1.5V Aa× 2)

Continuous use time: High:-> 10 hours

LOW: > 15 hours

Troubleshooting

problem	See solution
There is no sound	Power supply ,cable or radio frequency
A weak or distorted sound	Gain ,cable ,reduce interference or radio frequency
Working distance is too short ,sudden noise or signal frequency loss	Radio frequency
Unable to turn off the transmitter or change the frequency settings ,or unable to program for the receiver	Interface locking

Power Supply

Ensure that the receiver and transmitter use sufficient voltage. Test battery indicator. Please replace the battery or charge it.

gain

The front of the receiver adjusts the system gain. It corresponds to the input of mixing panel, amplifier or processor.

Cable

Make sure all cables and connectors are fully engaged or locked in place, Check whether the cable is damaged. If necessary, please replace it.

Interface locking

Transmitters and receivers can be locked to prevent accidental or unauthorized changes. When accessing the lock controller, the lock icon on the display screen. Unlock the receiver or transmitter according to instructions.

Radio Frequency (RF)

The RF green light lights up when the linked transmitter is within the range of the receiver. Measure transmitter range before performance to avoid operating beyond specified transmitter range.

The RF meter bar indicates the received RF power, Signals may be received from receivers or from interference sources such as television broadcasting. If the signal level is displayed on the meter when the transmitter is off, there may be interference in the channel, Check whether there are interference sources in the area around the fender or change the receiver to clear frequency.

Red display, weak reception. Green display, strong reception.

Frequency compatibility

- Perform "scan" and "synchronization" operations to ensure that transmitters and receivers are set to the same channel or frequency.
- Check tags on transmitters and receivers to ensure they use the same band.

Reducing interference

- Perform a scan to find the optimal idle frequency. Perform IR synchronization to transfer settings to the transmitter.
- If there are multiple systems, make sure that each receiver is assigned to a unique channel. If two transmitters are set to phase The same channel will cause interference.
- It should be ensured that there are no obstacles in the line of sight between the transmitter and the receiver.
- Keep the receiver antenna away from metal objects or other radio frequency interference sources (such as CD players, computers, digital effects, network switches, wires and personal stereo monitors (PSM) and other wireless systems).
- Eliminate excessive RF signal (see below).

Increase the scope

- Increase transmitter RF power level to Hi.
- Increase the radio frequency range by using an active directional antenna, an antenna distribution system, or other antenna accessories

Eliminating Radio Frequency Overpower

If the radio frequency 0L icon appears on the radio frequency scale, please try the following operation.

- Reduce transmitter RF power level from Hi to Lo.
- Move the transmitter to a position at least 6m(20in) from the receiver.
- If active antenna is used, the gain of antenna or amplifier should be reduced.
- Using omnidirectional antenna.

Receiver Display Screen

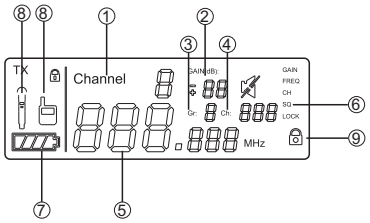

① **1.2 channel indication**

② **Volume gain of receiver**
Adjustable by knob

③ **Receiver Frequency Marshalling Display**

④ **Receiver channel display**

⑤ **Receiver Frequency Display**

⑥ **Receiver audio quality display**

⑦ **Transmitter power display**
When the remaining grid is left, the power symbol will flicker.

⑧ **Display of transmitter type**
Hand held, Purse

⑨ **Lock-up Display of Receiver**

Receiver operation instructions

Receiver Frequency Selection

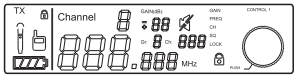

SCAN

Channel search button

SYNC

Channel frequency key

①. Gain volume adjustment:

Press the knob once, gain will flash, the knob will turn left, the volume will decrease, the knob will turn right, the volume will increase. The volume is 1-31 in total. Press down the knob again to confirm the volume.

②. Freq / CH frequency / Channel Regulation:

Press the knob twice, freq / CH flashes, the left frequency of the knob decreases, and the right frequency of the knob increases. A total of 100 frequency points can be selected. Press the knob down again to confirm the frequency / channel.

③. SQ regulation:

Press the knob three times, SQ will flash, SQ to the left will increase and sq to the right will decrease. There are four gears available. Press the knob down again to confirm.

④. Key adjustment:

Press the knob four times, the lock will flash, the knob will unlock the left off channel, and the knob will lock the right on channel. Press down the knob again to confirm the lock key operation.

Transmitter operation instructions

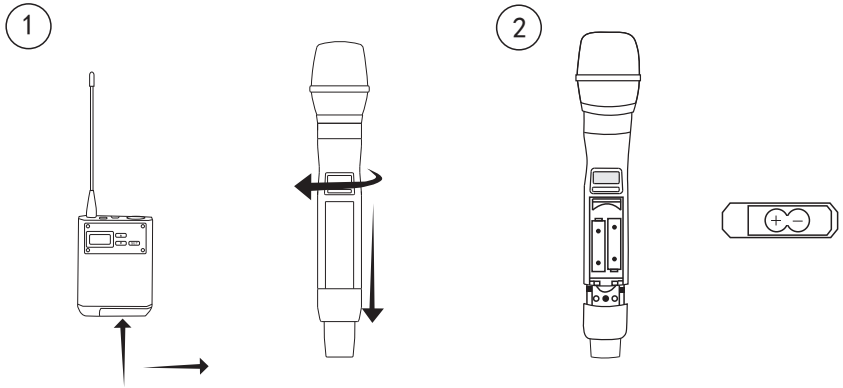

① **Open the battery compartment**
As shown in the figure, press down radially and push right again, or turn down the handheld tube to the right to open the battery bin

② **Install batteries**
AA Battery: As shown, load the battery (pay attention to polarity marking)

① **Battery indicator lamp**
Number of cells displayed

② **Home screen display: Frequency / channel indication**

③ **Increased transmitting power**

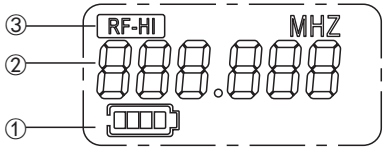

Waistbag Display Screen

Handheld Display Screen

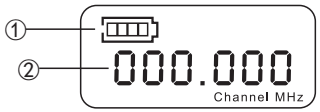

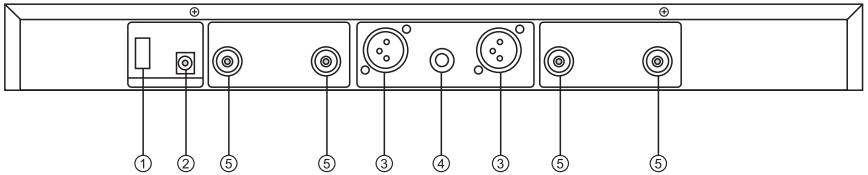

① **Elimination of Strain in Power Wire**
Fix the power cord

② **Power jack**
DC Power Connection Point

③ **XLR audio output**
Balanced (1: Grounding, 2: Audio +, 3: Audio-)

④ **1/4 "Instrument Auxiliary Equipment Output**
Impedance balanced (tip: audio, ring: no audio, sleeve: grounding)

⑤ **Antenna Connector**
Receiver Antenna BNC Connector Port

Transmitter

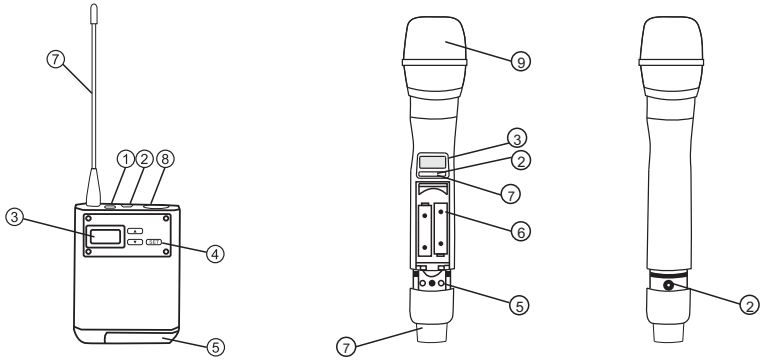

① **IR Frequency to Frequency Window**

② **Open/close switch**
Turn on or off the transmitter

③ **Display screen**
View menus and settings

④ **Menu navigation buttons**
SET : Menu Selection Key
▲▼ : Used for parameter modification
▭ : Manual menu navigation button, press down the selection to set the corresponding menu, and then change the parameters by dialing up and down

⑤ **Battery cover**

⑥ **Battery bin**
Turn on or off the transmitter

⑦ **Waistband antenna**

⑧ **Waist pocket input socket**
Used to connect microphone instrument wires

⑨ **Hand held pickup**

Step 3: IR synchronization for Creating Audio Channels

1. Turn on the transmitter

2.Keep the distance between transmitter and receiver less than 15 cm (6 inches) and align the IR synchronization window. Align transmitter and receiver and press sync button to synchronize

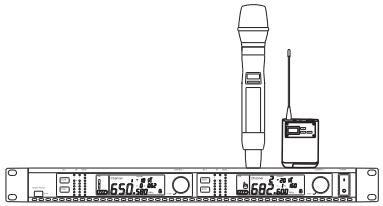

< 15 cm (6 in.)

3.When sync is completed, the transmitter information at the bottom of the display screen will be read out.

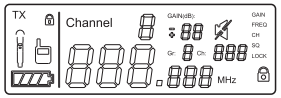

Receiver front panel and rear panel

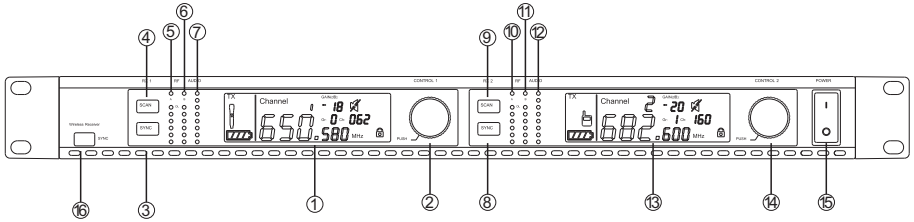

① **Channel 1Display screen**
Display Receiver and Transmitter Settings

② **1 channel setting button**
Press this button to change 1 channel menu parameters

③ **Channel 1 search button**
Press this button to synchronize the transmitter frequency window with the host frequency window

④ **1 Channel Frequency Keyboard**
Press this button to synchronize the transmitter frequency window with the host frequency window

⑤ **11 Channel B Antenna Signal Indicator**

Blue: When the green light is more than 3 lights,it means that the current reception quality is good, and the blue light is on
Red: When the green light is more than 2 lights,it means that the reception quality is weak and the red light is on.
Green (signal strength indicator)

⑥ **1 Channel A Antenna Signal Indicator is the same as ⑤ Channel A Antenna Signal Indicator**

⑦ **1 Channel Volume Gain Display**

Red (distortion indicator)
Yellow (Volume Saturation Indicator)
Green (Volume Gain Indicator)

⑧ **2 Channel Frequency Keyboard**
Press this button to synchronize the transmitter frequency window with the host frequency window

⑨ **Channel 1 search button**
Press this button to synchronize the transmitter frequency window with the host frequency window

⑩ **2 Channel A Antenna Signal Indicator is the same as ⑤ Channel A Antenna Signal Indicator**

⑪ **2 Channel B Antenna Signal Indicator is the same as ⑤ Channel B Antenna Signal Indicator**

⑫ **Channel 2 volume indicator is the same ⑦**

⑬ **Channel 1Display screen**
Display Receiver and Transmitter Settings

⑭ **2 channel setting button**
Press this button to change 2 channel menu parameters

⑮ **Receiver power switch**

⑯ **Receiver Frequency-to-Frequency Window**

System components

①

②

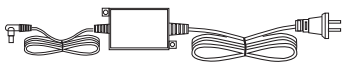

③

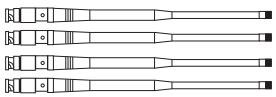

①Receiver
②Power supply
③1/2 wavelength antenna (4)

④

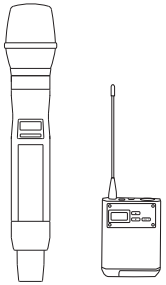

④Waist-bag transmitter or hand-held transmitter (one of two choices)

QUICK GET START

Step 1: Power supply and antenna connection

① Connect the antenna to each antenna connector.
② Connect the power adapter to the receiver and insert the power cord plug into the AC power supply.
③ Connect the audio output of the receiver to the mixer or power amplifier.
④ Press the power button and turn on the receiver.

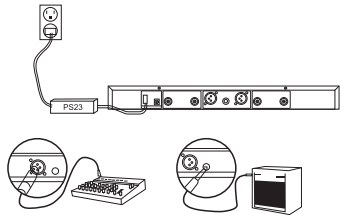

Step 2: load the battery into the transmitter.

①

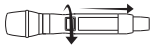

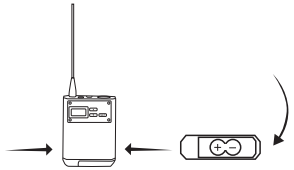

② AA Batteries

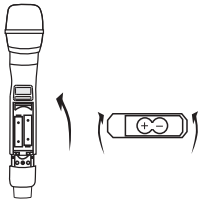

① Open the battery compartment
As shown in the figure, press the side pull ring of the waistpack or unscrew the lid on the portable device to touch the battery compartment.

② Install batteries
AA batteries: As shown, load batteries (note polarity marking) and AA adapters

Important safety matters

1 must read these notes
2 these considerations must be retained.
3 all warnings must be noted
4 must follow all precautions
5 do not use this device near the water.
6 can only use dry cloth wipe equipment
7 don't block any vent. Set aside enough distance to ensure adequate ventilation and to be installed in the position of the manufacturer.
8 do not install the device in any heat source (such as fire, radiator, thermostat, or stove comprises a power amplifier in the vicinity of other possible heat generating device can be. Do not place any open fire on the product.
9 Do not destroy the safety function of the plug with polarity or grounding type. The polarity plug has two inserts, which are wider than the other. Grounding type plug with two insert and third grounding pin. Wide insert or third pins are arranged for security purposes. If the plug can not be inserted into your socket, please consult the electrician how to replace the appropriate socket.
10 power line protection to prevent foot tread or clamped, especially in the cited the source plug, socket and power line of the fuselage is convenient.
11 can only be used by the manufacturer to specify the connection parts /accessories
12 can only be used by manufacturers designated or with the equipment sold trolleys, supports, tripod, bracket or support platform. If you use a trolley, you should pay attention to the safety of the trolley when moving equipment.

13 in the case of lightning weather or long time not use, unplug the equipment plug.
14 all maintenance shall be performed by qualified maintenance personnel. If the equipment from damage, maintenance should be carried out: power line or plug is damaged, liquid splashes into the device or a foreign body into the equipment, equipment can not be exposed in the rain or humid environment, or fall to the ground.
15 do not exposure of this device in place may drip and splash. Do not place a container containing liquid (such as a vase, etc) on top of the device.
16 the power plug or electrical connector shall be maintained at any time.
17 the air noise of the device is not more than 70dB (A).
18 the equipment shall be connected to the main power supply with a grounding protection device. 19 in order to reduce the risk of fire or electric shock, do not expose the equipment in the rain or wet environment.
20 do not try to refit this product. Otherwise it may result in personal injury and / or product failure.
21 the product should be operated within the specified temperature range.

This symbol indicates that there is a dangerous voltage which may cause an electric shock.

This symbol indicates that there are important operating and maintenance instructions in the instruction manual attached to the equipment

WARNING: battery replacement may cause explosive hazard

Catalog

① Important safety matters 1

② System Components 2

③ Receiver instructions 3

④ Instructions for transmitters 4

⑤ Instructions for Receiver Operation 6

⑥ Troubleshooting 7

⑦ Parameters 8