Air heater KW 2.0 5.0 8.0 Manual

Tips:

1). The fuel pipe should be 1.5 meter - 2 meters.
2). The voltage would be better, if 11.5V - 12.8 volts.

Introduction

Application field of Air heater

The air heater is not affected by the engine ,and it is supplied for the following vehicles with corresponding power.

- All kinds of auto and trailers.
- Construction machinery
- Agricultural machinery
- Boat, ship,yacht
- Caravan

Function

- Warm-up defrost glass
- Heat and keep warm for the followed area:

  ---Driving cab,cabin

  ---Cargo hold

  ---Interior of staff carrier

  ---Caravan

The heater can not be used on followed place and situation

- Constant heating for long time:

  ---Living room,garage

  ---Residential purpose boat

- Heat and dry:

  ---Life(people,animal),blowing hot air directly

  ---Articles and objects

  --- Blow hot air to container

Heater Safety instruction of installation and operation

- **Installation**

Prevent the substances around heater from being damaged and influenced by high temperature.

- **Exhaust emission system**

When put the exhaust vent, prevent the exhaust entering the heating space through ventilator,hot air inlet and window.Keep the exhaust pipe clear. The exhaust pipe outlet shall be kept away from anything flammable, and avoid heating and igniting the flammable goods and loading cargo on the ground.

- **The air inlet of combustion - supporting air**

The combustion-supporting air which is used for heater burning shall not be inhaled from passenger compartment The air inlet shall not be blocked,and keep the inlet open and clear.f the air inlet equipped with filter, keep the filter clean regularly.

- **The heating air inlet**

The heater air shall be composed by fresh air or circulating air, which is inhaled from clean area.The air inlet pipe shall be protected by safety fence or other suitable tools,and keep the pipe clear and open.

- **The heating air outlet**

In order to prevent the people and goods from being damaged,the hot air pipe shall be installed in the place where it could not be access to easily.

Safety instruction

• Following measures shall not be adopted

--Change the important component of heater

---Make use of the spare parts from other manufacturers without permission

---Disobey the instruction and guide during installation or operation

• Only allow using original attachment and spare parts during installation and maintenance

• The heaters shall not be use din the places where may form flammable vapor or dust,for example:

---Fuel depot

---Carbon storehouse

---Timber storehouse

---Granary and similar sites

---Diesel/petrol station

• The heaters shall be turned off when fill fuel

• If the fuel leak or discharge from the fuel system of heaters,please contact with the service provider to repair

• In the process of work, it is forbidden to cut off the electric power directly to stop the heater working

Product

Survey

KW2.0 Air heater(hereinafter referred to as the heater) is independent to the original engine system,it makes use of 12V or 24V direct current to drive. There are two kinds of control mode of the heater:Automatic control mode and Manual control mode. The heater adopts light diesel and gasoline which corresponds to the environmental temperature as fuel,and it can be started and operated normally at the temperature of above -40Ṇ . The inhaled fresh air is heated to hot air through heater changer by the energy which comes from fuel burning, then blown to where it is needed.This type of heater owns the advantage of compact structure,light weight, high thermal efficiency, economize on electricity and fuel, easy installation.

Technical specification

Power ZWH	2000	5000	8000
Heating medium	Air		
Fuel	Diesel		
Fuel consumption Zl/hH	0.12-0.24	0.18-0.48	0.21-0.54
Rated voltage ZVH	12V/24V		
Working temperature ZṆH	-50ṆÍ 45Ṇ		
Weight ZKGH	3.6	5.2	5.2
Dimension ZmmH	320×125×157	380×145×177	380×145×177

Structural principle

After the heater starts,the glow plug comes into operation,the magnetic pump begins to supply fuel,combustion-supporting fan inhales combustion-supporting air from outside of car. The fuel generates the heat by burning in combustion chamber, which is taken by aluminum heater changer.The inner air pushed by the heat exchange fan brings heat to where it is needed through the surface of heater changer. And the combustion emissionis discharged through exhaust pipe.

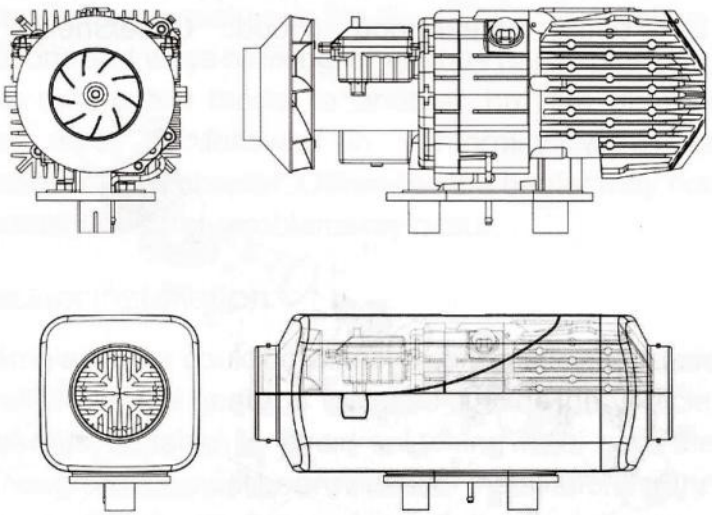

The structure of hood-shape case

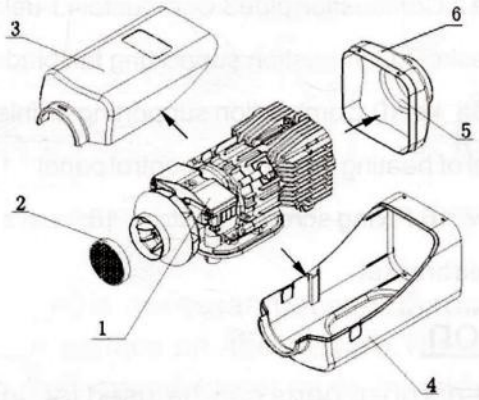

1-Main engine; 2-Suction hood; 3-Upper hood; 4-Bottom-hood; 5-Air outlet; 6-Rear hood {Hood: Case/Shelly}

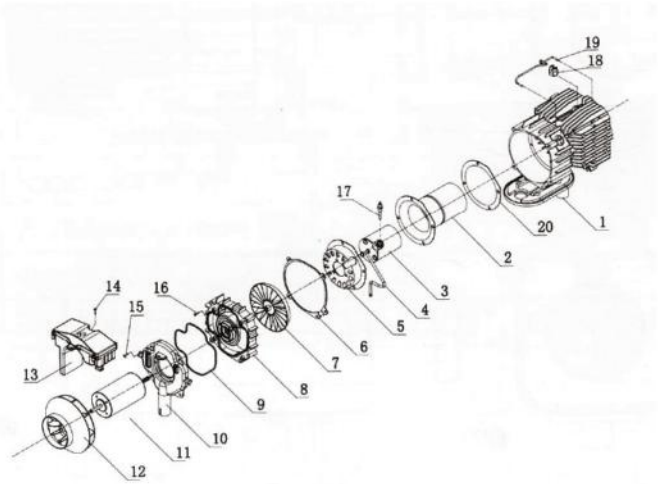

1.Exhaust tube 2.Combustion pipe3.Combustor4.Fuel tube 5. Air inlet distributer 6.Gasket 7.Combustion supporting fan blades 8.Bracket of fan motor 9.Gasket10.Combustion supporting airinlet 11.Fan motor 12. Blade wheel of heating fan13.Main control panel 14. Fixing screw 15.Fixing screw 16.Fixing screw 17.ignitor 18.heat sensor 19.Sensor Fixed bracket

Installation

Only special-purpose parts can be used for installation of the heater. Following picture is the diagram for installation.The positions and ways of fixing of various parts may vary from one automobile model to another, but the general principles must be followed in conformity with the requirements of this chapter. Otherwise the heater may notwork normally or safety problems my occur.

Main heater installation

The main heater could be installed both inside and outside of the vehicle. If the heater is installed outside the vehicle, measures must be taken to avoid splashing water onto the heater. Enough space must be provided for installation for the convenience of heating air flow and installation,maintenance of the main heater.

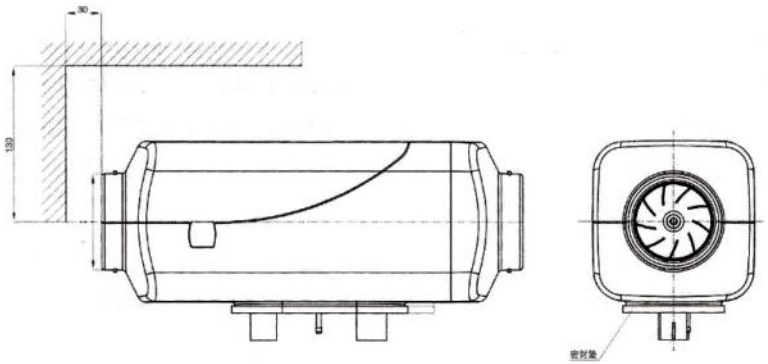

Good sealing is necessary between the main heater and the installation surface on the vehicle. The special gasket supplied by the manufacturer must inserted in.And the installation surface must be even.Its parts at the installation

bases of the main heater should have uneveness less than 1mm. After drilling installation holes, eveness must be improved according to this requirement. At installation. Please rotate the four M6 nuts tight, which are provided by the manufacturer.

For re-installation of the main heater,a new gasket must be used to replace the old one.

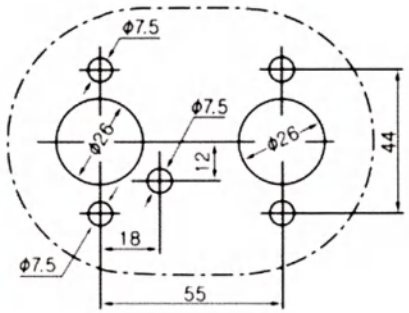

Attention must be paid to that the inclination angle shall not exceed the limit, or normal operation will be affected.Direction for installation of the main heater is shown in the following picture.

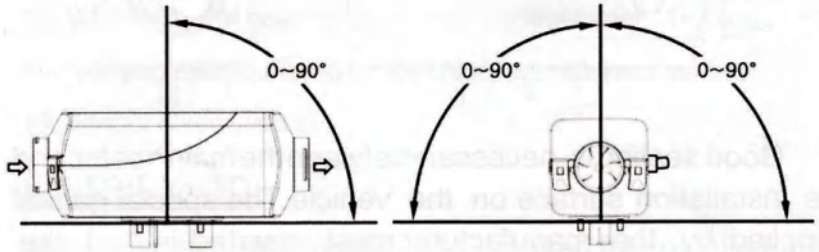

After installation of the main heater,please check and make sure that there is no contact or friction between the blade wheel of fan and other nearby parts to avoid unsmooth operation.

Installation of Air Heating System

The air heating system of the heater should not be connected with the air channel of the vehicle. Either independent outer circulation or inner circulation mode can be adopted.

When an external heating air tube is attached to the heater,the tube diameter should not be smaller than 85mm.Its material should be capable to resist temperature of 130ÑÊ
The maximum pressure drop between the air inlet side and outlet side of the air heating system should not be higher than0.15kPa.

The hot air from the heating system should noterupton to such parts which are unable to resist heat.In passenger vehicles,the hot air vent should not be blocked by passengers. A self-provided protective net can be installed if necessary.
For heater working in external circulation mode,the position of air inlet port should be proper to guaranteed that under normal operation no splash of water can be sucked into the heater the no exhaust from the engine can be sucked in.

For heater working in internal circulation,measures should be taken to avoid re-entering of the supplied hot air into the air inlet port.If no air inlet tube is attached in this mode ,an air in let hood with grids must be installed at the air inlet port of the main heater, The inlet air should be drawn from the cold area of the compartment,such as under the seats or berths.

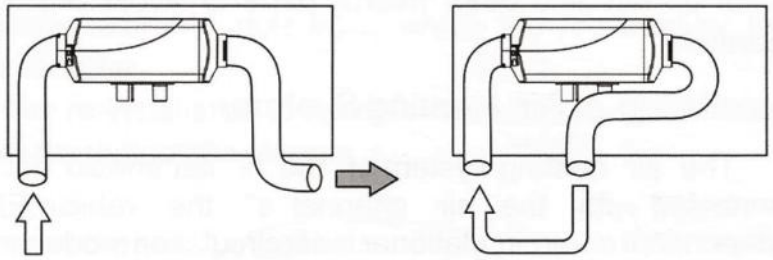

a) √ b) ×

Installation of Fuel Supply System

Fuel for the heater can be supplied from the fuel tank of the vehicle or an additional independent fuel tank. It is not allowed to install the fuel tank in the cab or passenger compartment or any region that is possibly to cause fire if an independent fuel tank is used.

The elevation difference between the heater and fuel pump, and between the fuel pump and the fuel pump produces pressure from fuel to the fuel pump.The inner diameter and length of the fuel tube is related to the resistance of the fuel route.Please consider such factors for installation.

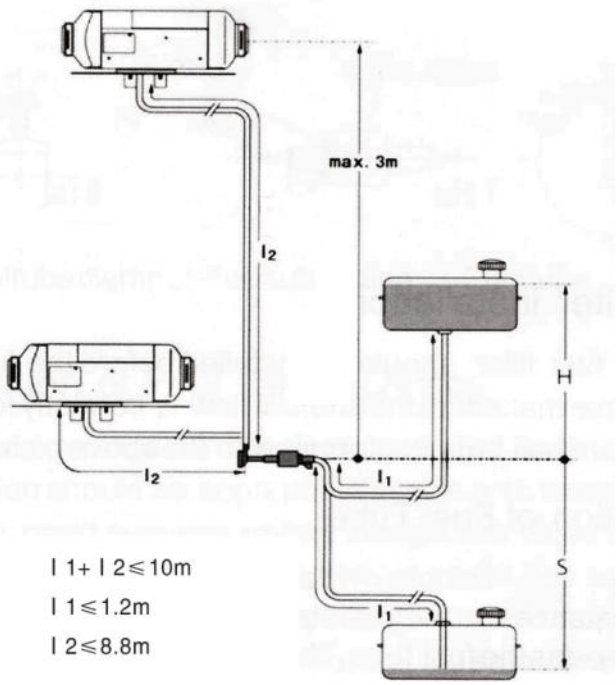

Fuel pump installation

The fuel pump should be installed in places that can avoid heat radiant from the vehicle parts that can emit heat and in places with cool air .Its ambient temperature should not exceed 20N. Directions of installation of the fuel pump are shown in the following picture. When installing the fuel pump, please use the fuel pump holder supplied with the heater to hold the pump tight. The pump is fixed with the shock-reducing tightening piece.

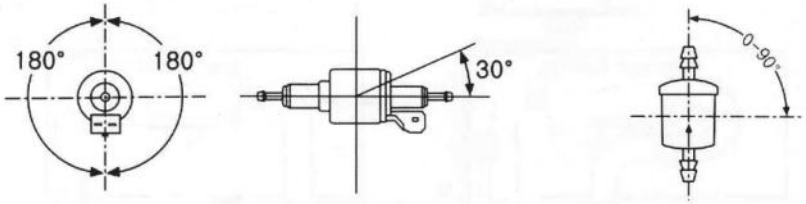

Fuel Filter installation

The fuel filter should be installed before the fuel inlet port.Please make sure that the fuel flow is correctly followed. Its position shall be in conformity with the above picture.

Installation of Fuel Tube

Only the flexible nylon tube, which has good light-resistance and thermal stability,supplied with the heater can be used as the fuel tube.The inner diameter of the tube is Ï 2mm.

The position of fuel tube should be against flying stones and be away from any heat emitting parts of the vehicle.Protective device can bin stalled if necessary.

The fuel tube from the fuel pump to the main heater should be in any directions other than down ward direction.The fuel tube shall be tied in some proper location to make it fixed. The distance between twoties shall be less than 50cm.

The fuel tube fittings supplied with the heater should be used for connections between fuel tube and fuel pump,fuel tube and heater,fuel tube and sucking tube of fuel tank and fuel tube and reducing T.The fuel tube should tie with fuel tube clamps. Bubbles should be eliminated from the connecting places.

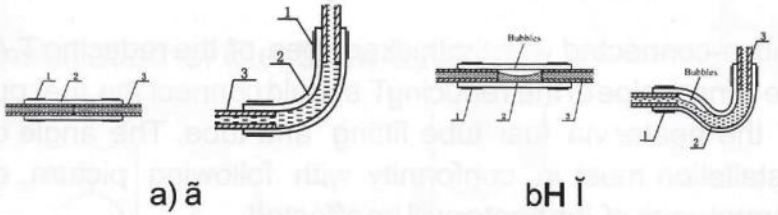

1-Fueltubeclamp;2-Fueltubefitting; 3-Fueltube

Installation of Fuel Taking Device

The openings on the fuel tank (or tank cover) for installation should be appropriate in size, with trimmed brim and with good eveness around the opening.Good sealing is necessary for the base of the fuel taking tube.The bottom end of the fuel taking tube should be 30mm-40mmfromthe bottom of fuel tank to suck enough fuel and at the same time to avoid sucking in impurities sediment on the bottom of fuel tank.

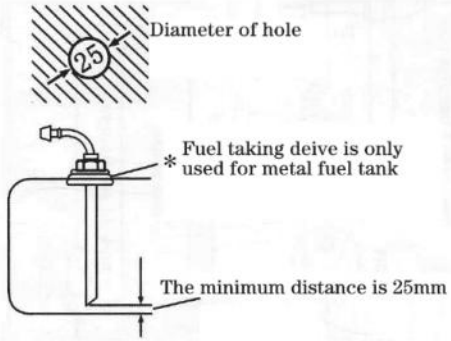

If fuel is taken from the fuel pipe to the engine,the fuel pipe from the fuel tank to the fuel filter should be disconnected

and re-connected with the thicker pipes of the reducing T. And the thinner pipe of the reducing T should connect the fuel pump of the heater via fuel tube fitting and tube. The angle of installation must in conformity with following picture, or normal work of the heater will be affected.

After installation, the vehicle engine shall be started and then turned off after one minute ô s work to eliminate air trapped in the fuel sucking pipe.

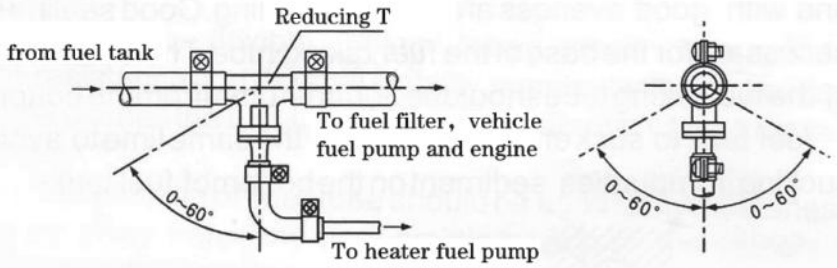

Installation of Electrical System

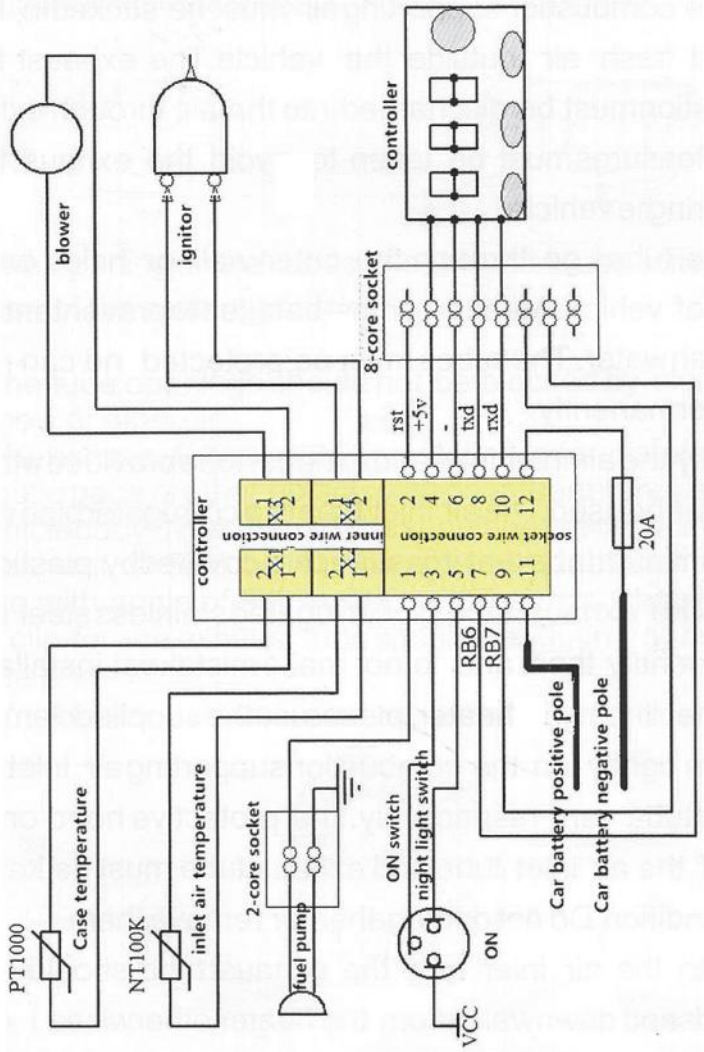

Installation of Combustion Supporting Air Sucking Tube and Exhaust Discharge Tube

The combustion supporting air must be sucked in from external fresh air outside the vehicle.The exhaust from combustion must be discharged into the air through exhaust tube. Measures must be taken to avoid the exhaust from re-entering he vehicle.

The tubes go through the outer wall or holes on the bottom of vehicle.Measures must be taken to prevent entering of splash water. The tubes must be protected and can resist shock permanently.

Only the air inlet tube and exhaust tube provided with the heater can be used.The air inlet tube is a corrugated pipe made of a aluminum tube that it ôs surface is covered by plastic and paper: The exhaust tube is corrugated stainless steel tube.Please identify them and do not make mistake st installation.To connect them with heater, please use the supplied clamps to fix them tightly on the combustion supporting air inlet and exhaust tube vent respectively.The protective hood on the vents of the air inlet tube and exhaust tube must be kept in good condition.Do not damage them or remove them.

Both the air inlet tube the exhaust tube should come out wards and down wards from the heater ,other wise a Ï 4mm hole shall be prepare dat the bottom of the tube for discharge of condensation water.If the tube need curve,the radius cannot be Smaller than 50mm.Also,the sum of all curve angles for each tube shall not exceed 270N.

The opening of the tubes should not be opposite to the direction of the running vehicle.

The tube openings should not be blocked by slurry,rain and snow or other dirt.

The exhaust tube should be installed in far distance from the plastic parts or other objects with poor thermal resistance of the vehicle body.The exhaust tube should be properly fixed.The exhaust vent should be downwards,perpendicular to road surface with angle of 90E a 10€.To ensure such an angle,the fixing clip for the exhaust tube should be within 150mm from the tube end.

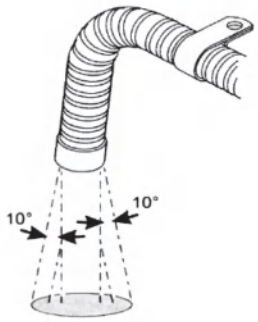

Warning: Violation against the above requirements may cause fire.

If the section of the exhaust tube inside the vehicle may be touched by passenger,a protective cover has to be installed to prevent human contact and scald.

Operation and Control

After the installation, the heater shall be turned on repeatedly fora few times to make the fuel tube full filled , so as to avoid staring failure due to lacking fuel.

Controller

Tips:

seconds.

1) .The fuel pipe should be 1.5 meter - 2meters.

2). The voltage would be better, if 11.5V - 12.8 volts.

Installing picture:

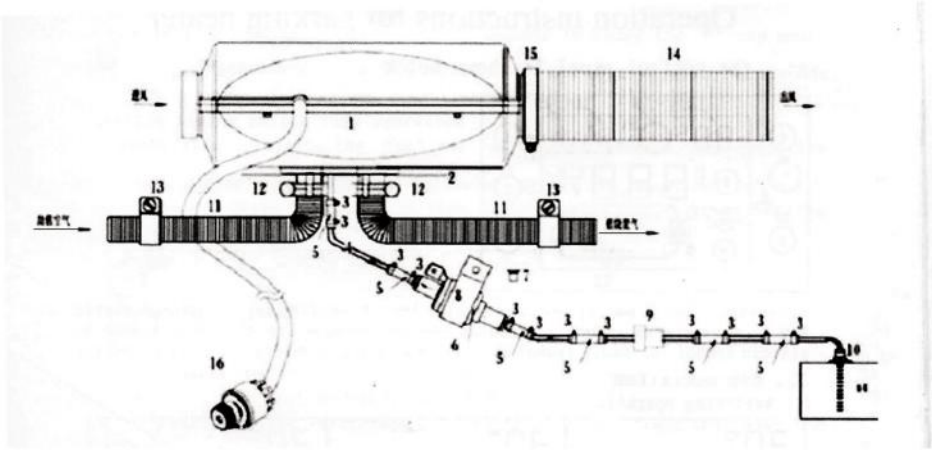

Maintenance

During the running of heater,it tests and checks the operating state and fault in the whole course,and the controller shows fault codes on the LCDI LED constantly.

The fault code of L CD screen

Warnings	1. The fixed backboard shall be sealed and separated from the vehicle sheet metal during installation to avoid the physical injury to the driver when the combustion gas flows in the driving cab from the gap. 2. The exhaust pipe length shall be 30cm at least. 3. The exhaust gas outlet shall be firmly placed in the empty space. 4. The exhaust pipe outlet shall not look at the driving direction.
Recommendations: It is suggested to apply the sealant to block off the installation gap when the heater has been fixed.	

B2010 Operating Manual (230306_V1.2)

Instructions on displays of the panel in the standby mode:		After the power-on initialization is completed, check the panel (press the confirm button, with one time for one of the followings) which displays the followings circularly. **Display of clock → display of ambient temperature → display of power supply voltage → display of gear/temperature** **setting → display of shell temperature → display of the failure code in case of a failure**
Instructions on button operating	Standby mode	Power button: short press to power on, and the panel displays ON.
		Up button: temperature / gear +
		Down button: temperature / gear -
		Confirm button: cyclically switch the displays.
		Setting button: set parameter.
	Power on mode	Power button: long press to power off, and the panel displays OFF.
		Up button: temperature / gear +
		Down button: temperature / gear -
		Confirm button: cyclically switch the displays.
		Setting button: set parameter.
Instructions on remote control code matching	Standby mode	Press the setting button and up button at the same time to enter the remote control code matching interface, and the panel displays -PE-; long press the ON/OFF button on the remote control for code matching. After the code matching is successfully finished, exit automatically or press the power button again to exit; it will automatically exit in case of no press for 20s.
Manual/constant-temperature/automatic start/stop mode switching operation instructions	Standby mode/power on mode	When selecting manual and constant-temperature modes in parameter settings, quick switching can only be performed between manual and constant-temperature modes. When selecting the automatic start/stop mode in the parameter settings, quick switching can only be performed between manual and automatic start/stop modes. The steps to switch between different modes are as follows: 1. Press and hold the up/down key simultaneously to switch between constant-temperature mode or automatic start/stop mode. The interface will display "27 ℃" and flash. Press again to switch to manual mode, and the interface will display "P-01" (default manual mode). 2. When the machine is powered on, press and hold the ON key on the remote controller for 3 seconds to cycle between manual or constant-temperature modes or manual and automatic start/stop modes. Each switch must be separated by more than 3 seconds before switching again.
Instructions on manual oil pumping	Standby mode	Press the setting button and the down button at the same time to enter the manual oil pumping interface which displays the time "020" for example. Press the setting button to set the number, press the up button to add the pumping time, and press the down button to reduce the pumping time (manual range of up to 999 seconds). Short press the confirm button to start/stop pumping, while pressing the power button to exit, or the pumping will automatically exit in case of no press for 20s.
Instructions on parameter setting (Long press the setting button in the standby mode to enter the parameter setting interface)	Clock setting	The initial time display is "00:00" and the first blank flashes. Press the up/down button to set the number. After the clock setting is finished, short press the confirm button to enter the next blank. The subsequent numbers are set in sequence, and short press the setting button to enter the next item.
	Timed start-up setting	The initial time display is "00:00" and the first blank flashes. Press the up/down button to set the number. After the clock setting is finished, short press the confirm button to enter the next blank. The subsequent numbers are set in sequence, and short press the setting button to enter the next item.
	Timed shutdown setting	The initial time display is "00:00" and the first blank flashes. Press the up/down button to set the number. After the clock setting is finished, short press the confirm button to enter the next blank. The subsequent numbers are set in sequence, and short press the setting button to enter the next item.
	Password input	Initially, it displays " - - - - " and the first blank flashes. Press the up/down button to change the number, and then press the confirm button to confirm it to enter the next blank. The subsequent numbers are set in sequence, and finally press the confirm button to enter the next setting when the password is correct.
		The first "P" indicates the manual mode, the first "t" indicates the constant-temperature mode, and the first "A" indicates the automatic start/stop mode, which can be cycled. After setting, briefly press the confirmation key to enter the next parameter.

	Display of P1H2 on the parameter setting interface	It displays " 1" on the second blank for 12V accessories, while "2" for 24V accessories. Press the up/down button to switch to 24V accessories. 12V accessories and 24V accessories can be switched cyclically. After the setting, short press the confirm button to enter the next setting.	
		It displays "H" on the third blank for 5KW, while "L" for 2KW. Press the up/down button to switch to 2KW. 5KW and 2KW can be switched cyclically. After the setting, short press the confirm button to enter the next setting.	
		It displays "2" on the fourth blank for the 22mL pump, "8" for the 28mL pump and " 1" for the 16ML pump. Press the up button to switch to the 28mL pump, while the down button to 16mL pump. The three types can be switched cyclically. After the setting, short press the power button to exit, or the setting will automatically exit in case of no press for 20s.	
	Auto-start temperature setting	Select the automatic start/stop mode, press the power button to enter the startup temperature setting interface, and the initial display is "ON: 25"; Press the up/down key to adjust the flashing position, briefly press the confirmation key to enter the next parameter, set the values in sequence, and then briefly press the power button to exit the setting (range: 15 ℃ - 35 ℃); after returning to the main interface, press the up/down button to modify the automatic shutdown temperature; Note: Automatic shutdown occurs when the ambient temperature is higher than the shutdown temperature; after automatic shutdown, when the ambient temperature is lower than the starting temperature, it will start automatically.	
	Note: After all parameter settings are finished, please press the power button to confirm and save the settings before exiting. No settings will be saved in case of automatic exit after timeout.		
Instructions on screen off	Standby mode	The screen will completely turn off after no press for more than 5 minutes.	
	Power on mode	The screen will turn off after no press for more than 5 minutes If the screen is off, there will be a breathing light prompt and it will display " 🔒 ". Press any button to wake up the screen.	
	Under voltage	E-01	The voltage is too low: for 24V, lower than 18V, and for 12V, lower than 10V.
Instructions on failures and how to deal with them	Over voltage	E-02	The voltage is too high: for 24V, higher than 32V, and for 12V, higher than 17V.
	Spark plug failure	E-03/F1	Short circuit of spark plug
		E-03/F2	Open circuit of spark plug
		E-03/F3	Spark plug abnormality
	Oil pump failure	E-04/F1	Short circuit of oil pump
		E-04/F2	Open circuit of oil pump
	Overheating	E-05	The shell temperature exceeds 260℃. Check whether the air inlet and outlet are blocked.
	Motor failure	E-06/F1	Short circuit of fan
		E-06/F2	Open circuit of fan
		E-06/F3	Fan speed not recognized by Hall sensor
	Disconnection	E-07	Check whether the communication cable or plug between the power button and the controller is open or virtually connected.
	Flame failure	E-08	Check whether there is air or wax blockage in the oil circuit, resulting in poor oil supply.
	Sensor failure	E-09/F1	Short circuit of case temperature sensor
		E-09/F2	Open circuit of case temperature sensor
	Ignition failure	E-10	In case of two times of ignition failure, check the reasons such as blocked oil circuit, not smooth oil intake, stuck oil pump or blocked volatile net due to oil problems.
	Failures in ambient temperature sensors	E-11	Ambient temperature sensors are open or short-circuited.
	Controller overheating	E-12	The temperature of the controller exceeds 100℃. Check whether the air inlet and outlet are blocked, or whether the ECU is damaged.

Quick installation guidance

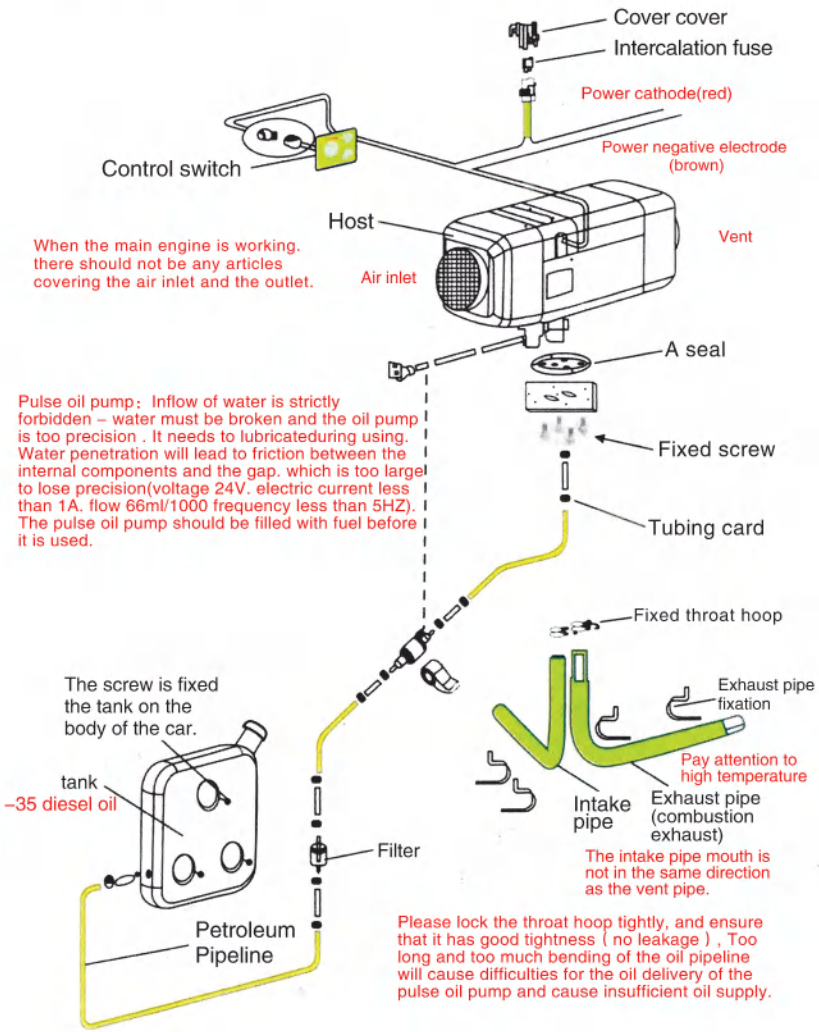

code of use

1.It is prohibited to use in high humidity, conductive dust, f1ammable and explosive gases, dust, materials, corrosive media, strong light, strong magnetic, high voltage and high current equipment nearby.

2.Voltage range of power supply: DC24V controller is suitable for (18-32)V; DC12V controller is suitable for (9-16) V; different voltage cont rollers are not universal, and it is forbidden to use beyond the applicable voltage range.

3.The 5KW controller must be used on the 5KW organism, the 2KW controller must be used on the 2KW organism.

4.If the controller or external device is damaged, it must be replaced by the prototype device and professionals.

5.It is forbidden to open the controller shell privately

6. Equipment must be installed strictly and must be used under safe conditions.

7. The company is not responsible for the loss and liability of the controller due to the misconnection short circuit and damage of the ext ernal devices and lines.

8.At the high temperature of the body, the fan can not operate, so it must be cooled quickly for the body to make its temperature. Cooling air is injected from the combustion inlet to make the body temperature less than 100℃ ,Prevent high temperature from burning parts or causing fire.

* Our company is not responsible for any loss or liability caused by the failure to install and use according to Article 1 to 6.

This device complies with part 15 of the FCC Rules. Operation is subject to the following two conditions: (1) This device may not cause harmful interference, and (2) this device must accept any interference received, including interference that may cause undesired operation.

NOTE: This equipment has been tested and found to comply with the limits for a Class B digital device, pursuant to Part 15 of the FCC Rules. These limits are designed to provide reasonable protection against harmful interference in a residential installation. This equipment generates, uses and can radiate radio frequency energy and, if not installed and used in accordance with the instructions, may cause harmful interference to radio communications. However, there is no guarantee that interference will not occur in a particular installation. If this equipment does cause harmful interference to radio or television reception, which can be determined by turning the equipment off and on, the user is encouraged to try to correct the interference by one or more of the following measures:

-- Reorient or relocate the receiving antenna.

-- Increase the separation between the equipment and receiver.

-- Connect the equipment into an outlet on a circuit different from that to which the receiver is connected.

-- Consult the dealer or an experienced radio/TV technician for help.

Changes or modifications not expressly approved by the party responsible for compliance could void the user's authority to operate the equipment.

The device has been evaluated to meet general RF exposure requirement. The device can be used in portable exposure condition without restriction.