GGS-001390-001
July 2023

PF54A0-mb480-85

RADIO FREQUENCY PLANNING

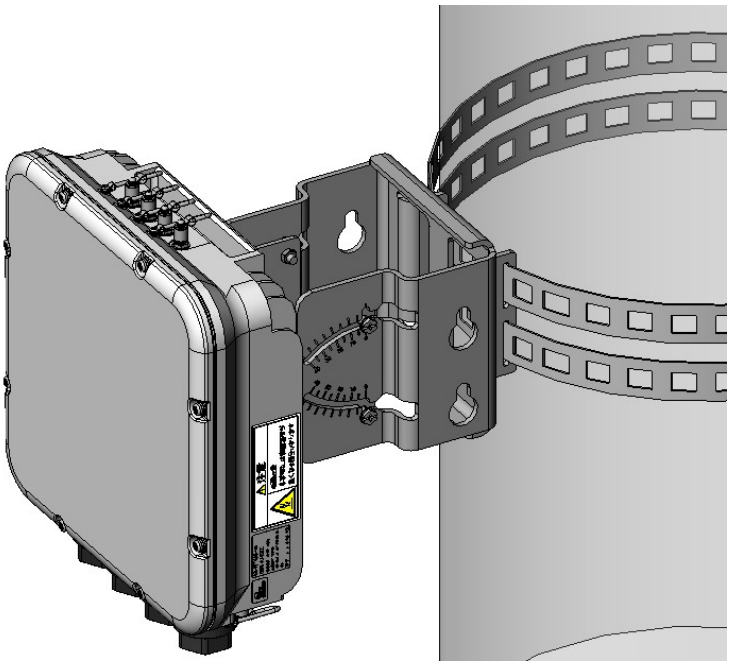

NEC Platforms, Ltd.

GGS-001390-001

© 2023 by NEC Platforms, Ltd.

GGS-001390-001

Printed in Japan

O-RU

RADIO FREQUENCY PLANNING

Table of contents

1. Overview
1.1 Frequency Band
2. Radio Frequency Planning
2.1 Center Frequency for Each Signal Bandwidth, and Frequency Range
2.1.1 3.55 to 3.7 GHz Band

This page is intentionally left blank.

1.Overview

1.1 Frequency Band

O-RU frequency band (RF frequency band) and its appearance are shown below.

O-RU	Applicable Frequency Bands (GHz)	
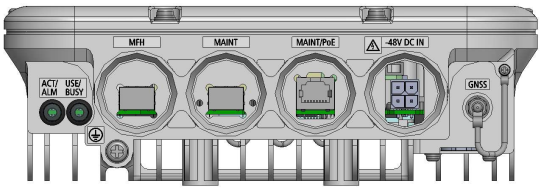	Internal antenna type PF54A0-mb480-85	3.55 to 3.7 GHz

NOTE: Do not disassemble O-RU.

This page is intentionally left blank.

2.Radio Frequency Planning

2.1 Center Frequency for Each Signal Bandwidth, and Frequency Range

2.1.1 3.55 to 3.7 GHz Band

Signal	Frequency Range		Remark
	Center frequency	Frequency range	
40MHz	3570.000 MHz	3550.905 MHz to 3589.065 MHz	
	3624.990 MHz	3605.895 MHz to 3644.055 MHz	
	3680.010 MHz	3660.915 MHz to 3699.075 MHz	

NOTE: Frequency Range Without Guard Band

This page is intentionally left blank.