OTA TEST REPORT

Applicant	Shanghai Xin an Information and Technology Co. Ltd.
Product	Mtag
Model	Mtag
Report No.	R2406A0747-T1
Issue Date	August 9, 2024

Eurofins TA Technology (Shanghai) Co., Ltd. tested the above equipment in accordance with the requirements in **ANSI/IEEE Std 149-2021.** The test results show that the equipment tested is capable of demonstrating compliance with the requirements as documented in this report.

Wei Fang ying　　Fan Guangchang

Prepared by: Wei Fangying　　*Approved by: Fan Guangchang*

Eurofins TA Technology (Shanghai) Co., Ltd.

Building 3, No.145, Jintang Rd, Pudong Shanghai, P.R.China
TEL: +86-021-50791141/2/3
FAX: +86-021-50791141/2/3-8000

TABLE OF CONTENTS

1. Test Laboratory 3
1.1. Notes of the Test Report 3
1.2. Test Facility 3
1.3. Testing Location 3
1.4. Laboratory Environment 3
2. General Description of Equipment Under Test 4
2.1. Applicant and Manufacturer Information 4
2.2. General Information 4
2.3. Test Date 4
2.4. Received Date 4
2.5. Applied Standards 5
3. Test Conditions 6
3.1. Test Configuration 6
3.2. Test Measurement 6
4. Test Results 7
4.1. Gain and Efficiency 7
5. Equipment List 8
ANNEX A: 3-D Pattern Plots 9
ANNEX B: The EUT Appearance and Test Configuration 10
B.1 EUT Appearance 10
B.2 Test Configuration 11

This report shall not be reproduced except in full, without the written approval of Eurofins TA Technology (Shanghai) Co., Ltd.

1. Test Laboratory

1.1. Notes of the Test Report

This report shall not be reproduced in full or partial, without the written approval of **Eurofins TA Technology (Shanghai) Co., Ltd.** The results documented in this report apply only to the tested sample, under the conditions and modes of operation as described herein. Measurement Uncertainties were not taken into account and are published for informational purposes only. This report is written to support regulatory compliance of the applicable standards stated above.

1.2. Test Facility

A2LA (Certificate Number: 3857.01)

Eurofins TA Technology (Shanghai) Co., Ltd. has been listed by American Association for Laboratory Accreditation to perform measurement.

1.3. Testing Location

Company:	Eurofins TA Technology (Shanghai) Co., Ltd.
Address:	Building 3, No.145, Jintang Rd, Pudong Shanghai, P.R.China
City:	Shanghai
Post code:	201201
Country:	P. R. China
Contact:	Fan Guangchang
Telephone:	+86-021-50791141/2/3
Fax:	+86-021-50791141/2/3-8000
Website:	https://www.eurofins.com/electrical-and-electronics
E-mail:	Jack.Fan@cpt.eurofinscn.com

1.4. Laboratory Environment

Temperature	15°C ~ 35°C	
Relative humidity	20% ~ 80%	
Shield effect	0.7-6GHz	> 100dB
Ground resistance	<0.5Ω	

This report shall not be reproduced except in full, without the written approval of Eurofins TA Technology (Shanghai) Co., Ltd.

2. General Description of Equipment Under Test

2.1. Applicant and Manufacturer Information

Applicant Name	Shanghai Xin an Information and Technology Co. Ltd.
Applicant address	1st Floor, Building 8, Lane 568, Tanglu Road, Pudong New Area, Shanghai, China
Manufacturer Name	Shanghai Xin an Information and Technology Co. Ltd.
Manufacturer address	1st Floor, Building 8, Lane 568, Tanglu Road, Pudong New Area, Shanghai, China

2.2. General Information

EUT Description	
Product Name:	Mtag
Model:	Mtag
HW Version:	HW 1.0
SW Version:	1.2.0
Antenna Type:	Internal Antenna
Antenna Manufacturer:	Shanghai Xin'an Information and Technology Co. Ltd.
Antenna Model:	Mtag
Test Frequency:	2400MHz ~ 2484MHz
Note: The EUT is sent from the applicant to Eurofins TA and the information of the EUT is declared by the applicant. All indications of Pass/Fail in this report are opinions expressed by Eurofins TA Technology (Shanghai) Co., Ltd. based on interpretations and/or observations of test results. Measurement Uncertainties were not taken into account and are published for informational purposes only.	

2.3. Test Date

The test is performed from July 3, 2024.

2.4. Received Date

The sample was received on July 2, 2024.

This report shall not be reproduced except in full, without the written approval of Eurofins TA Technology (Shanghai) Co., Ltd.

2.5. Applied Standards

According to the specifications of the manufacturer, it must comply with the requirements of the following standards:

Test Method: **ANSI/IEEE Std 149-2021**

This report shall not be reproduced except in full, without the written approval of Eurofins TA Technology (Shanghai) Co., Ltd.

3. Test Conditions

3.1. Test Configuration

Great-Circle-Cut method is used to measure the antenna 3D GAIN of EUT in OTA qualified anechoic chamber. Equipment Under Test (EUT) geometry centre vertical projection at the centre of platform, the distance from EUT to measurement antenna is 5m.

3.2. Test Measurement

Spherical coordinate system

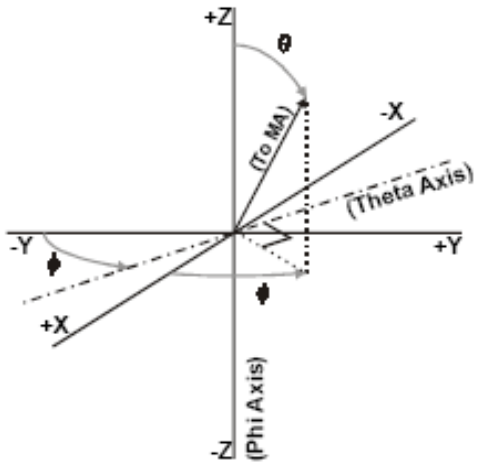

Figure 1 Test coordinate system

Note: Theta is from 0~180 degree. Phi is from 0~360. Rotate the EUT and record the Data, the step of rotation is 15 degree.

Test Setup

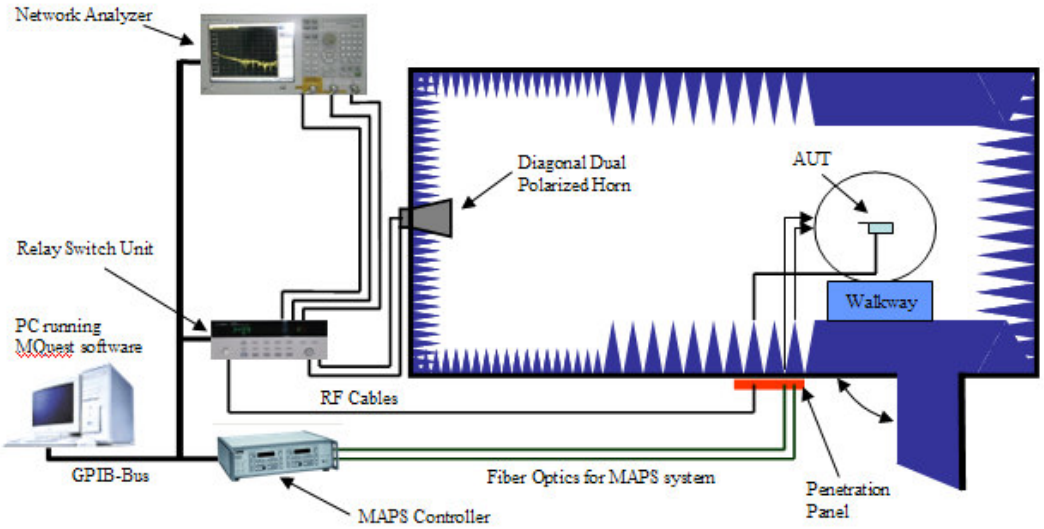

This report shall not be reproduced except in full, without the written approval of Eurofins TA Technology (Shanghai) Co., Ltd.

4. Test Results

4.1. Gain and Efficiency

Test State	Frequency (MHz)	Efficiency (%)	Gain (dBi)	Note
Free Space	2402	18.39	-1.76	/
	2407	19.60	-1.85	
	2412	20.73	-1.59	
	2417	22.60	-1.71	
	2422	24.48	-1.04	
	2427	25.14	-1.02	
	2432	25.59	-0.81	
	2437	25.18	-0.74	
	2442	25.27	-0.53	
	2447	26.10	0.02	
	2452	26.82	-0.13	
	2457	27.59	0.22	
	2462	27.81	0.61	
	2467	28.86	1.06	
	2472	29.22	0.83	
	2477	29.40	1.34	
	2482	29.94	1.30	
	2485	29.87	1.32	

This report shall not be reproduced except in full, without the written approval of Eurofins TA Technology (Shanghai) Co., Ltd.

5. Equipment List

• Type of Equipment	Manufacturer	Model	SN	Version	Calibration Date	Expiration Time
Anechoic Chamber	ETS	AMS-8500	CT-001157-1219	/	2020-05-17	2025-05-16
Test Software	ETS	EMQuest™	1464	REV 1.17	/	/
EMCenter_Switch Control System	ETS	7006/7001	00059957/ MY42001152	/	/	/
Diagonal Dual Polarized Horn	ETS	ETS 3164-04	00062743	/	2024-03-09	2029-03-08
Network Analyzer	Keysight	E5071B	MY42404014	REV.A.0 6.50	2024-05-07	2025-05-06

This report shall not be reproduced except in full, without the written approval of Eurofins TA Technology (Shanghai) Co., Ltd.

ANNEX A: 3-D Pattern Plots

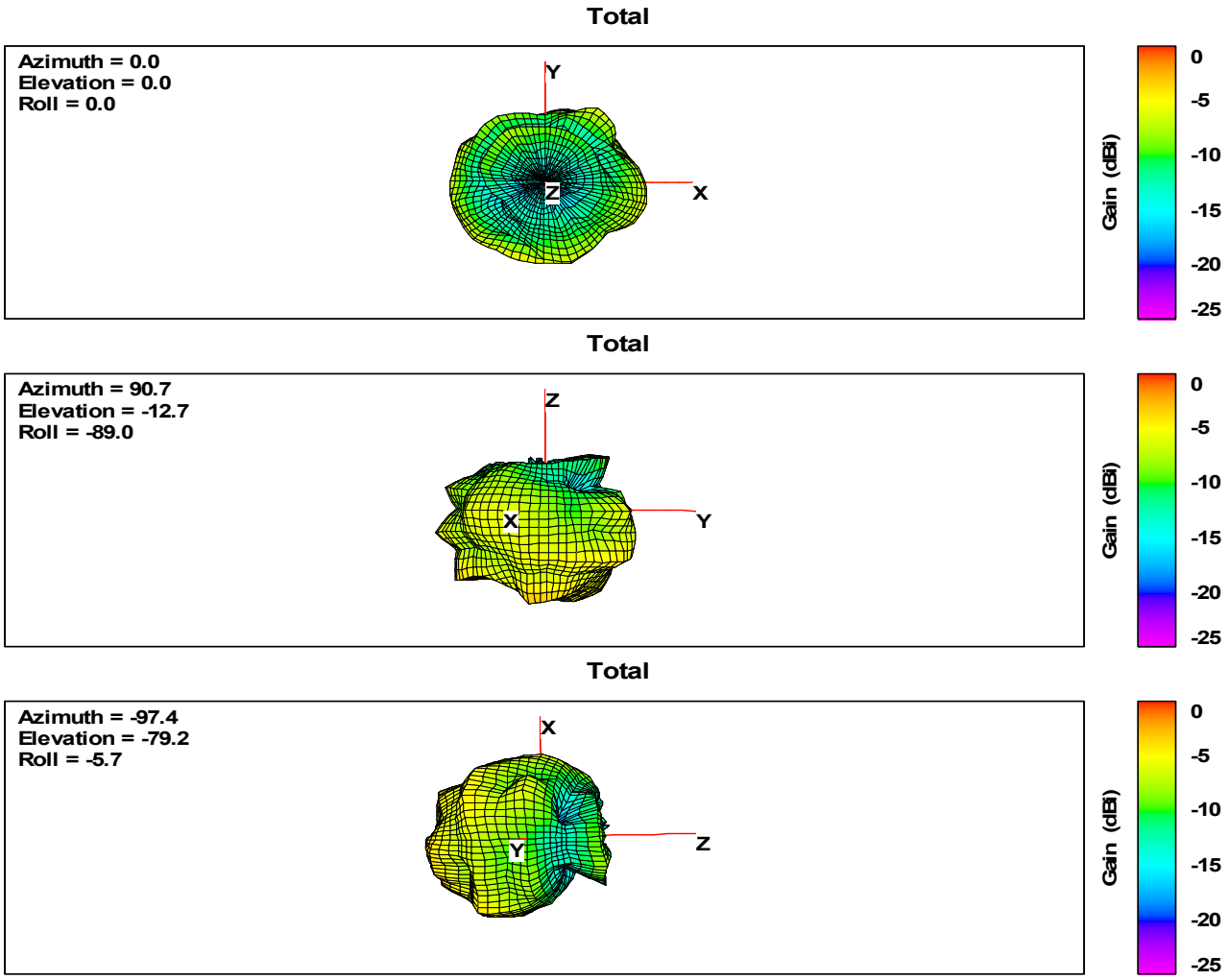

2.4G 3D Gain

This report shall not be reproduced except in full, without the written approval of Eurofins TA Technology (Shanghai) Co., Ltd.

ANNEX B: THE EUT APPEARANCE AND TEST CONFIGURATION

B.1 EUT Appearance

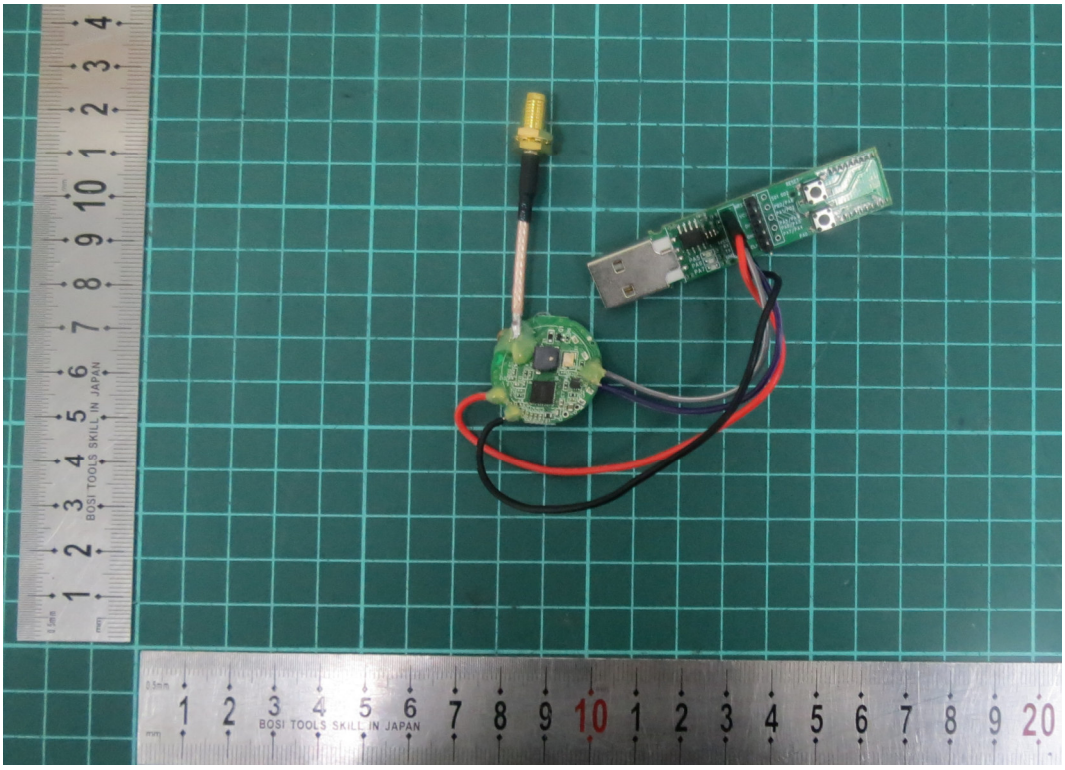

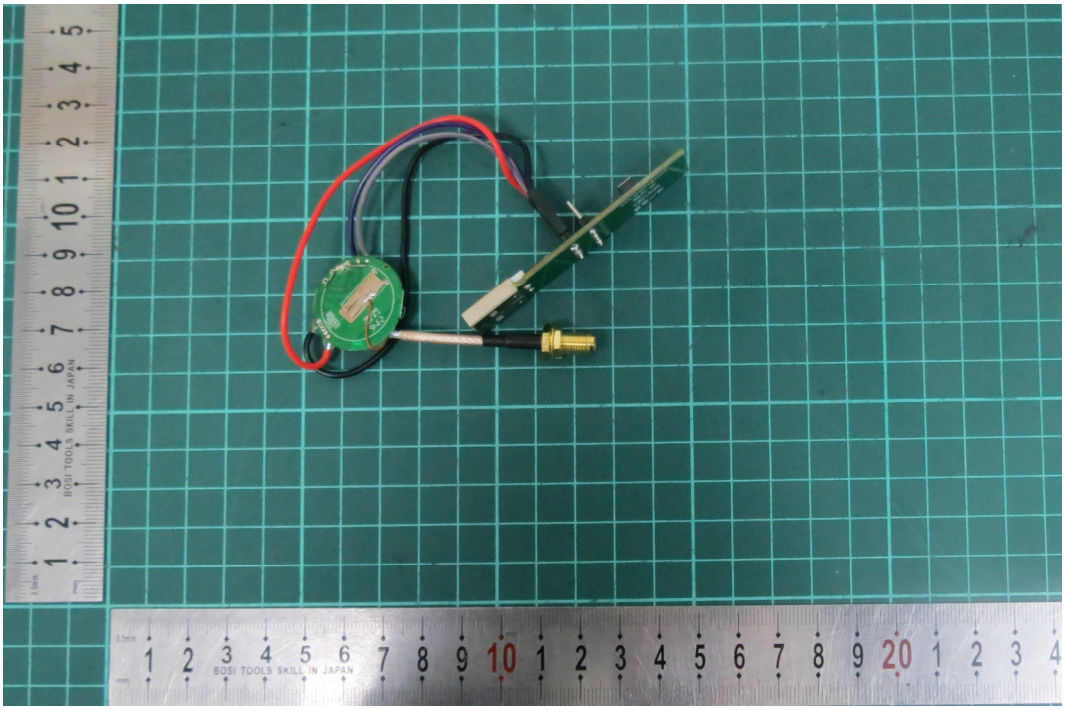

Picture 1 Constituents of EUT

This report shall not be reproduced except in full, without the written approval of Eurofins TA Technology (Shanghai) Co., Ltd.

B.2 Test Configuration

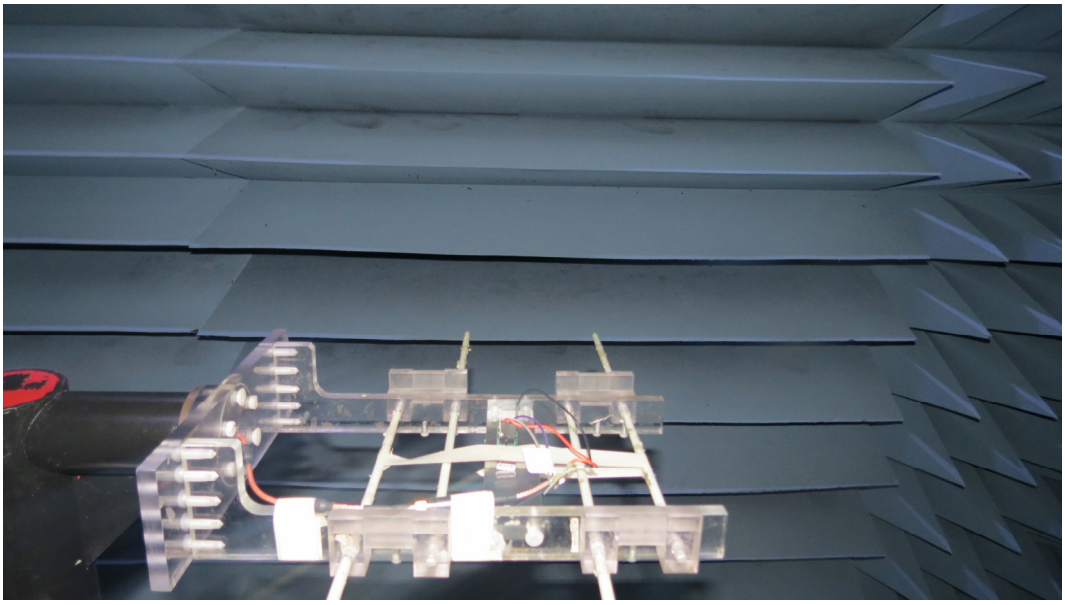

Picture 2 Test Setup

********END OF REPORT ********

This report shall not be reproduced except in full, without the written approval of Eurofins TA Technology (Shanghai) Co., Ltd.