FCC Test Report

Applicant	:	**Shen Zhen Travel Shark Digital Co.,Ltd.**
Address	:	**5F, Building B, Yidehang Industrial Park, Fukang Community, Longhua Street, Longhua District, Shenzhen, China**
Product Name	:	**Wireless charging mobile power bank**
Report Date	:	**Aug. 05, 2024**

Shenzhen Anbotek Compliance Laboratory Limited

Contents

1. General Information 5
1.1. Client Information 5
1.2. Description of Device (EUT) 5
1.3. Auxiliary Equipment Used During Test 6
1.4. Description of Test Modes 6
1.5. Test Equipment List 6
1.6. Measurement Uncertainty 6
1.7. Description of Test Facility 6
1.8. Disclaimer 7
2. Measurement and Result 8
2.1. Requirements 8
2.2. Test Setup 9
2.3. Test Procedure 10
2.4. Test Result 11
APPENDIX I -- TEST SETUP PHOTOGRAPH 16
APPENDIX II -- EXTERNAL PHOTOGRAPH 16
APPENDIX III -- INTERNAL PHOTOGRAPH 16

TEST REPORT

Applicant	:	Shen Zhen Travel Shark Digital Co.,Ltd.
Manufacturer	:	Shen Zhen Travel Shark Digital Co.,Ltd.
Product Name	:	Wireless charging mobile power bank
Model No.	:	NX-YSP04
Trade Mark	:	N/A
Rating(s)	:	Input Type-C: 5V⎓ 3A,9V⎓ 2A Output Type-C: 5V⎓ 2.4A 9V⎓ 2.22A 12V⎓ 1.5A Input Lightning: 5V⎓ 2A Wireless Output: 5W/7.5W/10W/15W Battery Capacity: DC 3.85V, 10000mAh
Test Standard(s)	**:**	**FCC Part 1.1310, 1.1307(b)**
Test Method(s)	**:**	**KDB680106 D01 Wireless Power Transfer v04 October 25, 2023 TCB Workshop**

The device described above is tested by Shenzhen Anbotek Compliance Laboratory Limited to determine the maximum emission levels emanating from the device and the severe levels of the device can endure and its performance criterion. The measurement results are contained in this test report and Shenzhen Anbotek Compliance Laboratory Limited is assumed full of responsibility for the accuracy and completeness of these measurements. Also, this report shows that the EUT (Equipment Under Test) is technically compliant with the FCC Part 1.1307 & KDB680106 D01 & TCB Workshop, October 25, 2023 requirements.

This report applies to above tested sample only and shall not be reproduced in part without written approval of Shenzhen Anbotek Compliance Laboratory Limited.

Date of Receipt	Jul. 16, 2024
Date of Test	Jul. 16, 2024 to Jul. 29, 2024
Prepared By	(TuTu Hong)
Approved & Authorized Signer	(Edward Pan)

Revision History

Report Version	Description	Issued Date
R00	Original Issue.	Aug. 05, 2024

1. General Information

1.1. Client Information

Applicant	:	Shen Zhen Travel Shark Digital Co.,Ltd.
Address	:	5F, Building B, Yidehang Industrial Park, Fukang Community, Longhua Street, Longhua District, Shenzhen, China
Manufacturer	:	Shen Zhen Travel Shark Digital Co.,Ltd.
Address	:	5F, Building B, Yidehang Industrial Park, Fukang Community, Longhua Street, Longhua District, Shenzhen, China
Factory	:	Shen Zhen Travel Shark Digital Co.,Ltd.
Address	:	5F, Building B, Yidehang Industrial Park, Fukang Community, Longhua Street, Longhua District, Shenzhen, China

1.2. Description of Device (EUT)

Product Name	:	Wireless charging mobile power bank
Model No.	:	NX-YSP04
Trade Mark	:	N/A
Test Power Supply	:	DC 5V from adapter input AC 120V/60Hz, DC 3.85V battery inside
Test Sample No.	:	1-2-1(Normal Sample), 1-2-2(Engineering Sample)
Adapter	:	N/A
RF Specification		
Operation Frequency	:	112~205 kHz
Modulation Type	:	FSK
Antenna Type	:	Inductive loop coil Antenna
Antenna Gain(Peak)	:	0dBi
Remark: 1) All of the RF specification are provided by customer. 2) For a more detailed features description, please refer to the manufacturer's specifications or the User's Manual.		

1.3. Auxiliary Equipment Used During Test

Description	Rating(s)
Xiaomi Phone	Xiaomi 14

1.4. Description of Test Modes

Pretest Mode	Description
TM1	WPT Mode(5W)
TM2	WPT Mode(7.5W)
TM3	WPT Mode(10W)
TM4	WPT Mode(15W)
TM5	Standby Mode

1.5. Test Equipment List

Item	Equipment	Manufacturer	Model No.	Serial No.	Last Cal.	Cal. Interval
1	Electric and Magnetic field Analyzer	NARDA	EHP-200A	180ZX102 02	Oct. 16, 2023	1 Year

1.6. Measurement Uncertainty

Parameter	Uncertainty
Magnetic Field Reading(A/m)	+/-0.04282(A/m)
Electric Field Reading(V/m)	+/-0.03679(V/m)

1.7. Description of Test Facility

The test facility is recognized, certified, or accredited by the following organizations:

FCC-Registration No.: 434132

Shenzhen Anbotek Compliance Laboratory Limited, EMC Laboratory has been registered and fully described in a report filed with the (FCC) Federal Communications Commission. The acceptance letter from the FCC is maintained in our files. Registration No. 434132.

ISED-Registration No.: 8058A

Shenzhen Anbotek Compliance Laboratory Limited, EMC Laboratory has been registered and fully described in a report filed with the (ISED) Innovation, Science and Economic Development Canada.

The acceptance letter from the ISED is maintained in our files. Registration 8058A.

Test Location

Shenzhen Anbotek Compliance Laboratory Limited.

1/F, Building D, Sogood Science and Technology Park, Sanwei community, Hangcheng Street, Bao'an District, Shenzhen, Guangdong, China.

1.8. Disclaimer

1. The test report is invalid if not marked with the signatures of the persons responsible for preparing and approving the test report.
2. The test report is invalid if there is any evidence and/or falsification.
3. The results documented in this report apply only to the tested sample, under the conditions and modes of operation as described herein.
4. This document may not be altered or revised in any way unless done so by Anbotek and all revisions are duly noted in the revisions section.
5. Content of the test report, in part or in full, cannot be used for publicity and/or promotional purposes without prior written approval from the laboratory.
6. The authenticity of the information provided by the customer is the responsibility of the customer and the laboratory is not responsible for its authenticity.

The laboratory is only responsible for the data released by the laboratory, except for the part provided by the applicant.

2. Measurement and Result

2.1. Requirements

According to the item 5.b) of KDB 680106 D01v04:

Inductive wireless power transfer applications that meet all of the following requirements are excluded from submitting an RF exposure evaluation.

(1) The power transfer frequency is below 1 MHz.

(2) The output power from each transmitting element (e.g., coil) is less than or equal to 15 watts.

(3) A client device providing the maximum permitted load is placed in physical contact with the transmitter (i.e., the surfaces of the transmitter and client device enclosures need to be in physical contact)

(4) Only § 2.1091-Mobile exposure conditions apply (i.e., this provision does not cover § 2.1093-Portable exposure conditions).

(5) The E-field and H-field strengths, at and beyond 20 cm surrounding the device surface, are demonstrated to be less than 50% of the applicable MPE limit, per KDB 447498, Table 1. These measurements shall be taken along the principal axes of the device, with one axis oriented along the direction of the estimated maximum field strength, and for three points per axis or until a 1/d (inverse distance from the emitter structure) field strength decay is observed. Symmetry considerations may be used for test reduction purposes. The device shall be operated in documented worst-case compliance scenarios (i.e., the ones that lead to the maximum field components), and while all the radiating structures (e.g., coils or antennas) that by design can simultaneously transmit are energized at their nominal maximum power.

(6) For systems with more than one radiating structure, the conditions specified in (5) must be met when the system is fully loaded (i.e., clients absorbing maximum power available), and with all the radiating structures operating at maximum power at the same time, as per design conditions. If the design allows one or more radiating structures to be powered at a higher level while other radiating structures are not powered, then those cases must be tested as well. For instance, a device may use three RF coils powered at 5 W, or one coil powered at 15 W: in this case, both scenarios shall be tested.

Limits For Maximum Permissible Exposure (MPE)

Frequency range (MHz)	Electric field strength (V/m)	Magnetic field strength (A/m)	Power density (mW/cm^2)	Averaging time (minutes)
(A) Limits for Occupational/Controlled Exposures				
0.3-3.0	614	1.63	*(100)	6
3.0-30	1842/f	4.89/f	*(900/f^2)	6
30-300	61.4	0.163	1.0	6
300-1500	/	/	f/300	6
1500-100,000	/	/	5	6
(B) Limits for General Population/Uncontrolled Exposure				
0.3-1.34	614	1.63	*(100)	30
1.34-30	824/f	2.19/f	*(180/f^2)	30
30-300	27.5	0.073	0.2	30
300-1500	/	/	f/1500	30
1500-100,000	/	/	1.0	30

F=frequency in MHz
*=Plane-wave equivalent power density
RF exposure compliance will need to be determined with respect to 1.1307(c) and (d) of the FCC rules. The emissions should be within the limits at 300kHz in Table 1 of 1.1310(use the 300kHz limits for 150kHz:614V/m,1.63A/m).

2.2. Test Setup

1) H-field data are taken along all three axes the device, from 0 cm to 20 cm, in 2 cm minimum increment measured from the edge of the device, with one axis coincident with the axis of the main coil.

2) “Large size” probes may prevent the measurement of E- and/or H-fields near the surface of the radiating structure (e.g., a WPT source coil), as in the example shown in Figure 1.

If the center of the probe sensing element is located more than 5 mm from the probe outer surface, the field strengths need to be estimated through modeling for those positions that are not reachable. The estimates may be done either via numerical calculation, or via analytic model: e.g., approximated formulas for circular coils, dipoles, etc., may be acceptable if it is shown that the model is applicable for the design parameters considered. A typical example is the use of a quasi-static approximation formula for a low-frequency magnetic field source.

These estimates shall include points spaced no more than 2 cm from each other. Thus, in the example of Figure 1, at least the estimates at 0 cm2 and 2 cm are required, while only one point would not be sufficient. In addition, the model needs to be validated through the probe measurements for the two closest points to the device surface, and with 2-cm increments, as indicated in Figure 1. In that example, the same model must also be applied to the 4 cm and 6 cm positions, and then compared

with the measured data, for validation purposes. The validation is considered sufficient if a 30% agreement between the model and the (E- and/or H-field) probe measurements is demonstrated. If such a level of agreement cannot be shown, a more accurate model (and/or a smaller probe) shall be used.

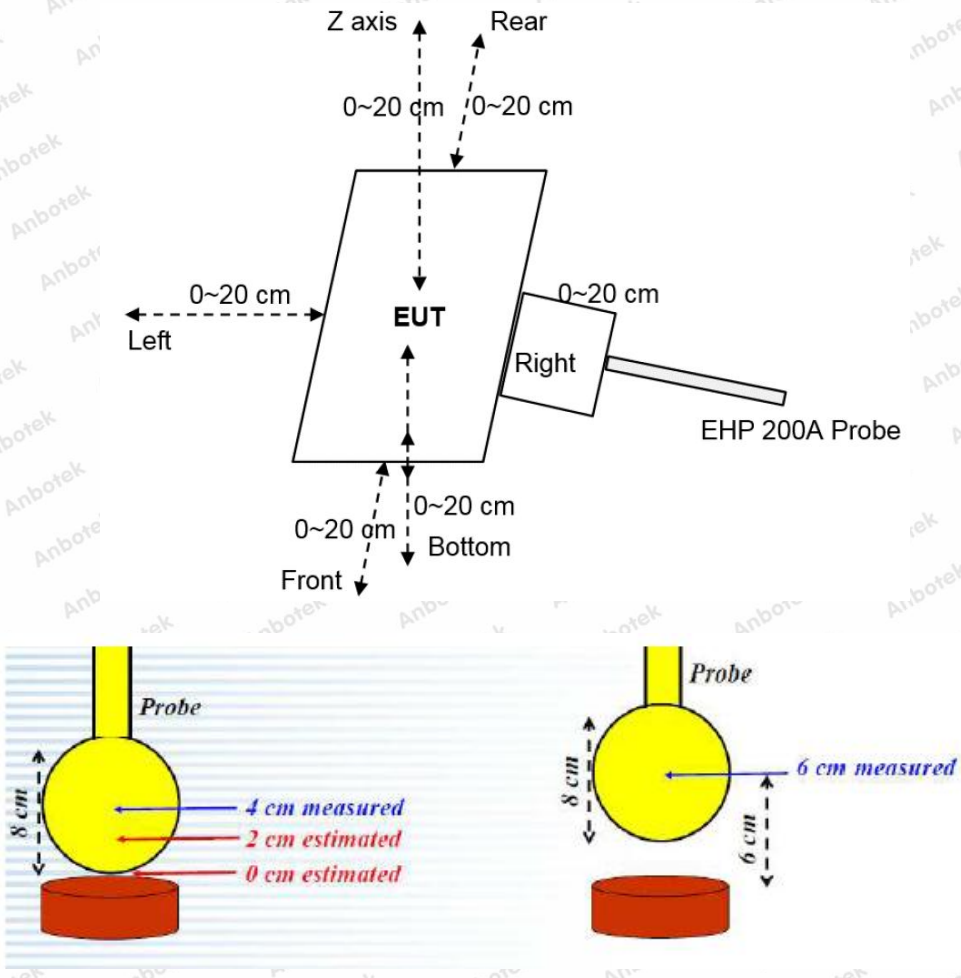

Figure 1

2.3. Test Procedure

1) The RF exposure test was performed in anechoic chamber.

2) The measurement probe was placed at required test distance (from 0 cm to 20 cm, in 2 cm minimum increment) which is between the edge/top surface of the charger and the center of the probe.

and the measurement probe was placed at required test distance 15cm and 20cm which is between the edge of the charger and the geometric center of probe.

3) The highest emission level was recorded and compared with limit as soon as measurement of each points (Left, Right, Front, Rear, Z axis, Bottom) were completed.

4) The EUT was measured according to the dictates of TCB Workshop, October 25, 2023 and KDB 680106 D01 v04.

Remark;

The EUT's test position Left, Right, Front, Rear, Top, Bottom is valid for the E and H field measurements.

2.4. Test Result

2.4.1. Equipment Approval Considerations item 5.b of KDB 680106 D01 v04.

(1) The power transfer frequency is below 1 MHz.

- The device operate in the frequency range 112-205KHz.

(2) The output power from each transmitting element (e.g., coil) is less than or equal to 15 watts.

- The maximum output power of the primary coil is 15W.

(3) A client device providing the maximum permitted load is placed in physical contact with the transmitter (i.e., the surfaces of the transmitter and client device enclosures need to be in physical contact)

- The surfaces of the transmitter and client device enclosures is in physical contact.

(4) Only § 2.1091-Mobile exposure conditions apply (i.e., this provision does not cover § 2.1093-Portable exposure conditions).

- The EUT is a portable exposure conditions

(5) The E-field and H-field strengths, at and beyond 20 cm surrounding the device surface, are demonstrated to be less than 50% of the applicable MPE limit, per KDB 447498, Table 1. These measurements shall be taken along the principal axes of the device, with one axis oriented along the direction of the estimated maximum field strength, and for three points per axis or until a 1/d (inverse distance from the emitter structure) field strength decay is observed. Symmetry considerations may be used for test reduction purposes. The device shall be operated in documented worst-case compliance scenarios (i.e., the ones that lead to the maximum field components), and while all the radiating structures (e.g., coils or antennas) that by design can simultaneously transmit are energized at their nominal maximum power.

- Conducted the measurement with the required distance and the test results please refer to the section 2.4.

(6) For systems with more than one radiating structure, the conditions specified in (5) must be met when the system is fully loaded (i.e., clients absorbing maximum power available), and with all the radiating structures operating at maximum power at the same time, as per design conditions. If the design allows one or more radiating structures to be powered at a higher level while other radiating structures are not powered, then those cases must be tested as well. For instance, a device may use three RF coils powered at 5 W, or one coil powered at 15 W: in this case, both scenarios shall be tested.

- The EUT is one radiating structure.

2.4.2. Estimated method for portable RF Exposure condition:

According to Calibration information and specification about EHP200A, The Probe EHP200A's sensitive elements center are 8mm below the external surface, and the dimensions is 92x92x109 mm. So the actual 0cm field strengths need to be estimated for the positions that are not reachable. The Extrapolated Value Calculation Method please Refer to below formula). And the result of test distance 2cm~20cm was measured value.

Probe	Length	Width	Height
	109mm	92mm	92mm

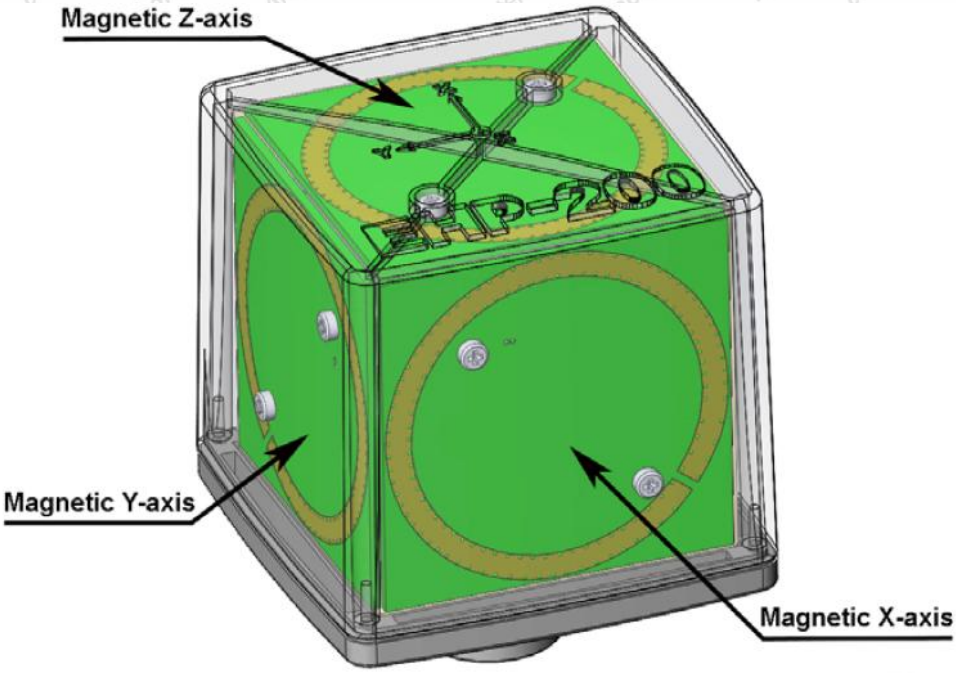

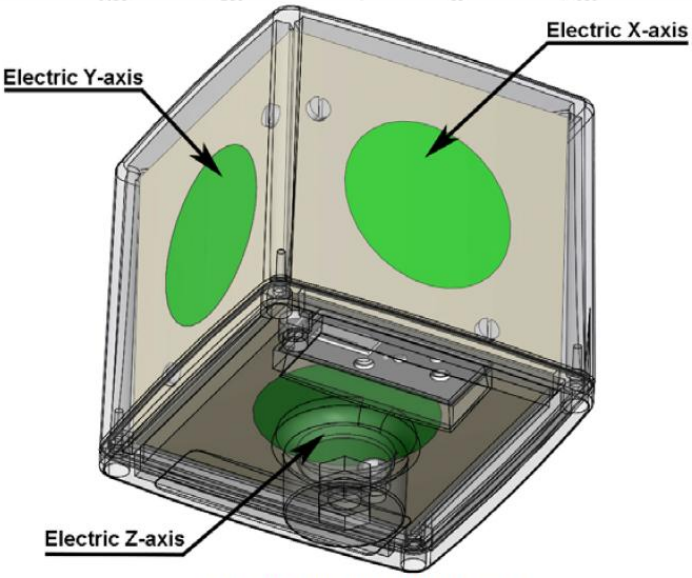

EHP-200A/EHP-200AC axes

The sensitive elements are located approximately 8 mm below the external surface

We use Biot-Savart formula theory to estimate the strength of the magnetic field that the measuring instrument cannot measure. According to Biot-Savart formula:

Top & Bottom Side:

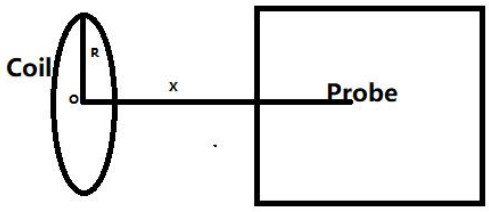

$$B = \frac{\mu_0 * I * N * R^2}{2 * (R^2 + x^2)^{3/2}}$$

Front, left, right & rear Side:

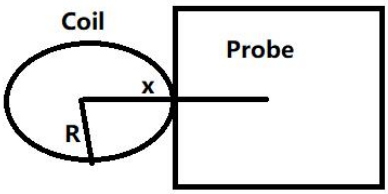

$$B = \frac{\mu_0 * I * N}{2 * x}$$

B: means H-field value;

μ_0 is space permeability; $\mu_0=4\pi*10^{-7}$;

I：A current element passing through a coil；

R：means the Radius of coil, the minimum R=40mm/2=20mm=0.02m , EUT photos shows below.

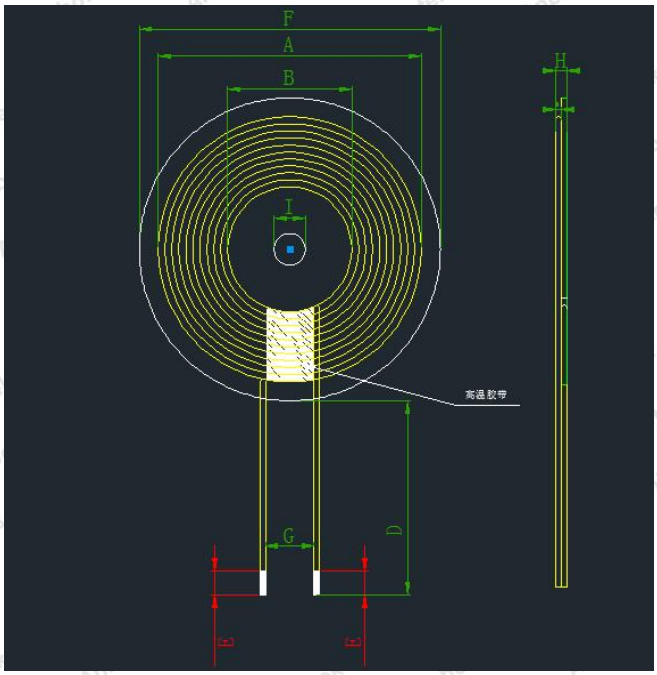

A	38.50±1.5
B	20.5±0.5
C	1.25 Max
D	15±2
E	4±2
F	43.5±1

Test distance: The distance from the sensing element of the probe to the edge of the device surface.

x: means the evaluated point to the coil center (For top & bottom side: x=test distance; For other side: x=test distance+R)

N: Number of turns, According to provided “Antenna specification” files: N=10.

For validation purposes: If the value to show a **30% agreement** between the mode and the (E- and/or H-field) probe measurements for the two closest points to the device surface, and with 2cm increments. Then this extrapolation method is reasonable.

Note: The percent ratio of agreement is the difference between the estimated and measured values divided by the average of the estimated and measured values.

EUT is a loop/coil emitting structure, so E-field not required. Just recorded the H-field value.

2.4.3. Environmental evaluation and exposure limit according to FCC CFR 47 part 1, 1.1307(b), 1.1310

Temperature:	26.3°C	Relative Humidity:	50.3%
Pressure:	101 kPa	Test Voltage:	DC 3.85V battery inside

Between the edge/top surface of the charger and the center of probe

H-Field Strength								
Test distance	Battery power	Test Position Left	Test Position Right	Test Position Rear	Test Position Front	Test Position Top	Test Position Bottom	Limit sTest (A/m)
0cm Estimated	1%	1.0056	1.0392	0.8072	0.7792	0.2902	0.2509	1.63
2cm Estimated	1%	0.1674	0.1745	0.1289	0.1198	0.1320	0.1162	1.63
Maximum Agreement for 2cm Estimated: 29.3% (Within 30%)								
2cm Measured	1%	0.1257	0.1299	0.1009	0.0974	0.1026	0.0887	1.63
4cm Estimated	1%	0.0661	0.0695	0.0510	0.0469	0.0430	0.0396	1.63
Maximum Agreement for 4cm Estimated: 9.56% (Within 30%)								
4cm Measured	1%	0.0496	0.0517	0.0382	0.0355	0.0334	0.0294	1.63
6cm	1%	0.0279	0.0293	0.0215	0.0198	0.0152	0.0140	1.63
8cm	1%	0.0273	0.0284	0.0195	0.0195	0.0150	0.0137	1.63
10cm	1%	0.0269	0.0281	0.0185	0.0196	0.0148	0.0135	1.63
12cm	1%	0.0267	0.0279	0.0181	0.0193	0.0146	0.0134	1.63
14cm	1%	0.0263	0.0278	0.0179	0.0190	0.0142	0.0130	1.63
16cm	1%	0.0262	0.0274	0.0177	0.0185	0.0140	0.0128	1.63
18cm	1%	0.0259	0.0272	0.0173	0.0182	0.0137	0.0126	1.63
20cm	1%	0.0254	0.0268	0.0172	0.0181	0.0136	0.0123	1.63

Note:

(1) Position E is top side.

(2) All the situation (full load, half load and empty load) has been tested, only the worst situation (full load15W) was recorded in the report.

(3) All three axes the device has been tested, only the worst results reported.

(4) All positions have been tested, only display photos of Position E and A in the report.

Address:1/F.,Building D,Sogood Science and Technology Park, Sanwei Community, Hangcheng Street, Bao'an District, Shenzhen, Guangdong, China.
Tel:(86) 0755-26066440 Fax:(86) 0755-26014772 Email:service@anbotek.com
Hotline 400-003-0500
www.anbotek.com.cn

APPENDIX I -- TEST SETUP PHOTOGRAPH

Please refer to separated files Appendix I -- Test Setup Photograph_MPE

APPENDIX II -- EXTERNAL PHOTOGRAPH

Please refer to separated files Appendix II -- External Photograph

APPENDIX III -- INTERNAL PHOTOGRAPH

Please refer to separated files Appendix III -- Internal Photograph

---------- End of Report ----------