TEST REPORT

Reference No.	:	WTX24X07161540W
Applicant	:	HEFEI HUMANTEK CO.,LTD
Address	:	19th Floor,Block B,Building F1,Xingmeng Park,High-tech Zone,Hefei,Anhui, China
Manufacturer	:	HEFEI HUMANTEK CO.,LTD
Address	:	19th Floor,Block B,Building F1,Xingmeng Park,High-tech Zone,Hefei,Anhui, China
Product Name	:	Copper spring antenna
Model No.	:	HM915-TH11
Standards	:	ANSI/ IEEE 149-2021
Date of Receipt sample	:	2024-07-12
Date of Test	:	2024-07-12 to 2024-07-16
Date of Issue	:	2024-07-16
Test Report Form No.	:	WTX_IEEE 149
Test Result	:	**Pass**

Remarks:

The results shown in this test report refer only to the sample(s) tested, this test report cannot be reproduced, except in full, without prior written permission of the company. The report would be invalid without specific stamp of test institute and the signatures of approver.

Prepared By:

Waltek Testing Group (Shenzhen) Co., Ltd.

Address: 1/F., Room 101, Building 1, Hongwei Industrial Park, Liuxian 2nd Road, Block 70 Bao'an District, Shenzhen, Guangdong, China

Tel.: +86-755-33663308 Fax.: +86-755-33663309 Email: sem@waltek.com.cn

Tested by: Mike Shi

Approved by: Silin Chen

TABLE OF CONTENTS

1.GENERAL INFORMATION **4**
1.1 PRODUCT DESCRIPTION FOR EQUIPMENT UNDER TEST (EUT) 4
2. SUMMARY OF TEST RESULTS **5**
3. ANTENNA TEST CONFIGURATIONS **6**
3.1 TEST LOCATION 6
3.1 TEST ENVIRONMENTS 6
3.2 TEST EQUIPMENT LIST 6
3.3 MEASUREMENT UNCERTAINTY 6
3.4 TEST SETUP 6
4. ANTENNA TEST RESULT **7**
4.1 GAIN AND EFFICIENCY 7
4.2 RADIATION PATTERN 2D VIEW 8
4.3 RADIATION PATTERN 3D VIEW 9
EXHIBIT 1 - EUT PHOTOGRAPHS **11**
EXHIBIT 2 - TEST SETUP PHOTOGRAPHS **12**

Report version

Version No.	Date of issue	Description
Rev.00	2024-07-16	Original
/	/	/

1.GENERAL INFORMATION

1.1 Product Description for Equipment Under Test (EUT)

General Description of EUT	
Product Name:	Copper spring antenna
Trade Name:	/
Model No.:	HM915-TH11
Adding Model(s):	/
Note: The test data is gathered from a production sample, provided by the manufacturer.	

Technical Characteristics of EUT	
Frequency Range:	900-930MHz
Gain of Antenna:	2.12dBi (Max.)
Type of Antenna:	Copper spring antenna
Size:	27*4.5mm

Dimension:

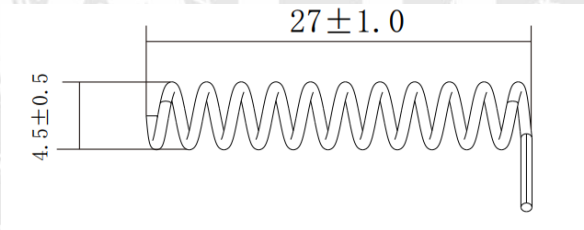

2. SUMMARY OF TEST RESULTS

Standards	Description of Test Item	Result
ANSI/ IEEE 149-2021	IEEE Recommended Practice for Antenna Measurements	Compliant

N/A: not applicable

3. Antenna Test Configurations

3.1 Test Location

Name:	Shenzhen Morlab Communications Technology Co.,Ltd.
Address:	FL.1-3, Building A, FeiYang Science Park, No.8 LongChang Road, Block67, BaoAn District, ShenZhen, GuangDong Province, P.R. China

3.1 Test Environments

Environments Parameter	Temperature	Voltage	Humidit
NTNV	25° C	--	50%

3.2 Test Equipment List

Description	Manufacturer	Model	Serial Number	Cal. Date	Due. Date
Network Analyzer	Agilent	E5071C	MY46110140	2024-05-30	2025-05-29
OTA Chamber	ETS	AMS-8923-150	TJ2235-Q1793	2022-11-30	2025-11-29
Antenna Measurement System	ETS	EMQuest EMQ-100 V1.13 Build 21267	1685	N/A	N/A

3.3 Measurement Uncertainty

The uncertainty is calculated using the methods suggested in the“Guide to the Expression of Uncertainty in Measurement" (GUM) published by ISO. When the test result is a critical value,we will use the measurement uncertainty give the judgment result based on the 95%Confidence intervals.

3.4 Test Setup

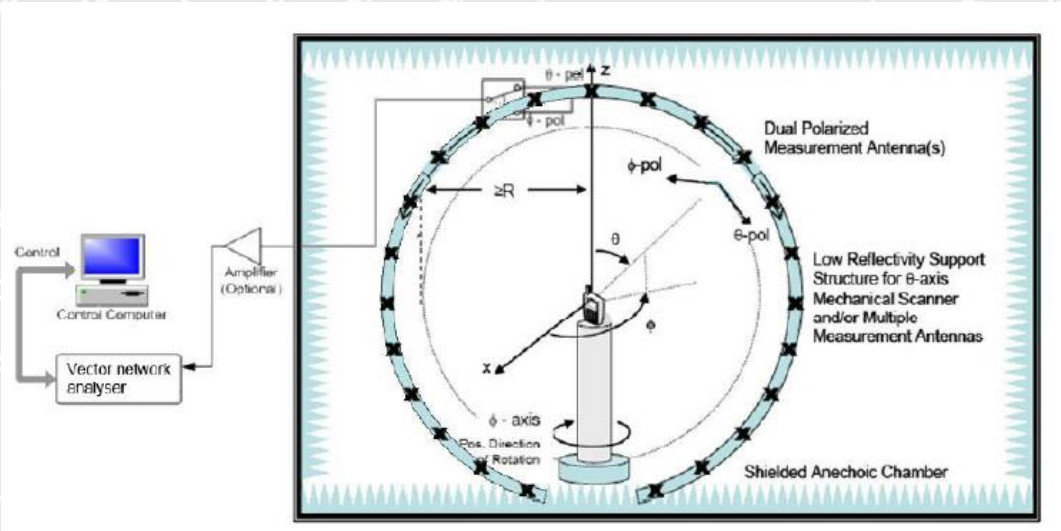

4. Antenna Test Result

4.1 Gain and Efficiency

Frequency (MHz)	Efficiency (%)	Gain (dBi)
900	60.49	1.34
910	69.04	1.91
920	73.63	2.12
930	73.46	2.06

4.2 Radiation Pattern 2D View

PHI=0

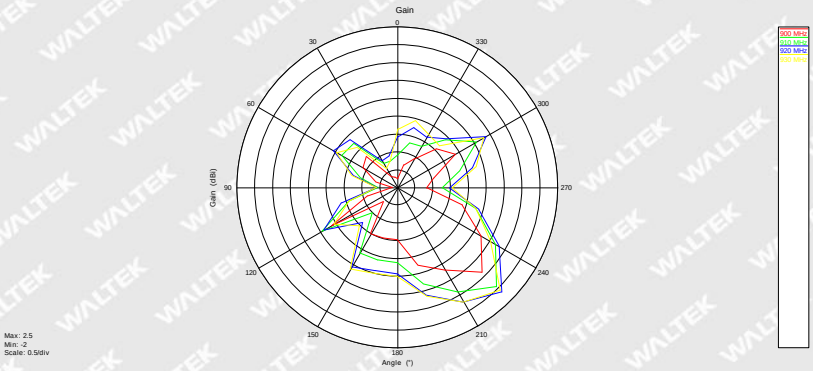

PHI=90

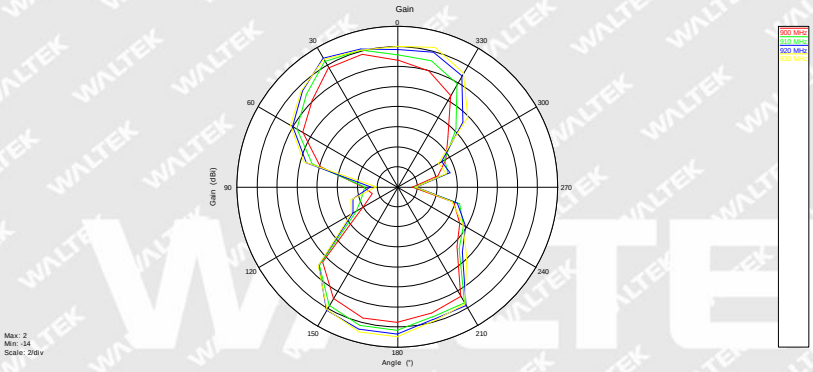

THETA=90

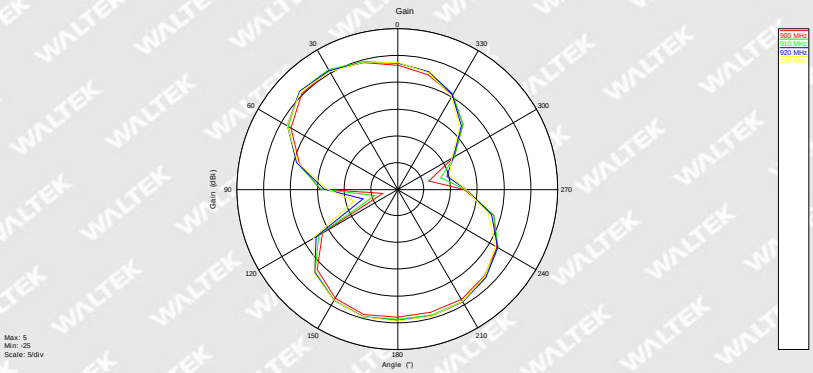

4.3 Radiation Pattern 3D View

900MHz

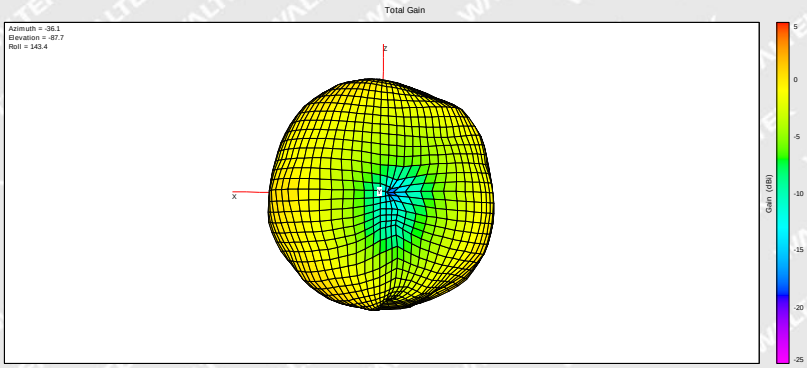

910MHz

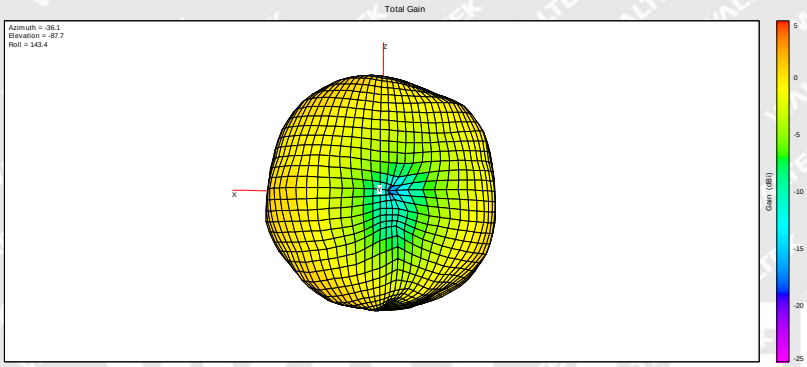

920MHz

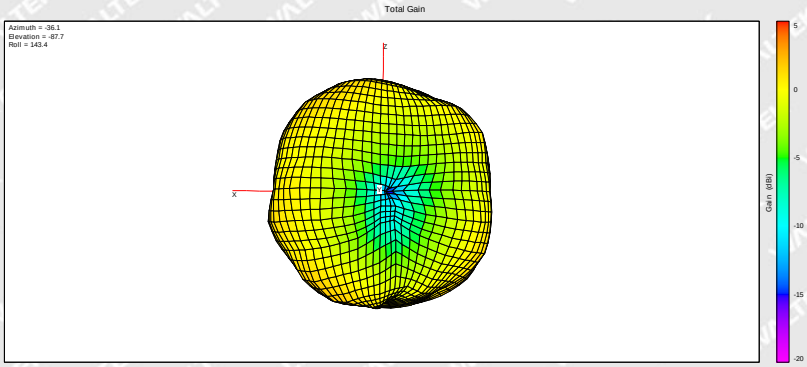

930MHz

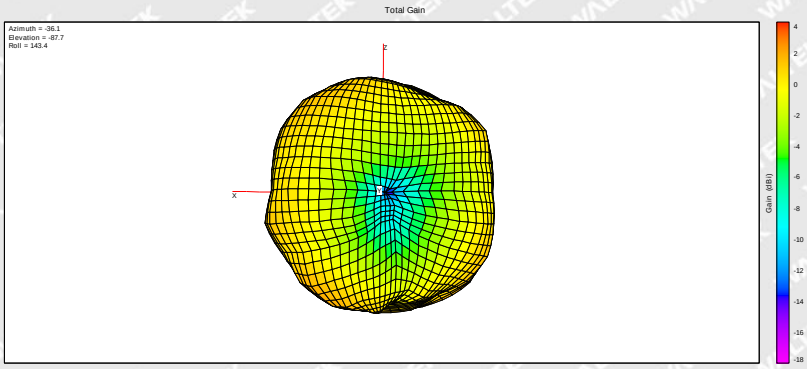
Total Gain
Azimuth = -36.1
Elevation = -87.7
Roll = 143.4
z
x
Gain (dBi)
4
2
0
-2
-4
-6
-8
-10
-12
-14
-16
-18

EXHIBIT 1 - EUT PHOTOGRAPHS

EUT View 1

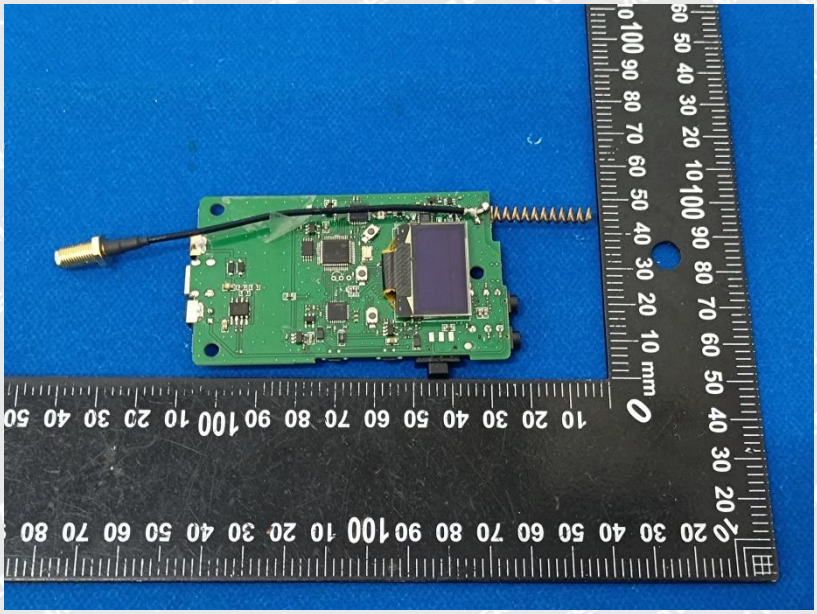

EXHIBIT 2 - TEST SETUP PHOTOGRAPHS

OTA Test View 1:

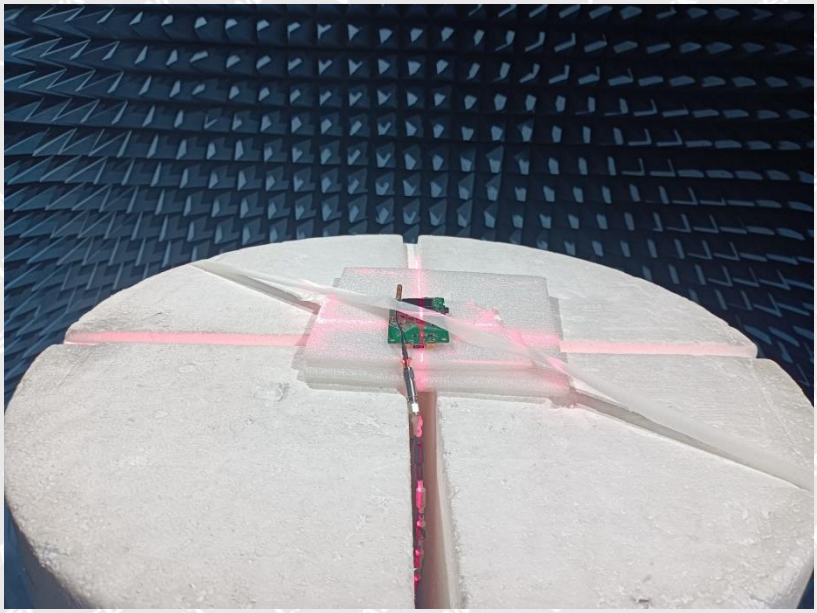

OTA Test View 2:

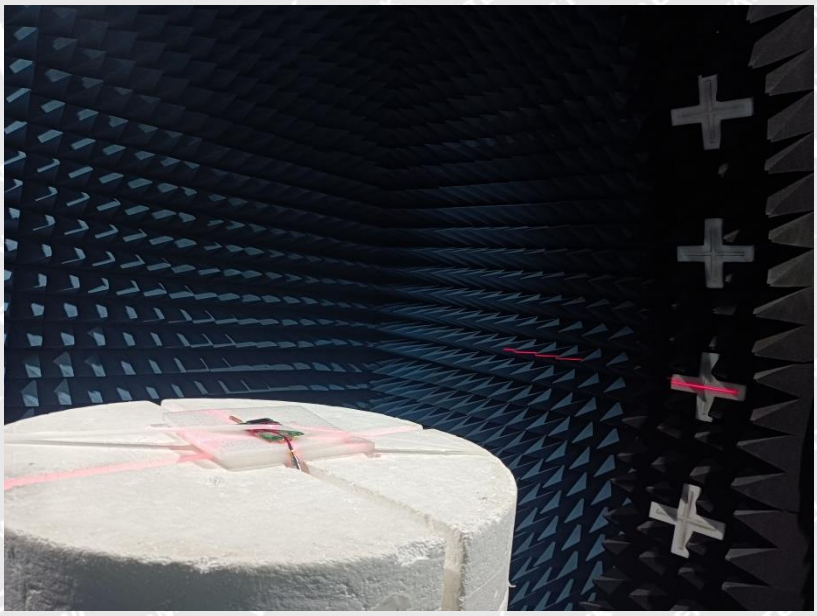

******* END OF REPORT *******