HTDisplay

10.1 Inch Industrial all-in-one Product Specifications

HTDAC101-C1200

HTDisplay Electronics Co., LTD

Versions	Release Date	Authorized	Audit	Authorize	Department
V1.0	2023.11.01	XiaoZhongmei	Zhang Qing	Hao Zhiheng	EID Business Division
V1.1	2024.4.20	XiaoZhongmei	Zhang Qing	Hao Zhiheng	EID Business Division
V1.2	2024.6.29	XiaoZhongmei	Zhang Qing	Hao Zhiheng	EID Business Division

Change the date	Change the record
2024.4.20	Change some English words
2024.6.29	Correction error description
2024.7.22	Change to full English version

HTDISPLAY

Table of contents

1. Product Presentation 4
1. 1. Product Brief Introduction 4
1. 2. Product Feature 4
2. Product Parameter 4
2. 1. Display Parameter 4
2. 2. Touch Parameters 5
2. 3. Hardware Configuration 5
2. 4. Interface Definition 6
2. 5. Power Supply 6
2. 6. Product Reliability 7
2. 7. Interface Panel 7
3. Product Feature 7
3. 1. Product Size 7
3. 2. Physical Characteristics 8
3. 3. Product Photo 8
3. 4. Install 8
3. 5. Packing Specification 9
3. 6. Packing List 9

HTDISPLAY

1. Product Presentation

1.1. Product Brief Introduction

The industrial Android integrated machine casing is made of cold-rolled sheet material, with precise dimensions, durability, heat resistance, and other advantages. fanless fully closed design scheme, low power consumption, compact shape, is specially designed for a variety of environments and industrial products, can ensure long-term stable work in harsh environments, in the machine materials we pay more attention to its reliability, environmental adaptability, real-time, scalability, EMC compatibility and other performance. Configuration uses RK3288 quad-core Cortex-A17 architecture. CPU equipped with Ubuntu16.04(Linux) system, the main frequency is up to 1.8GHz, with a variety of high-definition display interfaces to meet the needs of the field of a variety of application interfaces, provide a variety of work efficiency, widely used in industrial control, military, communications, power, network, intelligent self-service terminal equipment and other automation applications.

1.2. Product Feature

- RK3288, quad-core, 1.8GHz main frequency is used.
- Capacitive touch screen, the operation is more intuitive, more interesting, not easy to touch by mistake, high durability.
- Standard Ubuntu16.04 system, support system customization, can provide system call interface API reference code, support secondary development.
- High performance GPU, Mali-T764 high performance GPU with HDMI 4K output support.
- The protective grade board ensures the electromagnetic compatibility and oxidation resistance of the PCB.
- The use of first-line brand chip, as well as high quality of all kinds of components and exquisite patch technology to ensure that the product performance is more stable and reliable.

2. Product Parameter

2.1. Display Parameter

Size	10.1″
Resolution	1280×800
Viewing Angle	Free
Luminance (standard value)	luminance：450cd/m^2
Active Area	216.96(H) × 135.6(V)mm
Pixel Pitch (mm)	0.0565(H)×RGB×0.1695(V)

HTDISPLAY

2. 2. Touch Parameters

Type Of Touch Screen	CTP
Input Mode	Handwritten or capacitive pen

2. 3. Hardware Configuration

Parameter	RK3288
Framework	ARM
CPU	RK3288, quad-core, Cortex-A17, frequency 1.8GHz
GPU	Mali-T764
RAM	2GB DDR3
Storage	EMMC 8G (Options16G/32G)
WiFi, Bluetooth	Built-in WIFI, BT4.2
RTC	Support
DC	1×DC 2.0
HDMI	1×HDMI，Support 4k@60Hz output
Type-C	1×Type-C OTG
USB-HOST	2×USB HOST
RJ45 以太网接口	1×100M Ethernet
Security Camera	1×Security Camera； 5 million pixels
TF Card holder	1×TF Card holder；Data storage, maximum support 1T
Headset	3.5mm standard interface×1
SIM Card holder	SIM card interface×1, Standard interface, supports various formats (depending on 2G/3G/4G module)
RS232 interface	2×RS232 interface
RS485 interface	1×RS485 interface
Timing on/off machine	Support
System Upgrade	Support local SD,USB upgrade
Operating System	Ubuntu16.04(buildroot/debian-10) (Android-7.1/Android-10)

2. 4. Interface Definition

SN	Define	Level	Node
1	NC	/	/
2	RS485-A	/	/
3	RS485-B	/	/
4	NC	/	/
1	NC	/	/
2	RS232-T	/	/
3	RS232-R	/	/
4	GND	/	/
1	NC	/	/
2	RS232-T	/	/
3	RS232-R	/	/
4	GND	/	/

2. 5. Power Supply

Input Voltage	12V DC input

Quiescent Dissipation	TBD

2. 6. Product Reliability

Operating Temperature	-20 °C~70 °C
Storage Temperature	-30 °C~80 °C
Relative Humidity	Humidity: 40%~60% Non-Condensing
Certifications	CE/FCC/ROHS
Waterproof	The front panel is IP64 protected

2. 7. Interface Panel

RS232×2	RS485×1	DC×1
Type-C×1	TF Card holder×1	SIM Card holder×1
USB×2	Ethernet interface×1	Headset interface×1
HDMI×1		

3. Product Feature

3. 1. Product Size

Drawing of Dimensions	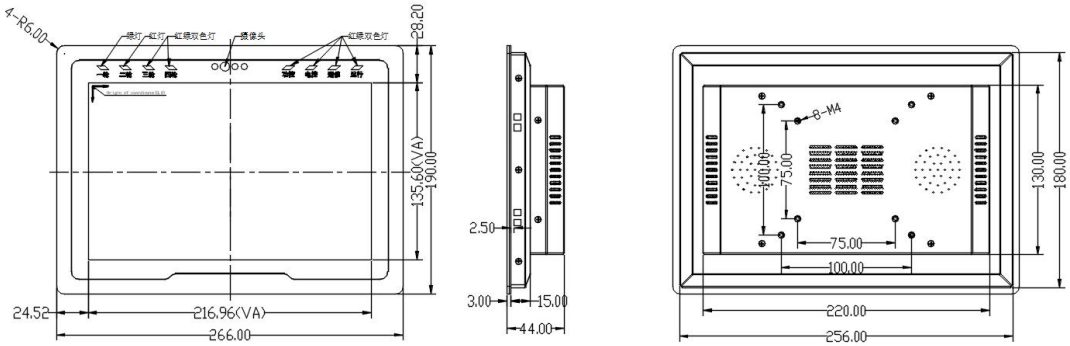
Overall Machine Size	266×190×44mm (L × W × H)

3. 2. Physical Characteristics

Overall Dimensions	266×190×44mm (L × W × H)
Hole Size	257×181mm (L× W)

3. 3. Product Photo

3. 4. Install

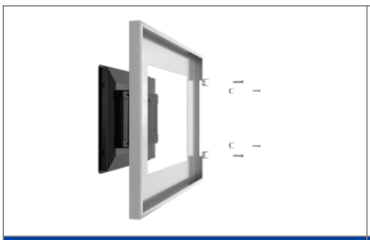	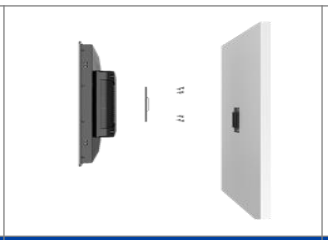	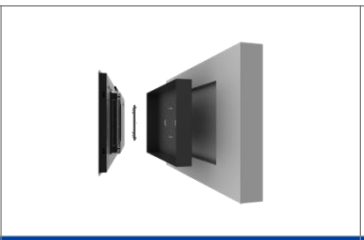	
Snap Embedded	Wall Mounting Type	Wall Type	Desktop Style

			More Installation Options Welcome to consult
Louvered Horizontal Type	Cantilever Type	Suspend-arm Type	

3. 5. Packing Specification

Weight Of Bare Machine	TBD
Total Weight	TBD
Package Size	TBD (L× W× H)

3. 6. Packing List

Thank you for your trust in purchasing our company's products. When you receive the products, please ensure that the outer packaging of the products is intact. If there is any appearance damage or missing accessories, please contact your dealer.

①	All-in-one Machine×1
②	Snap Screw× 4

* The above accessories are for reference only, the actual accessories are subject to the physical, the company reserves the right to modify.

HTDISPLAY

FCC WARNING

This device complies with part 15 of the FCC Rules. Operation is subject to the following two conditions: (1) this device may not cause harmful interference, and (2) this device must accept any interference received, including interference that may cause undesired operation.

Any changes or modifications not expressly approved by the party responsible for compliance could void the user's authority to operate the equipment.

NOTE: This equipment has been tested and found to comply with the limits for a Class B digital device, pursuant to Part 15 of the FCC Rules. These limits are designed to provide reasonable protection against harmful interference in a residential installation. This equipment generates, uses and can radiate radio frequency energy and, if not installed and used in accordance with the instructions, may cause harmful interference to radio communications.

However, there is no guarantee that interference will not occur in a particular installation. If this equipment does cause harmful interference to radio or television reception,

which can be determined by turning the equipment off and on, the user is encouraged to try to correct the interference by one or more of the following measures:

-- Reorient or relocate the receiving antenna.

-- Increase the separation between the equipment and receiver.

-- Connect the equipment into an outlet on a circuit different from that to which the receiver is connected.

-- Consult the dealer or an experienced radio/TV technician for help.

To maintain compliance with FCC’s RF Exposure guidelines, This equipment should be installed and operated with minimum 20cm distance between the radiator and your body: Use only the supplied antenna.