MAGNNOTECH NON-MAG SENSOR

DESCRIPTION

Our design combines Sindcon's expertise in single-chip solutions with LC sensor interface and LoRa communication technology, powered by STMicroelectronics' advanced LoRa SoC. This design is highly compatible with Itron water meters that is equipped with Cyble target. It delivers an incredibly long battery life with up to10 years, as precisely calculated by our battery management system, making it the ideal choice for users who value high-quality and long lasting performance.

FEATURES AND BENEFITS

- Sindcon's unique temperature and drift compensation algorithm is used for the LC sensor.
- Anti-tampering function triggers automatically and sends alarm to system when sensor is away from Cyble target of meter.
- The SoC solution is designed for super-low power consumption, with a battery life of up to 10 years.
- The SoC integrating ARM Cortex-M4 core is capable to realize complex algorithms and functions to meet the needs of different IoT applications.
- Sindcon's unique primary (Li-SOCI2) battery management technology not provides precision usage calculation and loading leakage detection but also keep the battery in health condition across the battery life.
- The casing is designed to be waterproof with an IP68 rating and features a replaceable battery.

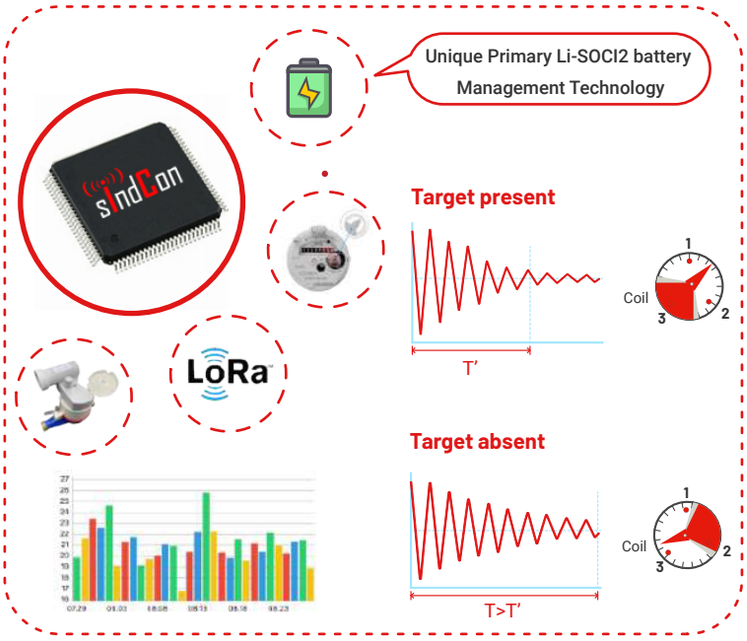

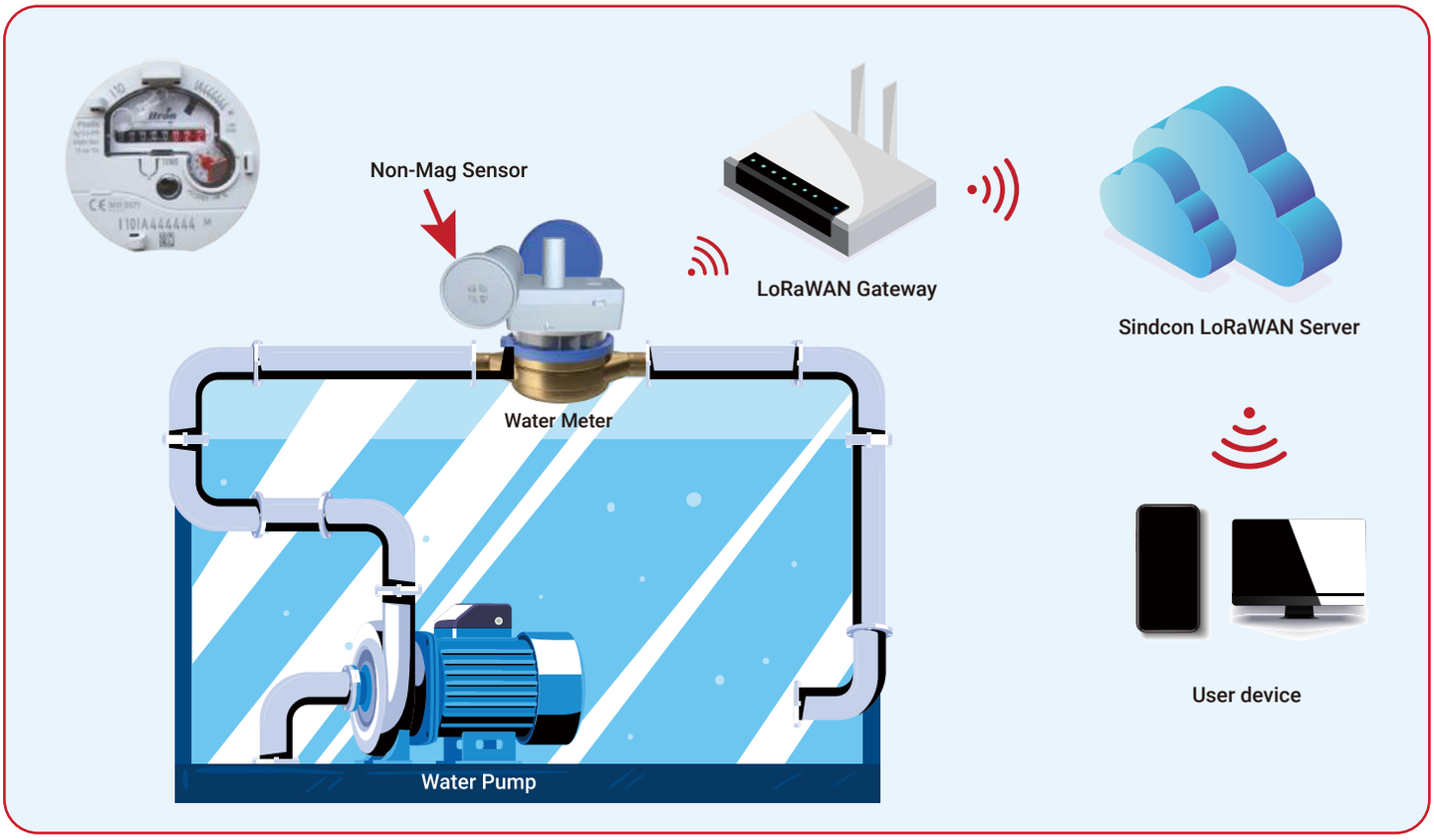

LORA RADIO PARAMETERS

Communication Protocol	LoRaWAN
LoRa MAC Version	1.0.3
Device Type	Class A
Network Registration Way	OTAA, ABP
LoRaWAN Uplink Confirmation	Confirm or Partially Confirm
LoRa Chip	STM32WLE5CCU6
MCU	Arm® 32-bit Cortex®-M4
Memory	256KB Flash; 64KB RAM
ISM Bands	AS923, AU915, EU868
TX Power	Up to 22dBm (Only for CE)
Uplink Channels	8 settable channels with bandwidth of 125kHz (Only for CE)
RX Sensitivity	Down to -125dBm@BW = 125 kHz, SF = 7 (Only for CE)
Spreading Factor	SF7 ~ SF10(Adaptive) (Only for CE)
LBT(Listen Before Talk)	Yes
Report Interval	Configurable via Downlink Commands
Data Cach when LoRa Network Interrupt	Yes
Data Logger in local device	Optional
Communication Distance	3km to 10km (Eyesight distance in open space)
Near Field Communication Way	Infrared Tools (with Sindcon Mobile APP)
Anti-tampering	Yes
Anti-dismantling Alarm Function	Yes

ELECTRICAL PARAMETERS

Power Supply	3.6V (ER26500 8500mAh)
Standby Current	≤70uA
Active Current	≤5mA
TX Current	≤127mA @ 22dBm
Battery Life	Up to 10 years
Battery Usage Monitoring	Accurate Coulomb Measurement
Battery Undervoltage Warning	Yes
MCU Temperature Monitoring	Yes
CPU Working Temperature	-10°C to 60°C
Storage Temperature	-10°C to 60°C

DIMENSION

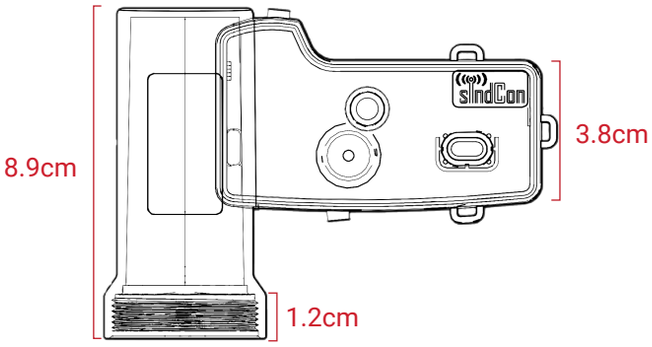

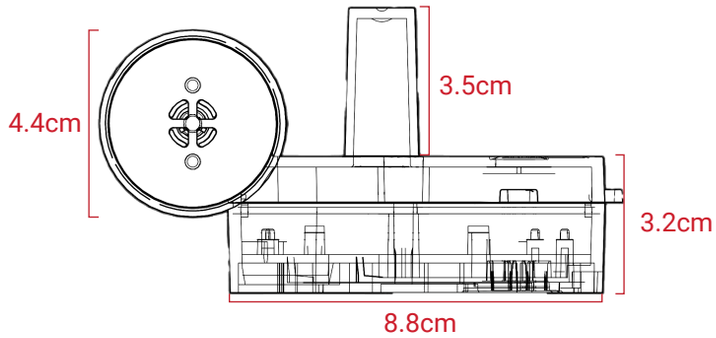

FCC Warning and Radiation Exposure Warning

Any Changes or modifications not expressly approved by the party responsible for compliance could void the user's authority to operate the equipment.

This device complies with part 15 of the FCC Rules. Operation is subject to the following two conditions:

(1) This device may not cause harmful interference, and (2) this device must accept any interference received, including interference that may cause undesired operation.

FCC Radiation Exposure Statement:

This equipment complies with FCC radiation exposure limits set forth for an uncontrolled environment.

sindcon

CONNECTING EVERYTHING

While sindcon strives to make the content of its marketing materials as timely and accurate as possible, sindcon makes no claims, promises,or guarantees about the accuracy, completeness, or adequacy of, and expressly disclaims liability for errors and omissions in, such materials. No warranty of any kind, implied, expressed, or statutory, including but not limited to the warranties of non-infringement of third party rights, title, merchantability, and fi tness for a particular purpose, is given with respect to the content of these marketing materials.

7 Tampines Industrial Drive, #03-01 Zulin Building, Singapore 528547

+65 69095529

sales@sindcon.com.sg

www.sindcon.com.sg