Xtreme Radar

User Manual

XDT

XTREME DIGITAL TRAINING

Overview

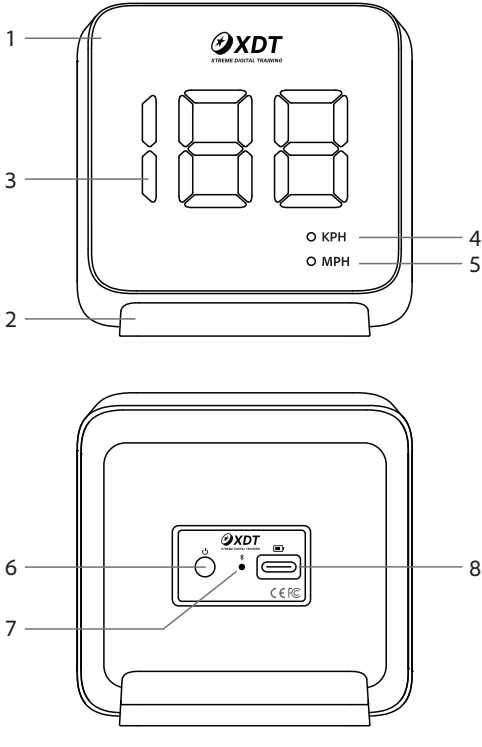

1. XDT Radar
2. XDT Radar Footplate
3. MAIN LED-Lights
4. KPH Indication light
5. MPH Indication light
6. Power/Switch Button
7. Status LED
8. Charging Port (USB-C)

Package Content

1 x Radar
1 x Radar footplate
4 x screws
1 x hex key
1 x USB-C charging cable
1 x Quick-start guide & user manual

Assembly Instruction

Using the hex key, attach the radar footplate
with the remaining screws provided.

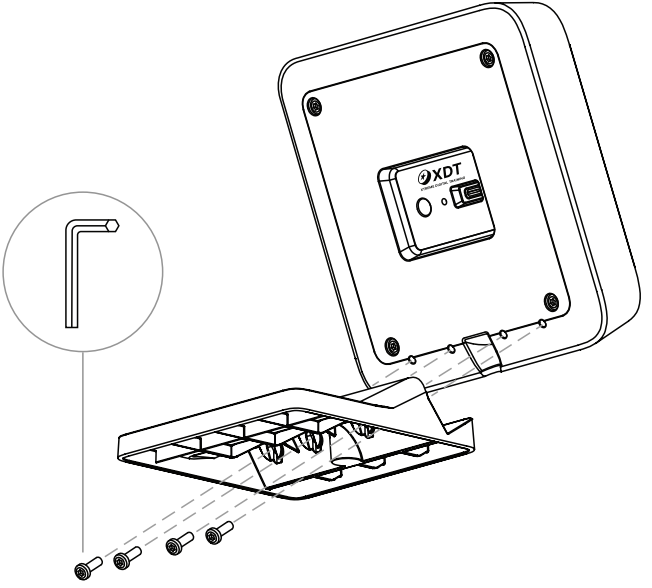

Quick start guide

Step 1
Press and hold the button to power on. The radar LED will turn on shortly to indicate standalone mode.

Step 2 (optional)
Change between kilometers per hour (KMH) and miles per hour (MPH) by pressing the power button 2 times shortly.

Step 3
Place the radar 0,5 meters centrally behind the goal, or 0,5 meters right/left of the goal post

Step 4
Start shooting! The radar will show the registered speed for 5 seconds.

Charging

To charge XDT Radar, connect a USB adapter (not included) to the charging port using the power cable. The battery is fully charged when the battery indicator turns off.

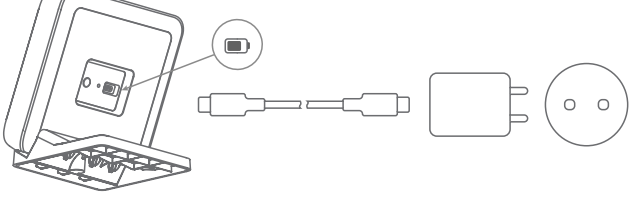

Safety considerations

- The product is not recommended for use by children under 8 years of age.
- Read instructions thoroughly and keep for future reference.
- This device contains electrical equipment that could cause injury if not handled properly.
- This toy contains a battery that is non-replaceable. Do not attempt to replace the battery or open the enclosure or disassemble the device. Doing so can result in a safety hazard and will void the warranty.
- Changes or modifications to this unit not expressly approved by the party responsible for compliance could void the user's authority to operate the equipment.
- Do not use the device if it is damaged. Substances in the device and its battery may harm the environment or cause injury if handled or disposed improperly.
- Do not dispose the device in a fire. The battery could explode.
- Do not expose the device to extremely high or low temperatures or heavy rain.
- The device is water splash-proof only (IPX4). Do not immerse in water.
- Store the product in a dry and moisture free environment.
- Keep a safe distance to other people and objects. Collision hazard. Use of 1 or more devices by several people within the same playing area can cause serious injuries.
- Usage of the device while under the influence of alcohol or drugs is prohibited.
- Do not charge the device while it is wet.
- Do not use the device while charging it.

Caution

- Disposal of a battery into fire or a hot oven, mechanically crushing or cutting, can result in an explosion.
- Leaving a battery in an extremely high temperature environment can result in explosion, leakage of flammable liquid or gas.
- A battery subjected to extremely low air pressure may result in explosion, leakage of flammable liquid or gas.
- Regularly check for damage to the power cable, charging port, device sealing condition, and in the event of damage, it shall not be used until the damage is repaired.

Maintenance

Clean the product with a soft, moist cloth after each use, and regularly check for visible damage or changes. Do not use solvents, detergent, soap powder or hot water under any circumstances.

Disposal and recycling information

The symbol on the device and its packaging signifies that this device must be disposed separately from the ordinary household wastes at its end of life because it contains a battery and is electronic equipment. For information about where to recycle contact your local waste disposal authority or the retailer where you bought the device.

Regulatory Information

Federal Communications Commission (FCC) Statement

This device complies with Part 15 of the FCC Rules.
Operation is subject to the following two conditions:
this device may not cause harmful interference, and this device must accept any interference received, including interference that may cause undesired operation.

This equipment has been tested and found to comply with the limits for a Class B digital device, pursuant to Part 15 of the FCC Rules. These limits are designed to provide reasonable protection against harmful interference in a residential installation. This equipment generates, uses and can radiate radio frequency energy and, if not installed and used in accordance with the instructions, may cause harmful interference to radio communications. However, there is no guarantee that interference will not occur in a particular installation.

If this equipment does cause harmful interference to radio or television reception, which can be determined by turning the equipment off and on, the user is encouraged to try to correct the interference by one or more of the following measures:

- Reorient or relocate the receiving antenna.
- Increase the separation between the equipment and receiver.
- Connect the equipment into an outlet on a circuit different from that to which the
- receiver is connected.
- Consult the dealer or an experienced radio/TV technician for help.

FCC ID: 2BHX2BH020124
This equipment complies with FCC radiation exposure limits set forth for an uncontrolled environment. This transmitter must not be co-located or operating in conjunction with any other antenna or transmitter.

CE Statement

Better Hockey is authorized to apply the CE mark on its product, thereby declaring conformity to the essential requirements and other relevant provisions of Directive 2014/53/EU and other applicable Directives.

Frequency bands: 2402-2480MHZ
Maximum output power: 2.70dBm
Frequency bands: 10.525GHz
Maximum output power: 15.96dBm

Warranty

Smart Hockey Radar is subject to a warranty period of 2 years.
To make a warranty claim, please contact our dealer network or customer service by e-mail: info@xtremedigitaltraining.com
The warranty does not include damage caused by:

- Accidents or unforeseeable events (e.g. lightning, flooding, fire, etc.)
- Improper use, transport or storage
- Ignoring safety and maintenance rules
- Any other improper handling or alterations
- Normal wear and tear

Manufacturer

Bethoc AB
Kemistvägen 2A
183 79 Täby
Stockholms län
Sweden

FCC Compliance Statements

This device complies with Part 15 of the FCC Rules. Operation is subject to the following two conditions: (1) this device may not cause harmful interference, and (2) this device must accept any interference received, including interference that may cause undesired operation.

Note: This equipment has been tested and found to comply with the limits for a Class B digital device, pursuant to Part 15 of the FCC Rules. These limits are designed to provide reasonable protection against harmful interference in a residential installation.

This equipment generates, uses and can radiate radio frequency energy and, if not installed and used in accordance with the instructions, may cause harmful interference to radio communications. However, there is no guarantee that interference will not occur in a particular installation.

If this equipment does cause harmful interference to radio or television reception, which can be determined by turning the equipment off and on, the user is encouraged to try to correct the interference by one or more of the following measures:

- Reorient or relocate the receiving antenna.
- Increase the separation between the equipment and receiver.
- Connect the equipment into an outlet on a circuit different from that to which the receiver is connected.
- Consult the dealer or an experienced radio/TV technician for help.

Caution: Changes or modifications not expressly approved by the party responsible for compliance could void the user's authority to operate the equipment.
This equipment complies with FCC radiation exposure limits set forth for an uncontrolled environment. This equipment should be installed and operated with minimum distance 20cm between the radiator and your body.

This description is to meet the requirements of the FCC certification

U.S. Designated Agent：
Company Name: Better Hockey Corporation
Address: 1101 Regina Greater Way, Cincinnati OH 45216 US
Telephone: +1 800 663 9080