RADIO TEST REPORT
FCC ID: 2BHYQ-HCBG01

Product: Bluetooth Gateway

Trade Mark: N/A

Model No.: HCBG01

Family Model: N/A

Report No.: S24072201802001

Issue Date: Aug. 16, 2024

Prepared for

HoneyComm IOT Technology(Shenzhen) Co.,Ltd

Rm 1406, Jingxing Marine Building, No. 91, Guiwan 3rd Rd, Nanshan Str. Shenzhen-Hong Kong Cooperation Zone, Qianhai, Shenzhen, Guangdong, China 518101

Prepared by

Shenzhen NTEK Testing Technology Co., Ltd.

1&5/F, Building C, 1&2/F, Building E, Fenda Science Park, Sanwei Community, Hangcheng Street, Baoan District, Shenzhen ,Guangdong, China

Tel. 400-800-6106, 0755-2320 0050, 0755-2320 0090

Website: http://www.ntek.org.cn

TABLE OF CONTENTS

1 TEST RESULT CERTIFICATION 4

2 SUMMARY OF TEST RESULTS 5

3 FACILITIES AND ACCREDITATIONS 6

3.1 FACILITIES 6
3.2 LABORATORY ACCREDITATIONS AND LISTINGS 6
3.3 MEASUREMENT UNCERTAINTY 6

4 GENERAL DESCRIPTION OF EUT 7

5 DESCRIPTION OF TEST MODES 9

6 SETUP OF EQUIPMENT UNDER TEST 10

6.1 BLOCK DIAGRAM CONFIGURATION OF TEST SYSTEM 10
6.2 SUPPORT EQUIPMENT 11
6.3 EQUIPMENTS LIST FOR ALL TEST ITEMS 12

7 TEST REQUIREMENTS 14

7.1 CONDUCTED EMISSIONS TEST 14
7.1.1 Applicable Standard 14
7.1.2 Conformance Limit 14
7.1.3 Measuring Instruments 14
7.1.4 Test Configuration 14
7.1.5 Test Procedure 14
7.1.6 Test Results 15
7.2 RADIATED SPURIOUS EMISSION 17
7.2.1 Applicable Standard 17
7.2.2 Conformance Limit 17
7.2.3 Measuring Instruments 18
7.2.4 Test Configuration 18
7.2.5 Test Procedure 19
7.2.6 Test Results 20
7.3 6DB BANDWIDTH 26
7.3.1 Applicable Standard 26
7.3.2 Conformance Limit 26
7.3.3 Measuring Instruments 26
7.3.4 Test Setup 26
7.3.5 Test Procedure 26
7.3.6 Test Results 26
7.4 DUTY CYCLE 27
7.4.1 Applicable Standard 27
7.4.2 Conformance Limit 27
7.4.3 Measuring Instruments 27
7.4.4 Test Setup 27
7.4.5 Test Procedure 27
7.4.6 Test Results 28
7.5 PEAK OUTPUT POWER 29
7.5.1 Applicable Standard 29
7.5.2 Conformance Limit 29
7.5.3 Measuring Instruments 29
7.5.4 Test Setup 29
7.5.5 Test Procedure 29
7.5.6 Test Results 29
7.6 POWER SPECTRAL DENSITY 30

7.6.1 Applicable Standard *30*
7.6.2 Conformance Limit *30*
7.6.3 Measuring Instruments *30*
7.6.4 Test Setup *30*
7.6.5 Test Procedure *30*
7.6.6 Test Results *31*
7.7 CONDUCTED BAND EDGE MEASUREMENT 32
7.7.1 Applicable Standard *32*
7.7.2 Conformance Limit *32*
7.7.3 Measuring Instruments *32*
7.7.4 Test Setup *32*
7.7.5 Test Procedure *32*
7.7.6 Test Results *32*
7.8 SPURIOUS RF CONDUCTED EMISSIONS 33
7.8.1 Conformance Limit *33*
7.8.2 Measuring Instruments *33*
7.8.3 Test Setup *33*
7.8.4 Test Procedure *33*
7.8.5 Test Results *33*
7.9 ANTENNA APPLICATION 34
7.9.1 Antenna Requirement *34*
7.9.2 Result *34*

8 TEST RESULTS 35

8.1 DUTY CYCLE 35
8.2 MAXIMUM CONDUCTED OUTPUT POWER 38
8.3 -6DB BANDWIDTH 41
8.4 OCCUPIED CHANNEL BANDWIDTH 44
8.5 MAXIMUM POWER SPECTRAL DENSITY LEVEL 47
8.6 BAND EDGE 50
8.7 CONDUCTED RF SPURIOUS EMISSION 53

1 TEST RESULT CERTIFICATION

Applicant's name .....:	HoneyComm IOT Technology(Shenzhen) Co.,Ltd
Address .....:	Rm 1406, Jingxing Marine Building, No. 91, Guiwan 3rd Rd, Nanshan Str. Shenzhen-Hong Kong Cooperation Zone, Qianhai, Shenzhen, Guangdong, China 518101
Manufacturer's Name .....:	HoneyComm IOT Technology(Shenzhen) Co.,Ltd
Address .....:	Rm 1406, Jingxing Marine Building, No. 91, Guiwan 3rd Rd, Nanshan Str. Shenzhen-Hong Kong Cooperation Zone, Qianhai, Shenzhen, Guangdong, China 518101
Product description	
Product name .....:	Bluetooth Gateway
Trademark .....:	N/A
Model and/or type reference .....:	HCBG01
Family Model .....:	N/A
Test Sample Number.....	S240722018002
Date of tests .....:	Jul. 22, 2024 ~ Aug. 16, 2024

Measurement Procedure Used:

APPLICABLE STANDARDS	
APPLICABLE STANDARD/ TEST PROCEDURE	TEST RESULT
FCC 47 CFR Part 2, Subpart J FCC 47 CFR Part 15, Subpart C ANSI C63.10-2013 KDB 558074 D01 15.247 Meas Guidance v05r02	Complied

This device described above has been tested by Shenzhen NTEK Testing Technology Co., Ltd., and the test results show that the equipment under test (EUT) is in compliance with the FCC requirements. And it is applicable only to the tested sample identified in the report.
This report shall not be reproduced except in full, without the written approval of Shenzhen NTEK Testing Technology Co., Ltd., this document may be altered or revised by Shenzhen NTEK Testing Technology Co., Ltd., personnel only, and shall be noted in the revision of the document.
The test results of this report relate only to the tested sample identified in this report.

Prepared By:	Reviewed By:	Approved By:
Allen Liu (Project Engineer)	Aaron Cheng (Supervisor)	Alex Li (Manager)

2 SUMMARY OF TEST RESULTS

FCC Part15 (15.247), Subpart C			
Standard Section	**Test Item**	**Verdict**	**Remark**
15.207	Conducted Emission	PASS	
15.247 (a)(2)	6dB Bandwidth	PASS	
15.247 (b)	Peak Output Power	PASS	
15.209 (a) 15.205 (a)	Radiated Spurious Emission	PASS	
15.247 (e)	Power Spectral Density	PASS	
15.247 (d)	Band Edge Emission	PASS	
15.247 (d)	Spurious RF Conducted Emission	PASS	
15.203	Antenna Requirement	PASS	

Remark:
1. "N/A" denotes test is not applicable in this Test Report.
2. All test items were verified and recorded according to the standards and without any deviation during the test.

3 FACILITIES AND ACCREDITATIONS

3.1 FACILITIES

All measurement facilities used to collect the measurement data are located at
1/F, Building E, Fenda Science Park, Sanwei Community, Xixiang Street, Bao'an District, Shenzhen 518126 P.R. China.
The sites are constructed in conformance with the requirements of ANSI C63.7, ANSI C63.10 and CISPR Publication 22.

3.2 LABORATORY ACCREDITATIONS AND LISTINGS

Site Description

CNAS-Lab.	:	The Certificate Registration Number is L5516.
IC-Registration		The Certificate Registration Number is 9270A. CAB identifier:CN0074
FCC- Accredited		Test Firm Registration Number: 463705. Designation Number: CN1184
A2LA-Lab.		The Certificate Registration Number is 4298.01 This laboratory is accredited in accordance with the recognized International Standard ISO/IEC 17025:2005 General requirements for the competence of testing and calibration laboratories. This accreditation demonstrates technical competence for a defined scope and the operation of a laboratory quality management system (refer to joint ISO-ILAC-IAF Communiqué dated 8 January 2009).
Name of Firm	:	Shenzhen NTEK Testing Technology Co., Ltd.
Site Location	:	1/F, Building E, Fenda Science Park, Sanwei Community, Xixiang Street, Bao'an District, Shenzhen 518126 P.R. China.

3.3 MEASUREMENT UNCERTAINTY

The reported uncertainty of measurement y±U, where expended uncertainty U is based on a standard uncertainty multiplied by a coverage factor of k=2, providing a level of confidence of approximately 95 %.

No.	Item	Uncertainty
1	Conducted Emission Test	±2.80dB
2	RF power, conducted	±0.16dB
3	Spurious emissions, conducted	±0.21dB
4	All emissions, radiated(30MHz~1GHz)	±2.64dB
5	All emissions, radiated(1GHz~6GHz)	±2.40dB
6	All emissions, radiated(＞6GHz)	±2.52dB
7	Temperature	±0.5°C
8	Humidity	±2%
9	All emissions, radiated(9KHz~30MHz)	±6dB
10	Occupied bandwidth	±3.7%

4 GENERAL DESCRIPTION OF EUT

Product Feature and Specification	
Equipment	Bluetooth Gateway
Trade Mark	N/A
FCC ID	2BHYQ-HCBG01
Model No.	HCBG01
Family Model	N/A
Model Difference	N/A
Operating Frequency	2402MHz~2480MHz
Modulation	GFSK
Number of Channels	40 Channels
Antenna Type	FPC Antenna
Antenna Gain	4.66 dBi
Adapter	MODEL: GFDQ3L-1201000U INPUT: AC 100-240V, 50/60Hz, 0.3A Max OUTPUT:12V⎓1A
Battery	N/A
Rating	DC 12V from Adapter AC 120V/60Hz
HW Version	V2.5
FW Version	WiFi module: KLB0003_V4.3.9 Bluetooth module: KLB0012_V4.2.3
SW Version	N/A

Note 1: Based on the application, features, or specification exhibited in User's Manual, the EUT is considered as an ITE/Computing Device. More details of EUT technical specification, please refer to the User's Manual.

Revision History

Report No.	Version	Description	Issued Date
S24072201802001	Rev.01	Initial issue of report	Aug. 16, 2024

5 DESCRIPTION OF TEST MODES

To investigate the maximum EMI emission characteristics generates from EUT, the test system was pre-scanning tested base on the consideration of following EUT operation mode or test configuration mode which possible have effect on EMI emission level. Each of these EUT operation mode(s) or test configuration mode(s) mentioned above was evaluated respectively.

The Transmitter was operated in the normal operating mode. The TX frequency was fixed which was for the purpose of the measurements.

Test of channel included the lowest and middle and highest frequency to perform the test, then record on this report.

Those data rates (1Mbps for GFSK modulation) were used for all test.

The EUT was pretested with 3 orientations placed on the table for the radiated emission measurement –X, Y, and Z-plane. The X-plane results were found as the worst case and were shown in this report.

Carrier Frequency and Channel list:

Channel	Frequency(MHz)
0	2402
1	2404
…	…
19	2440
20	2442
…	…
38	2478
39	2480

Note: fc=2402MHz+k×2MHz k=0 to 39

The following summary table is showing all test modes to demonstrate in compliance with the standard.

Test Cases	
Test Item	Data Rate/ Modulation
AC Conducted Emission	Mode 1: normal link mode
Radiated Test Cases	Mode 1: normal link mode
	Mode 2: GFSK Tx Ch00_2402MHz_1Mbps
	Mode 3: GFSK Tx Ch19_2440MHz_1Mbps
	Mode 4: GFSK Tx Ch39_2480MHz_1Mbps
Conducted Test Cases	Mode 2: GFSK Tx Ch00_2402MHz_1Mbps
	Mode 3: GFSK Tx Ch19_2440MHz_1Mbps
	Mode 4: GFSK Tx Ch39_2480MHz_1Mbps

Note:
1. The engineering test program was provided and the EUT was programmed to be in continuously transmitting mode.
2. AC power line Conducted Emission was tested under maximum output power.

6 SETUP OF EQUIPMENT UNDER TEST

6.1 BLOCK DIAGRAM CONFIGURATION OF TEST SYSTEM

For AC Conducted Emission Mode

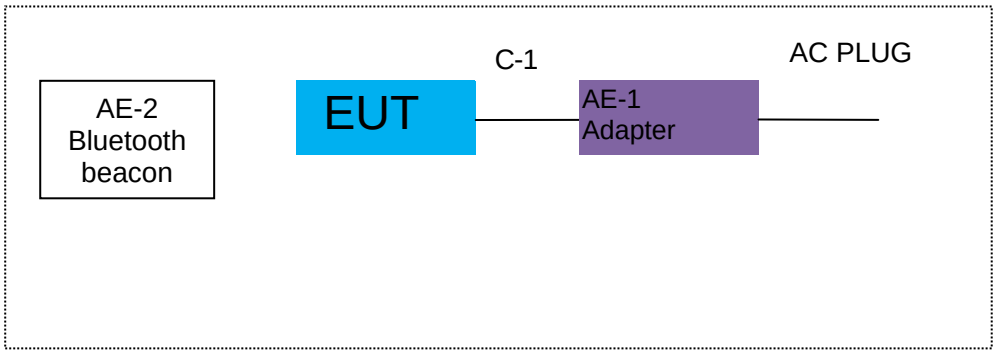

For Radiated Test Cases

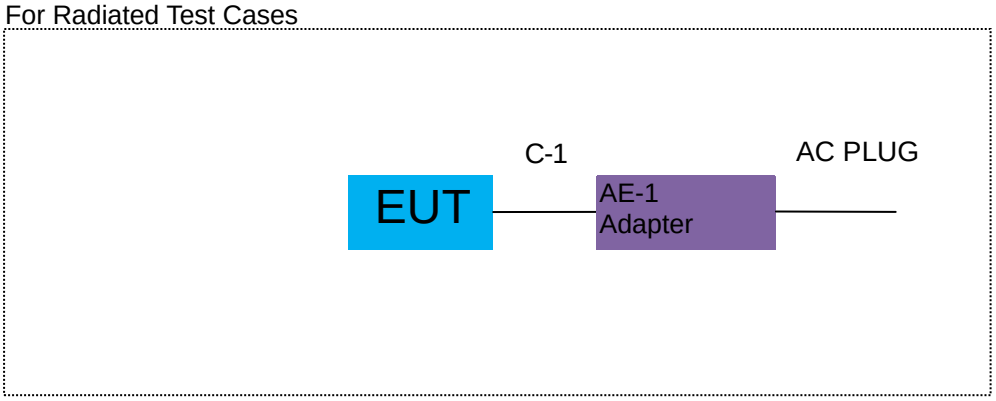

For Conducted Test Cases

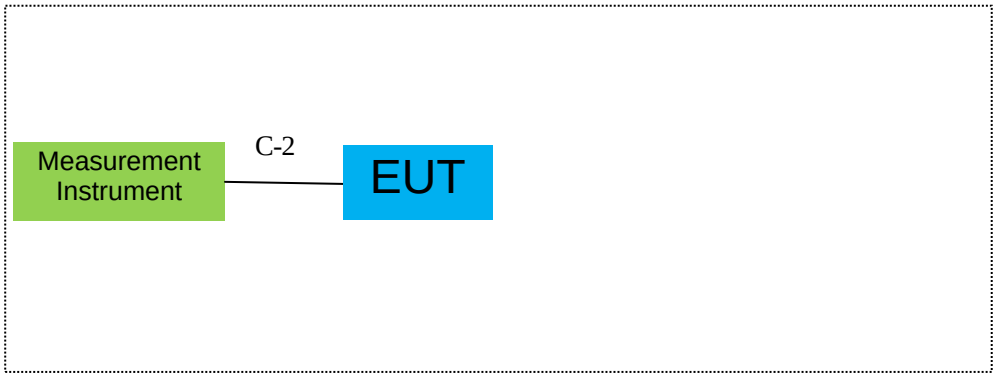

Note: The temporary antenna connector is soldered on the PCB board in order to perform conducted tests and this temporary antenna connector is listed in the equipment list.

6.2 SUPPORT EQUIPMENT

The EUT has been tested as an independent unit together with other necessary accessories or support units. The following support units or accessories were used to form a representative test configuration during the tests.

Item	Equipment	Model/Type No.	Series No.	Note
AE-1	Adapter	GFDQ3L-1201000U	N/A	Peripherals
AE-2	Bluetooth beacon	N/A	N/A	Peripherals

Item	Cable Type	Shielded Type	Ferrite Core	Length
C-1	Power Cable	YES	NO	1.4m
C-2	RF Cable	YES	NO	0.1m

Notes:

(1) The support equipment was authorized by Declaration of Confirmation.
(2) For detachable type I/O cable should be specified the length in cm in『Length』column.
(3) “YES” is means “shielded” “with core”; “NO” is means “unshielded” “without core”.

6.3 EQUIPMENTS LIST FOR ALL TEST ITEMS

Radiation& Conducted Test equipment

	Kind of Equipment	Manufacturer	Type No.	Serial No.	Last calibration	Calibrated until	Calibration period
1	Spectrum Analyzer	Aglient	E4440A	MY41000130	2024.03.12	2025.03.11	1 year
2	Spectrum Analyzer	Agilent	N9020A	MY49100060	2024.04.26	2025.04.25	1 year
3	Spectrum Analyzer	R&S	FSV40	101417	2024.04.26	2025.04.25	1 year
4	Test Receiver	R&S	ESPI7	101318	2024.03.12	2025.03.11	1 year
5	Bilog Antenna	TESEQ	CBL6111D	31216	2024.03.11	2025.03.10	1 year
6	50Ω Coaxial Switch	Anritsu	MP59B	6200983705	2023.05.06	2026.05.05	3 year
7	Horn Antenna	SCHWARZBECK	BBHA 9120 D	2816	2023.01.12	2026.01.11	3 year
8	Broadband Horn Antenna	SCHWARZBECK	BBHA 9170	803	2022.11.07	2025.11.06	3 year
9	Amplifier	EMC	EMC051835 SE	980246	2024.01.23	2025.01.22	1 year
10	Active Loop Antenna	SCHWARZBECK	FMZB 1519 B	055	2023.11.03	2026.11.02	3 year
11	Power Meter	DARE	RPR3006W	15I00041SNO84	2024.04.25	2025.04.24	1 year
12	Test Cable (9KHz-30MHz)	N/A	R-01	N/A	2022.06.17	2025.06.16	3 year
13	Test Cable (30MHz-1GHz)	N/A	R-02	N/A	2022.06.17	2025.06.16	3 year
14	High Test Cable(1G-40GHz)	N/A	R-03	N/A	2022.06.17	2025.06.16	3 year
15	Filter	TRILTHIC	2400MHz	29	2023.03.26	2026.03.25	3 year
16	temporary antenna connector (Note)	NTS	R001	N/A	N/A	N/A	N/A

Note:
We will use the temporary antenna connector (soldered on the PCB board) When conducted test
And this temporary antenna connector is listed within the instrument list

AC Conduction Test equipment

Item	Kind of Equipment	Manufacturer	Type No.	Serial No.	Last calibration	Calibrated until	Calibration period
1	Test Receiver	R&S	ESCI	101160	2024.03.12	2025.03.11	1 year
2	LISN	R&S	ENV216	101313	2024.03.12	2025.03.11	1 year
3	LISN	SCHWARZBECK	NNLK 8129	8129245	2024.03.12	2025.03.11	1 year
4	50Ω Coaxial Switch	ANRITSU CORP	MP59B	6200983704	2023.05.06	2026.05.05	3 year
5	Test Cable (9KHz-30MHz)	N/A	C01	N/A	2023.05.06	2026.05.05	3 year
6	Test Cable (9KHz-30MHz)	N/A	C02	N/A	2023.05.06	2026.05.05	3 year
7	Test Cable (9KHz-30MHz)	N/A	C03	N/A	2023.05.06	2026.05.05	3 year

Note: Each piece of equipment is scheduled for calibration once a year except the Aux Equipment & Test Cable which is scheduled for calibration every 2 or 3 years.

7 TEST REQUIREMENTS

7.1 CONDUCTED EMISSIONS TEST

7.1.1 Applicable Standard

According to FCC Part 15.207(a)

7.1.2 Conformance Limit

Frequency(MHz)	Conducted Emission Limit	
	Quasi-peak	Average
0.15-0.5	66-56*	56-46*
0.5-5.0	56	46
5.0-30.0	60	50

Note: 1. *Decreases with the logarithm of the frequency
2. The lower limit shall apply at the transition frequencies
3. The limit decreases in line with the logarithm of the frequency in the range of 0.15 to 0.50MHz.

7.1.3 Measuring Instruments

The Measuring equipment is listed in the section 6.3 of this test report.

7.1.4 Test Configuration

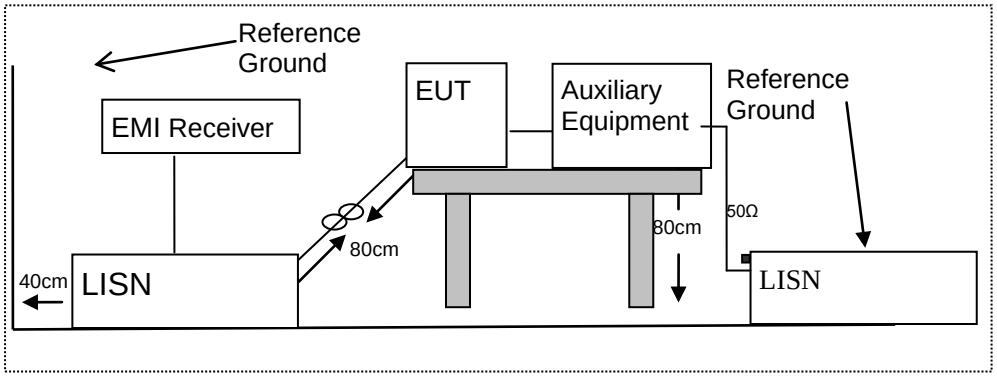

7.1.5 Test Procedure

According to the requirements in Section 13.1.4.1 of ANSI C63.10-2013 Conducted emissions the EUT measured in the frequency range between 0.15 MHz and 30 MHz using CISPR Quasi-Peak and average detector mode.

1. The EUT was placed 0.4 meter from the conducting wall of the shielding room.
2. The EUT was placed on a table which is 0.8m above ground plane.
3. Connect EUT to the power mains through a line impedance stabilization network (LISN). All other support equipments powered from additional LISN(s). The LISN provide 50 Ohm/ 50uH of coupling impedance for the measuring instrument.
4. Interconnecting cables that hang closer than 40 cm to the ground plane shall be folded back and forth in the center forming a bundle 30 to 40cm long.
5. I/O cables that are not connected to a peripheral shall be bundled in the center. The end of the cable may be terminated, if required, using the correct terminating impedance. The overall length shall not exceed 1 m.
6. LISN at least 80 cm from nearest part of EUT chassis.
7. The frequency range from 150KHz to 30MHz was searched.
8. Set the test-receiver system to Peak Detect Function and specified bandwidth(IF bandwidth=9KHz) with Maximum Hold Mode
9. For the actual test configuration, please refer to the related Item –EUT Test Photos.

7.1.6 Test Results

EUT:	Bluetooth Gateway	Model Name :	HCBG01
Temperature:	22 ℃	Relative Humidity:	57%
Pressure:	1010hPa	Phase :	L
Test Voltage :	DC 12V from Adapter AC 120V/60Hz	Test Mode:	Mode 1

Frequency (MHz)	Reading Level (dBμV)	Correct Factor (dB)	Measure-ment (dBμV)	Limits (dBμV)	Margin (dB)	Remark
0.1620	35.88	10.75	46.63	65.36	-18.73	QP
0.1620	28.26	10.75	39.01	55.36	-16.35	AVG
0.3620	31.01	11.18	42.19	58.68	-16.49	QP
0.3620	19.77	11.18	30.95	48.68	-17.73	AVG
0.5940	28.39	11.37	39.76	56.00	-16.24	QP
0.5940	14.27	11.37	25.64	46.00	-20.36	AVG
2.4180	15.41	10.37	25.78	56.00	-30.22	QP
2.4180	-0.36	10.37	10.01	46.00	-35.99	AVG
13.3580	29.34	10.48	39.82	60.00	-20.18	QP
13.3580	22.94	10.48	33.42	50.00	-16.58	AVG
26.6100	30.31	10.46	40.77	60.00	-19.23	QP
26.6100	26.19	10.46	36.65	50.00	-13.35	AVG

Remark:

1. All readings are Quasi-Peak and Average values.
2. Factor = Insertion Loss + Cable Loss.

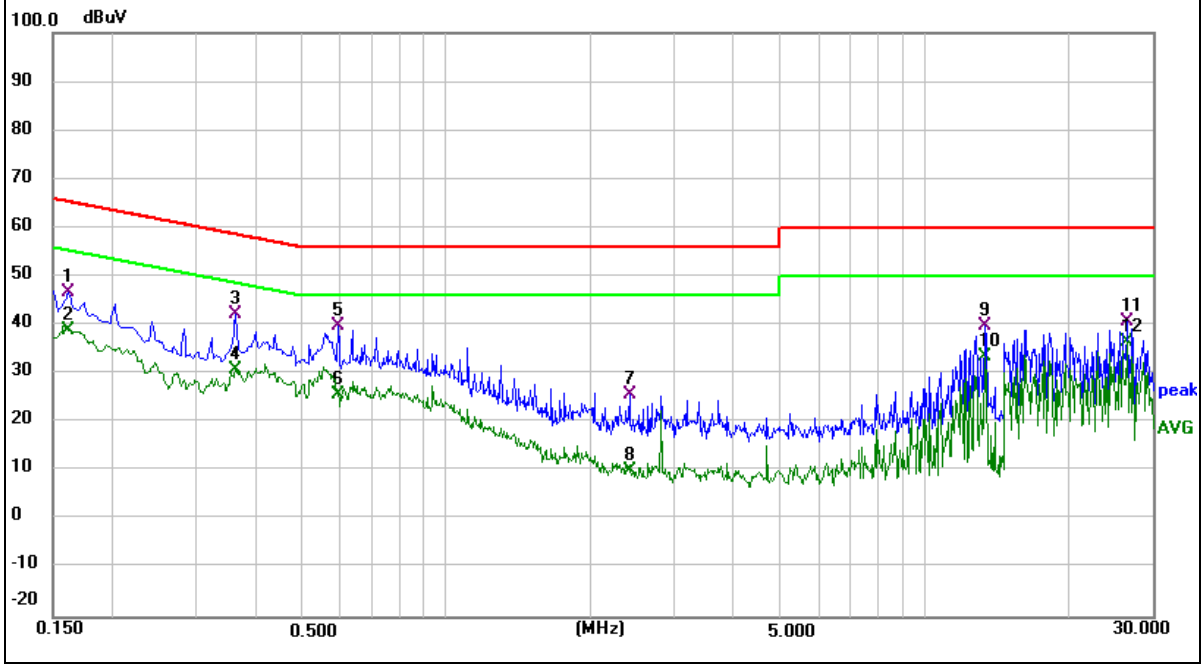

EUT：	Bluetooth Gateway	Model Name ：	HCBG01
Temperature：	22℃	Relative Humidity：	57%
Pressure：	1010hPa	Phase :	N
Test Voltage ：	DC 12V from Adapter AC 120V/60Hz	Test Mode：	Mode 1

Frequency (MHz)	Reading Level (dBμV)	Correct Factor (dB)	Measure-ment (dBμV)	Limits (dBμV)	Margin (dB)	Remark
0.1819	34.35	10.88	45.23	64.40	-19.17	QP
0.1819	26.13	10.88	37.01	54.40	-17.39	AVG
0.3712	29.82	11.19	41.01	58.47	-17.46	QP
0.3712	16.61	11.19	27.80	48.47	-20.67	AVG
0.7700	25.04	12.05	37.09	56.00	-18.91	QP
0.7700	13.20	12.05	25.25	46.00	-20.75	AVG
2.8100	16.43	10.41	26.84	56.00	-29.16	QP
2.8100	12.34	10.41	22.75	46.00	-23.25	AVG
16.2300	29.87	10.61	40.48	60.00	-19.52	QP
16.2300	17.33	10.61	27.94	50.00	-22.06	AVG
26.6100	29.67	10.46	40.13	60.00	-19.87	QP
26.6100	24.83	10.46	35.29	50.00	-14.71	AVG

Remark:

1. All readings are Quasi-Peak and Average values.
2. Factor = Insertion Loss + Cable Loss.

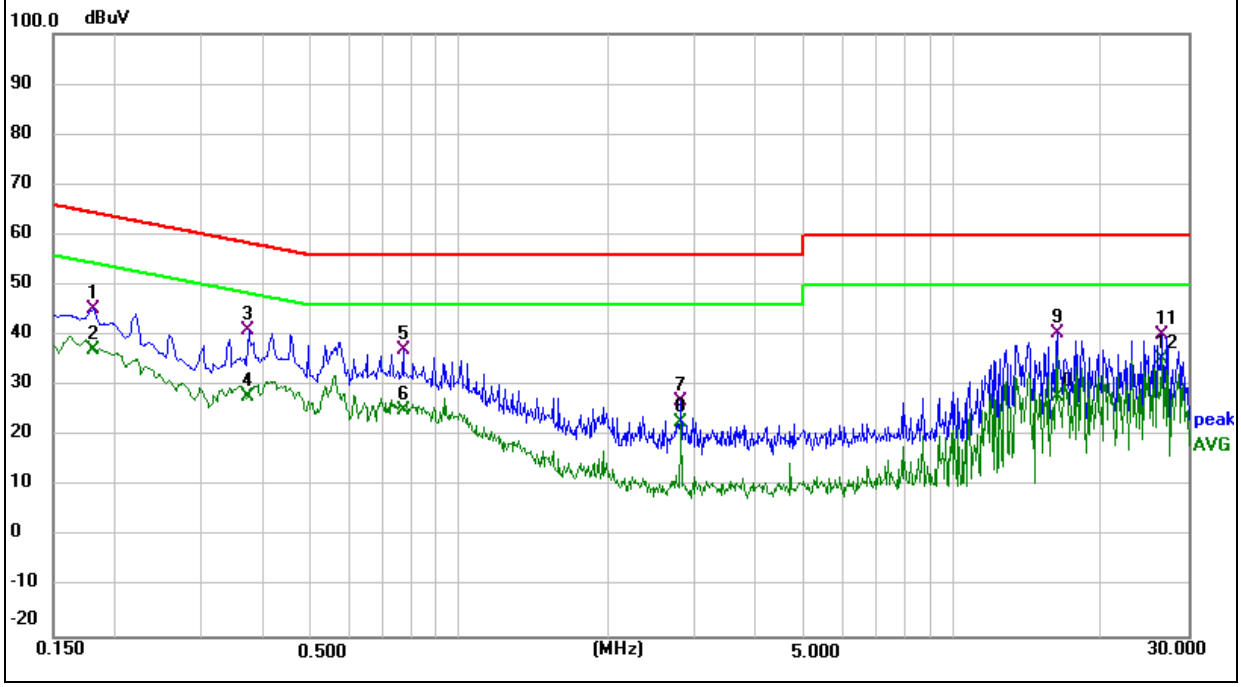

7.2 RADIATED SPURIOUS EMISSION

7.2.1 Applicable Standard

According to FCC Part 15.247(d) and 15.209 and ANSI C63.10-2013

7.2.2 Conformance Limit

According to FCC Part 15.247(d): radiated emissions which fall in the restricted bands, as defined in §15.205(a), must also comply with the radiated emission limits specified in §15.209(a) (see §15.205(c)).
According to FCC Part15.205, Restricted bands

MHz	MHz	MHz	GHz
0.090-0.110	16.42-16.423	399.9-410	4.5-5.15
0.495-0.505	16.69475-16.69525	608-614	5.35-5.46
2.1735-2.1905	16.80425-16.80475	960-1240	7.25-7.75
4.125-4.128	25.5-25.67	1300-1427	8.025-8.5
4.17725-4.17775	37.5-38.25	1435-1626.5	9.0-9.2
4.20725-4.20775	73-74.6	1645.5-1646.5	9.3-9.5
6.215-6.218	74.8-75.2	1660-1710	10.6-12.7
6.26775-6.26825	123-138	2200-2300	14.47-14.5
8.291-8.294	149.9-150.05	2310-2390	15.35-16.2
8.362-8.366	156.52475-156.52525	2483.5-2500	17.7-21.4
8.37625-8.38675	156.7-156.9	2690-2900	22.01-23.12
8.41425-8.41475	162.0125-167.17	3260-3267	23.6-24.0
12.29-12.293	167.72-173.2	3332-3339	31.2-31.8
12.51975-12.52025	240-285	3345.8-3358	36.43-36.5
12.57675-12.57725	322-335.4	3600-4400	(2)
13.36-13.41			

20dBc in any 100 kHz bandwidth outside the operating frequency band. In case the emission fall within the restricted band specified on 15.205(a), then the 15.209(a) limit in the table below has to be followed.

Restricted Frequency(MHz)	Field Strength (μV/m)	Field Strength (dBμV/m)	Measurement Distance
0.009~0.490	2400/F(KHz)	20 log (uV/m)	300
0.490~1.705	24000/F(KHz)	20 log (uV/m)	30
1.705~30.0	30	29.5	30
30-88	100	40	3
88-216	150	43.5	3
216-960	200	46	3
Above 960	500	54	3

Limits of Radiated Emission Measurement(Above 1000MHz)

Frequency(MHz)	Class B (dBuV/m) (at 3M)	
	PEAK	AVERAGE
Above 1000	74	54

Remark :1. Emission level in dBuV/m=20 log (uV/m)
2. Measurement was performed at an antenna to the closed point of EUT distance of meters.
3. For Frequency 9kHz~30MHz: Distance extrapolation factor =40log(Specific distance/ test distance)(dB); Limit line=Specific limits(dBuV) + distance extrapolation factor.
For Frequency above 30MHz: Distance extrapolation factor =20log(Specific distance/ test distance)(dB);
Limit line=Specific limits(dBuV) + distance extrapolation factor.

7.2.3 Measuring Instruments

The Measuring equipment is listed in the section 6.3 of this test report.

7.2.4 Test Configuration

(a) For radiated emissions below 30MHz

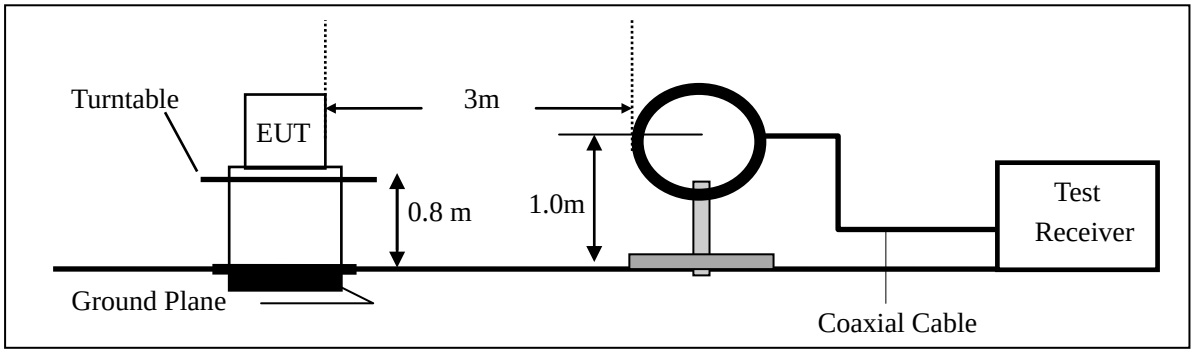

(b) For radiated emissions from 30MHz to 1000MHz

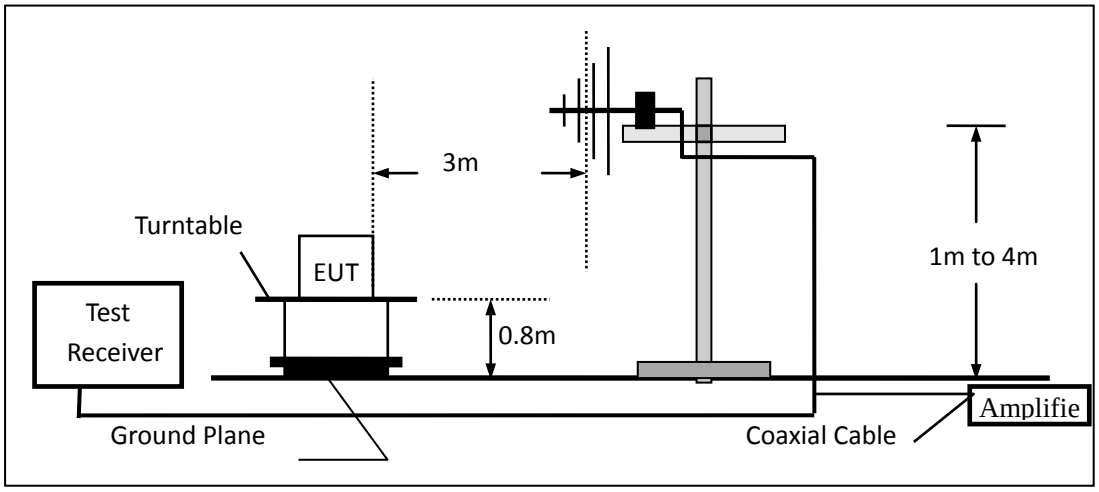

(c) For radiated emissions above 1000MHz

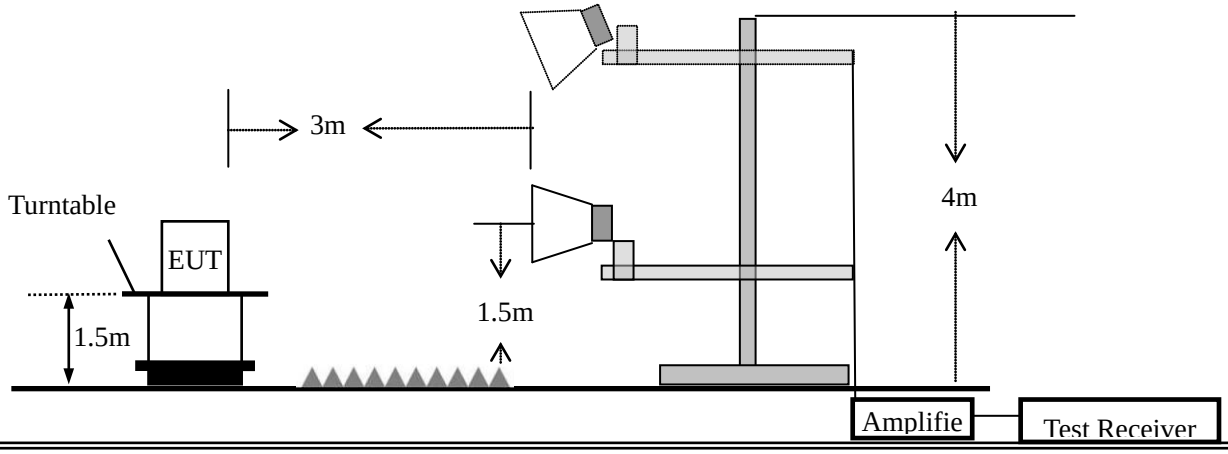

7.2.5 Test Procedure

The test site semi-anechoic chamber has met the requirement of NSA tolerance 4 dB according to the standards: ANSI C63.10-2013. The test distance is 3m.The setup is according to the requirements in Section 13.1.4.1 of ANSI C63.10-2013 and CAN/CSA-CEI/IEC CISPR 22.
This test is required for any spurious emission that falls in a Restricted Band, as defined in Section 15.205. It must be performed with the highest gain of each type of antenna proposed for use with the EUT.
Use the following spectrum analyzer settings:

Spectrum Parameter	Setting
Attenuation	Auto
Start Frequency	1000 MHz
Stop Frequency	10th carrier harmonic
RB / VB (emission in restricted band)	1 MHz / 1 MHz for Peak, 1 MHz / 1MHz for Average

Receiver Parameter	Setting
Attenuation	Auto
Start ~ Stop Frequency	9kHz~150kHz / RB 200Hz for QP
Start ~ Stop Frequency	150kHz~30MHz / RB 9kHz for QP
Start ~ Stop Frequency	30MHz~1000MHz / RB 120kHz for QP

a. The measuring distance of at 3 m shall be used for measurements at frequency up to 1GHz. For frequencies above 1GHz, any suitable measuring distance may be used.
b. The EUT was placed on the top of a rotating table 0.8 m for below 1GHz and 1.5m for above 1GHz the ground at a 3 meter. The table was rotated 360 degrees to determine the position of the highest radiation.
c. The height of the equipment or of the substitution antenna shall be 0.8 m for below 1GHz and 1.5m for above 1GHz; the height of the test antenna shall vary between 1 m to 4 m. Both horizontal and vertical polarizations of the antenna are set to make the measurement.
d. For the radiated emission test above 1GHz:
Place the measurement antenna away from each area of the EUT determined to be a source of emissions at the specified measurement distance, while keeping the measurement antenna aimed at the source of emissions at each frequency of significant emissions, with polarization oriented for maximum response. The measurement antenna may have to be higher or lower than the EUT, depending on the radiation pattern of the emission and staying aimed at the emission source for receiving the maximum signal. The final measurement antenna elevation shall be that which maximizes the emissions. The measurement antenna elevation for maximum emissions shall be restricted to a range of heights of from 1 m to 4 m above the ground or reference ground plane.
e. The initial step in collecting conducted emission data is a spectrum analyzer peak detector mode pre-scanning the measurement frequency range. Significant peaks are then marked and then Quasi Peak detector mode re-measured.
f. If the Peak Mode measured value compliance with and lower than Quasi Peak Mode Limit, the EUT shall be deemed to meet QP Limits and then no additional QP Mode measurement performed.
g. For the actual test configuration, please refer to the related Item –EUT Test Photos.

Note:

Both horizontal and vertical antenna polarities were tested
and performed pretest to three orthogonal axis. The worst case emissions were reported

During the radiated emission test, the Spectrum Analyzer was set with the following configurations:

Frequency Band (MHz)	Function	Resolution bandwidth	Video Bandwidth
30 to 1000	QP	120 kHz	300 kHz
Above 1000	Peak	1 MHz	1 MHz
	Average	1 MHz	1 MHz

Note: for the frequency ranges below 30 MHz, a narrower RBW is used for these ranges but the measured value should add a RBW correction factor (RBWCF) where RBWCF [dB] =10*lg(100 [kHz]/narrower RBW [kHz]). , the narrower RBW is 1 kHz and RBWCF is 20 dB for the frequency 9 kHz to 150 kHz, and the narrower RBW is 10 kHz and RBWCF is 10 dB for the frequency 150 kHz to 30 MHz.

7.2.6 Test Results

■ Spurious Emission below 30MHz (9KHz to 30MHz)

EUT:	Bluetooth Gateway	Model No.:	HCBG01
Temperature:	20 ℃	Relative Humidity:	48%
Test Mode:	Mode1/Mode2/Mode3/ Mode4	Test By:	Allen Liu

Freq. (MHz)	Ant.Pol. H/V	Emission Level(dBuV/m)		Limit 3m(dBuV/m)		Over(dB)	
		PK	AV	PK	AV	PK	AV
--	--	--	--	--	--	--	--

Note: the amplitude of spurious emission that is attenuated by more than 20dB below the permissible limit has no need to be reported.

■ Spurious Emission below 1GHz (30MHz to 1GHz)
All the modulation modes have been tested, and the worst result was report as below:

EUT：	Bluetooth Gateway	Model Name ：	HCBG01
Temperature：	25 ℃	Relative Humidity：	55%
Pressure：	1010hPa	Test Mode：	Mode 2
Test Voltage ：	DC 12V from Adapter AC 120V/60Hz		

Polar (H/V)	Frequency (MHz)	Meter Reading (dBuV)	Factor (dB)	Emission Level (dBuV/m)	Limits (dBuV/m)	Margin (dB)	Remark
V	98.4866	5.22	17.49	22.71	43.50	-20.79	QP
V	224.5193	6.57	17.90	24.47	46.00	-21.53	QP
V	480.5276	10.64	23.84	34.48	46.00	-11.52	QP
V	616.3718	6.73	26.02	32.75	46.00	-13.25	QP
V	771.4486	8.44	28.63	37.07	46.00	-8.93	QP
V	968.9338	7.55	30.86	38.41	54.00	-15.59	QP

Remark:
Emission Level= Meter Reading+ Factor, Margin= Emission Level - Limit

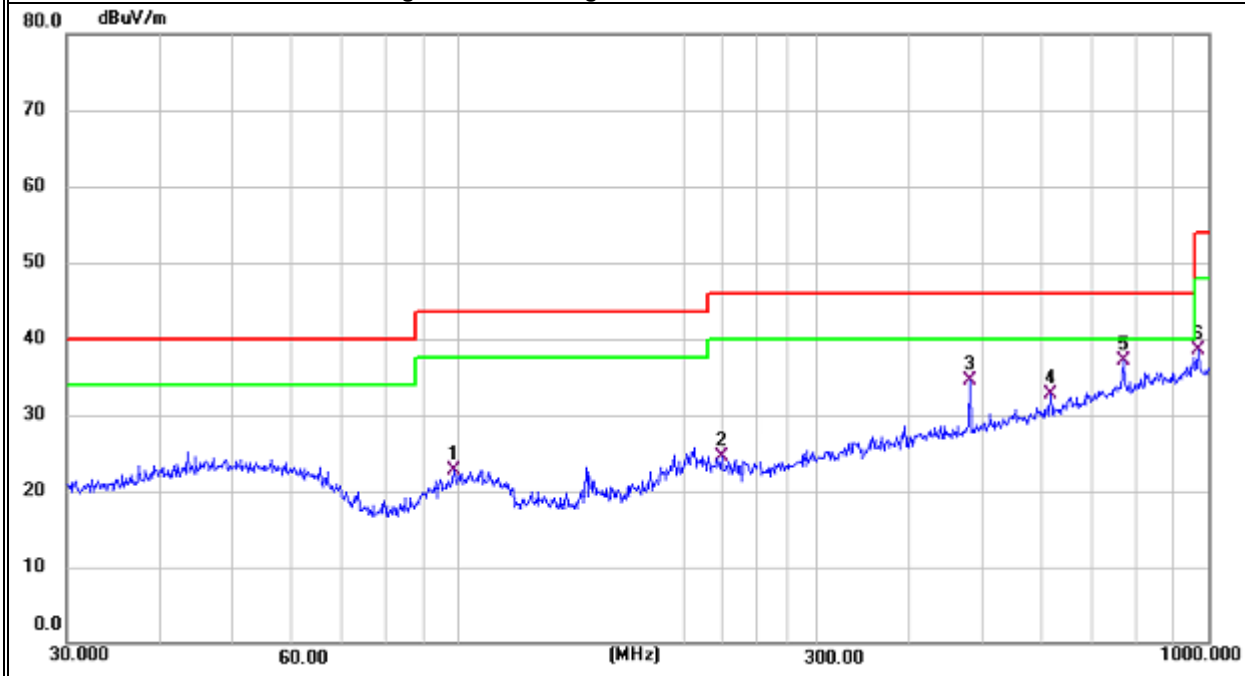

Polar (H/V)	Frequency (MHz)	Meter Reading (dBuV)	Factor (dB)	Emission Level (dBuV/m)	Limits (dBuV/m)	Margin (dB)	Remark
H	38.8878	9.69	18.11	27.80	40.00	-12.20	QP
H	60.7044	8.07	18.54	26.61	40.00	-13.39	QP
H	147.9214	15.50	14.20	29.70	43.50	-13.80	QP
H	214.5143	6.57	17.87	24.44	43.50	-19.06	QP
H	480.5276	12.68	23.84	36.52	46.00	-9.48	QP
H	955.4381	6.16	30.67	36.83	46.00	-9.17	QP

Remark:
Emission Level= Meter Reading+ Factor, Margin= Emission Level - Limit

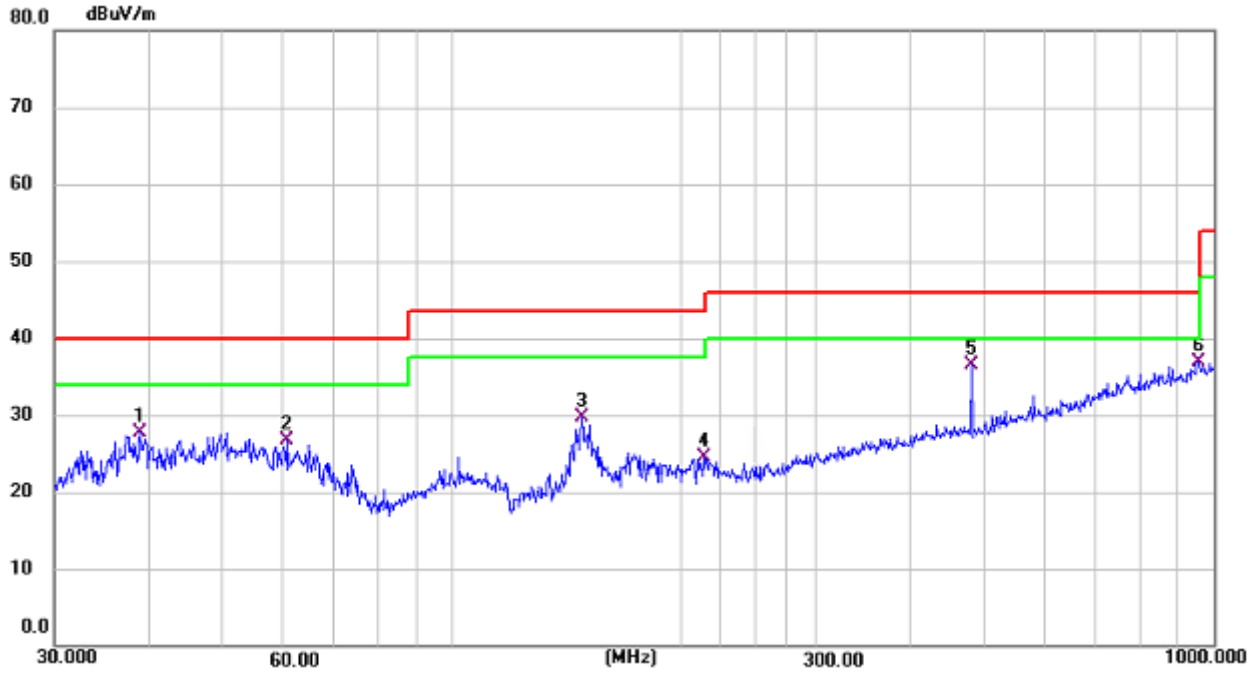

■ Spurious Emission Above 1GHz (1GHz to 25GHz)

EUT:	Bluetooth Gateway	Model No.:	HCBG01
Temperature:	20 ℃	Relative Humidity:	48%
Test Mode:	Mode2/Mode3/Mode4	Test By:	Allen Liu

Frequency (MHz)	Read Level (dBμV)	Cable loss (dB)	Antenna Factor dB/m	Preamp Factor (dB)	Emission Level (dBμV/m)	Limits (dBμV/m)	Margin (dB)	Remark	Comment
Low Channel (2402 MHz)(GFSK)--Above 1G									
4804.338	63.03	5.21	35.59	44.30	59.53	74.00	-14.47	Pk	Vertical
4804.338	42.63	5.21	35.59	44.30	39.13	54.00	-14.87	AV	Vertical
7206.107	61.55	6.48	36.27	44.60	59.70	74.00	-14.30	Pk	Vertical
7206.107	41.89	6.48	36.27	44.60	40.04	54.00	-13.96	AV	Vertical
4804.169	63.27	5.21	35.55	44.30	59.73	74.00	-14.27	Pk	Horizontal
4804.169	43.04	5.21	35.55	44.30	39.50	54.00	-14.50	AV	Horizontal
7206.214	62.43	6.48	36.27	44.52	60.66	74.00	-13.34	Pk	Horizontal
7206.214	42.63	6.48	36.27	44.52	40.86	54.00	-13.14	AV	Horizontal
Mid Channel (2440 MHz)(GFSK)--Above 1G									
4880.473	62.73	5.21	35.66	44.20	59.40	74.00	-14.60	Pk	Vertical
4880.473	43.89	5.21	35.66	44.20	40.56	54.00	-13.44	AV	Vertical
7320.265	65.21	7.10	36.50	44.43	64.38	74.00	-9.62	Pk	Vertical
7320.265	41.24	7.10	36.50	44.43	40.41	54.00	-13.59	AV	Vertical
4880.366	63.52	5.21	35.66	44.20	60.19	74.00	-13.81	Pk	Horizontal
4880.366	40.45	5.21	35.66	44.20	37.12	54.00	-16.88	AV	Horizontal
7320.234	60.20	7.10	36.50	44.43	59.37	74.00	-14.63	Pk	Horizontal
7320.234	45.22	7.10	36.50	44.43	44.39	54.00	-9.61	AV	Horizontal
High Channel (2480 MHz)(GFSK)-- Above 1G									
4960.482	63.78	5.21	35.52	44.21	60.30	74.00	-13.70	Pk	Vertical
4960.482	41.92	5.21	35.52	44.21	38.44	54.00	-15.56	AV	Vertical
7440.131	64.36	7.10	36.53	44.60	63.39	74.00	-10.61	Pk	Vertical
7440.131	48.91	7.10	36.53	44.60	47.94	54.00	-6.06	AV	Vertical
4960.326	64.63	5.21	35.52	44.21	61.15	74.00	-12.85	Pk	Horizontal
4960.326	45.07	5.21	35.52	44.21	41.59	54.00	-12.41	AV	Horizontal
7440.199	64.05	7.10	36.53	44.60	63.08	74.00	-10.92	Pk	Horizontal
7440.199	44.64	7.10	36.53	44.60	43.67	54.00	-10.33	AV	Horizontal

Note:

(1) Emission Level= Antenna Factor + Cable Loss + Read Level - Preamp Factor

(2)All other emissions more than 20dB below the limit.

■ Spurious Emission in Restricted Band 2310-2390MHz and 2483.5-2500MHz

EUT:	Bluetooth Gateway	Model No.:	HCBG01
Temperature:	20 ℃	Relative Humidity:	48%
Test Mode:	Mode2/ Mode4	Test By:	Allen Liu

Frequency	Meter Reading	Cable Loss	Antenna Factor	Preamp Factor	Emission Level	Limits	Margin	Detector	Comment
(MHz)	(dBμV)	(dB)	dB/m	(dB)	(dBμV/m)	(dBμV/m)	(dB)	Type	
1Mbps(GFSK)									
2310.00	63.40	2.97	27.80	43.80	50.37	74	-23.63	Pk	Horizontal
2310.00	42.56	2.97	27.80	43.80	29.53	54	-24.47	AV	Horizontal
2310.00	61.94	2.97	27.80	43.80	48.91	74	-25.09	Pk	Vertical
2310.00	41.51	2.97	27.80	43.80	28.48	54	-25.52	AV	Vertical
2390.00	64.20	3.14	27.21	43.80	50.75	74	-23.25	Pk	Vertical
2390.00	42.20	3.14	27.21	43.80	28.75	54	-25.25	AV	Vertical
2390.00	64.60	3.14	27.21	43.80	51.15	74	-22.85	Pk	Horizontal
2390.00	43.04	3.14	27.21	43.80	29.59	54	-24.41	AV	Horizontal
2483.50	61.86	3.58	27.70	44.00	49.14	74	-24.86	Pk	Vertical
2483.50	44.03	3.58	27.70	44.00	31.31	54	-22.69	AV	Vertical
2483.50	65.93	3.58	27.70	44.00	53.21	74	-20.79	Pk	Horizontal
2483.50	44.44	3.58	27.70	44.00	31.72	54	-22.28	AV	Horizontal

Note: (1) All other emissions more than 20dB below the limit.

■ Spurious Emission in Restricted Band 3260MHz-18000MHz

EUT:	Bluetooth Gateway	Model No.:	HCBG01
Temperature:	20 ℃	Relative Humidity:	48%
Test Mode:	Mode2/ Mode4	Test By:	Allen Liu

Frequency	Reading Level	Cable Loss	Antenna Factor	Preamp Factor	Emission Level	Limits	Margin	Detector	Comment
(MHz)	(dBμV)	(dB)	dB/m	(dB)	(dBμV/m)	(dBμV/m)	(dB)	Type	
3260	64.02	4.04	29.57	44.70	52.93	74	-21.07	Pk	Vertical
3260	57.46	4.04	29.57	44.70	46.37	54	-7.63	AV	Vertical
3260	65.35	4.04	29.57	44.70	54.26	74	-19.74	Pk	Horizontal
3260	57.62	4.04	29.57	44.70	46.53	54	-7.47	AV	Horizontal
3332	64.57	4.26	29.87	44.40	54.30	74	-19.70	Pk	Vertical
3332	57.56	4.26	29.87	44.40	47.29	54	-6.71	AV	Vertical
3332	66.60	4.26	29.87	44.40	56.33	74	-17.67	Pk	Horizontal
3332	53.13	4.26	29.87	44.40	42.86	54	-11.14	AV	Horizontal
17797	45.28	10.99	43.95	43.50	56.72	74	-17.28	Pk	Vertical
17797	34.53	10.99	43.95	43.50	45.97	54	-8.03	AV	Vertical
17788	44.39	11.81	43.69	44.60	55.29	74	-18.71	Pk	Horizontal
17788	36.65	11.81	43.69	44.60	47.55	54	-6.45	AV	Horizontal

Note: (1) All other emissions more than 20dB below the limit.

7.3 6DB BANDWIDTH

7.3.1 Applicable Standard

According to FCC Part 15.247(a)(2) and KDB 558074 D01 15.247 Meas Guidance v05r02 Section 8.2.

7.3.2 Conformance Limit

The minimum permissible 6dB bandwidth is 500 kHz.

7.3.3 Measuring Instruments

The Measuring equipment is listed in the section 6.3 of this test report.

7.3.4 Test Setup

Please refer to Section 6.1 of this test report.

7.3.5 Test Procedure

The testing follows Subclause 11.8 of ANSI C63.10
The RF output of EUT was connected to the spectrum analyzer by RF cable and attenuator.
The path loss was compensated to the results for each measurement.
Set to the maximum power setting and enable the EUT transmit continuously.
The EUT was operating in controlled its channel.
Use the following spectrum analyzer settings:

a) Set RBW = 100 kHz.
b) Set the video bandwidth (VBW) ≥ 3*RBW.
c) Detector = Peak.
d) Trace mode = max hold.
e) Sweep = auto couple.
f) Allow the trace to stabilize.
g) Measure the maximum width of the emission that is constrained by the frequencies associated with the two outermost amplitude points (upper and lower frequencies) that are attenuated by 6 dB relative to the maximum level measured in the fundamental emission.

7.3.6 Test Results

EUT:	Bluetooth Gateway	Model No.:	HCBG01
Temperature:	20 ℃	Relative Humidity:	48%
Test Mode:	Mode2/Mode3/Mode4	Test By:	Allen Liu

Test data reference attachment.

7.4 DUTY CYCLE

7.4.1 Applicable Standard

According to KDB 558074 D01 15.247 Meas Guidance v05r02s Section 6.

7.4.2 Conformance Limit

No limit requirement.

7.4.3 Measuring Instruments

The Measuring equipment is listed in the section 6.3 of this test report.

7.4.4 Test Setup

Please refer to Section 6.1 of this test report.

7.4.5 Test Procedure

The zero-span mode on a spectrum analyzer or EMI receiver if the response time and spacing between bins on the sweep are sufficient to permit accurate measurements of the on and off times of the transmitted signal. Set the center frequency of the instrument to the center frequency of the transmission. Set RBW ≥ OBW if possible; otherwise, set RBW to the largest available value. Set VBW ≥ RBW. Set detector = peak or average. The zero-span measurement method shall not be used unless both RBW and VBW are > 50/T and the number of sweep points across duration T exceeds 100. (For example, if VBW and/or RBW are limited to 3 MHz, then the zero-span method of measuring duty cycle shall not be used if T ≤ 16.7 microseconds.)

The transmitter output is connected to the Spectrum Analyzer. We tested accroding to the zero-span measurement method, 6.0)b) in KDB 558074

The largest availble value of RBW is 8 MHz and VBW is 50 MHz. The zero-span method of measuring duty cycle shall not be used if T ≤ 6.25 microseconds. (50/6.25 = 8)

The zero-span method was used because all measured T data are > 6.25 microseconds and both RBW and VBW are > 50/T.

The RF output of EUT was connected to the spectrum analyzer by RF cable and attenuator.
The path loss was compensated to the results for each measurement.
Set to the maximum power setting and enable the EUT transmit continuously.
The EUT was operating in controlled its channel.
Use the following spectrum analyzer settings:
Span = Zero Span
RBW = 8MHz(the largest available value)
VBW = 8MHz (≥ RBW)
Number of points in Sweep >100
Detector function = peak
Trace = Clear write
Measure T_{total} and T_{on}
Calculate Duty Cycle = T_{on} / T_{total}

7.4.6 Test Results

EUT:	Bluetooth Gateway	Model No.:	HCBG01
Temperature:	20 ℃	Relative Humidity:	48%
Test Mode:	Mode2/Mode3/Mode4	Test By:	Allen Liu

Test data reference attachment.

7.5 PEAK OUTPUT POWER

7.5.1 Applicable Standard

According to FCC Part 15.247(b)(3) and KDB 558074 D01 15.247 Meas Guidance v05r02 Section 8.3.1.

7.5.2 Conformance Limit

The maximum peak conducted output power of the intentional radiator for systems using digital modulation in the 2400 - 2483.5 MHz bands shall not exceed: 1 Watt (30dBm). If transmitting antenna of directional gain greater than 6dBi is used, the peak output power from the intentional radiator shall be reduced below the above stated value by the amount in dB that the directional gain of the antenna exceeds 6 dBi. In case of point-to-point operation, the limit has to be reduced by 1dB for every 3dB that the directional gain of the antenna exceeds 6dBi.

7.5.3 Measuring Instruments

The Measuring equipment is listed in the section 6.3 of this test report.

7.5.4 Test Setup

Please refer to Section 6.1 of this test report.

7.5.5 Test Procedure

The testing follows Subclause 11.9.1.1 of ANSI C63.10
The RF output of EUT was connected to the spectrum analyzer by RF cable and attenuator.
The path loss was compensated to the results for each measurement.
Set to the maximum power setting and enable the EUT transmit continuously.
The EUT was operating in controlled its channel.
Use the following spectrum analyzer settings:
Set the RBW ≧DTS bandwidth.
Set VBW =3*RBW.
Set the span ≧3*RBW
Set Sweep time = auto couple.
Set Detector = peak.
Set Trace mode = max hold.
Allow trace to fully stabilize.
Use peak marker function to determine the peak amplitude level.

7.5.6 Test Results

EUT:	Bluetooth Gateway	Model No.:	HCBG01
Temperature:	20 ℃	Relative Humidity:	48%
Test Mode:	Mode2/Mode3/Mode4	Test By:	Allen Liu

Test data reference attachment.

7.6 POWER SPECTRAL DENSITY

7.6.1 Applicable Standard

According to FCC Part 15.247(e) and KDB 558074 D01 15.247 Meas Guidance v05r02 Section 8.4.

7.6.2 Conformance Limit

The transmitter power spectral density conducted from the transmitter to the antenna shall not be greater than 8 dBm in any 3 kHz band during any time interval of continuous transmission.

7.6.3 Measuring Instruments

The Measuring equipment is listed in the section 6.3 of this test report.

7.6.4 Test Setup

Please refer to Section 6.1 of this test report.

7.6.5 Test Procedure

The testing follows Measurement Procedure Subclause 11.10.2 of ANSI C63.10
This procedure shall be used if maximum peak conducted output power was used to demonstrate compliance, and is optional if the maximum conducted (average) output power was used to demonstrate compliance.

The RF output of EUT was connected to the spectrum analyzer by RF cable and attenuator.
The path loss was compensated to the results for each measurement.
Set to the maximum power setting and enable the EUT transmit continuously.
The EUT was operating in controlled its channel.
a) Set analyzer center frequency to DTS channel center frequency.
b) Set the span to 1.5*DTS bandwidth.
c) Set the RBW to: 3 kHz ≤ RBW ≤ 100 kHz.
d) Set the VBW ≥ 3 RBW.
e) Detector = peak.
f) Sweep time = auto couple.
g) Trace mode = max hold.
h) Allow trace to fully stabilize.
i) Use the peak marker function to determine the maximum amplitude level within the RBW.
j) If measured value exceeds limit, reduce RBW (no less than 3 kHz) and repeat.

7.6.6 Test Results

EUT:	Bluetooth Gateway	Model No.:	HCBG01
Temperature:	20 ℃	Relative Humidity:	48%
Test Mode:	Mode2/Mode3/Mode4	Test By:	Allen Liu

Test data reference attachment.

7.7 CONDUCTED BAND EDGE MEASUREMENT

7.7.1 Applicable Standard

According to FCC Part 15.247(d) and KDB 558074 D01 15.247 Meas Guidance v05r02 Section 8.7.

7.7.2 Conformance Limit

In any 100 kHz bandwidth outside the frequency band in which the spread spectrum or digitally modulated intentional radiator is operating, the radio frequency power that is produced by the intentional radiator shall be at least 20 dB below that in the 100 kHz bandwidth within the band that contains the highest level of the desired power, based on either an RF conducted or a radiated measurement, provided the transmitter demonstrates compliance with the peak conducted power limits. If the transmitter complies with the conducted power limits based on the use of RMS averaging over a time interval, as permitted under paragraph (b)(3) of this section, the attenuation required under this paragraph shall be 30 dB instead of 20 dB.

7.7.3 Measuring Instruments

The Measuring equipment is listed in the section 6.3 of this test report.

7.7.4 Test Setup

Please refer to Section 6.1 of this test report.

7.7.5 Test Procedure

The testing follows FCC KDB 558074 D01 15.247 Meas Guidance v05r02 Section 8.7.
The RF output of EUT was connected to the spectrum analyzer by RF cable and attenuator.
The path loss was compensated to the results for each measurement.
Set to the maximum power setting and enable the EUT transmit continuously.
The EUT was operating in controlled its channel.
Set RBW to 100 kHz and VBW of spectrum analyzer to 300 kHz with a convenient frequency span including 100 kHz bandwidth from band edge.
Measure the highest amplitude appearing on spectral display and set it as a reference level. Plot the graph with marking the highest point and edge frequency.
Repeat above procedures until all measured frequencies were complete.

7.7.6 Test Results

EUT:	Bluetooth Gateway	Model No.:	HCBG01
Temperature:	20 ℃	Relative Humidity:	48%
Test Mode:	Mode2/Mode4	Test By:	Allen Liu

Test data reference attachment.

7.8 SPURIOUS RF CONDUCTED EMISSIONS

7.8.1 Conformance Limit

1. Below -20dB of the highest emission level in operating band.
2. Fall in the restricted bands listed in section 15.205. The maximum permitted average field strength is listed in section 15.209.

7.8.2 Measuring Instruments

The Measuring equipment is listed in the section 6.3 of this test report.

7.8.3 Test Setup

Please refer to Section 6.1 of this test report.

7.8.4 Test Procedure

The Spurious RF conducted emissions compliance of RF radiated emission should be measured by following the guidance in ANSI C63.10-2013 with respect to maximizing the emission by rotating the EUT, measuring the emission while the EUT is situated in three orthogonal planes (if appropriate), adjusting the measurement antenna height and polarization etc. Set RBW=100kHz and VBW= 300KHz to measure the peak field strength , and measure frequency range from 30MHz to 25GHz.

7.8.5 Test Results

Remark: The measurement frequency range is from 30MHz to the 10th harmonic of the fundamental frequency. The lowest, middle and highest channels are tested to verify the spurious emissions and bandege measurement data.

Test data reference attachment.

7.9 ANTENNA APPLICATION

7.9.1 Antenna Requirement

15.203 requirement: For intentional device, according to 15.203: an intentional radiator shall be designed to ensure that no antenna other than that furnished by the responsible party shall be used with the device.

7.9.2 Result

The EUT antenna is FPC Antenna (Gain: 4.66 dBi). It comply with the standard equirement.

8 TEST RESULTS

8.1 DUTY CYCLE

Condition	Mode	Frequency (MHz)	Antenna	Duty Cycle (%)	Correction Factor (dB)	1/T (kHz)
NVNT	BLE 1M	2402	Ant1	64.79	1.88	2.5
NVNT	BLE 1M	2440	Ant1	64.79	1.88	2.56
NVNT	BLE 1M	2480	Ant1	63.99	1.94	2.56

Test Graphs

Duty Cycle NVNT BLE 1M 2402MHz Ant1

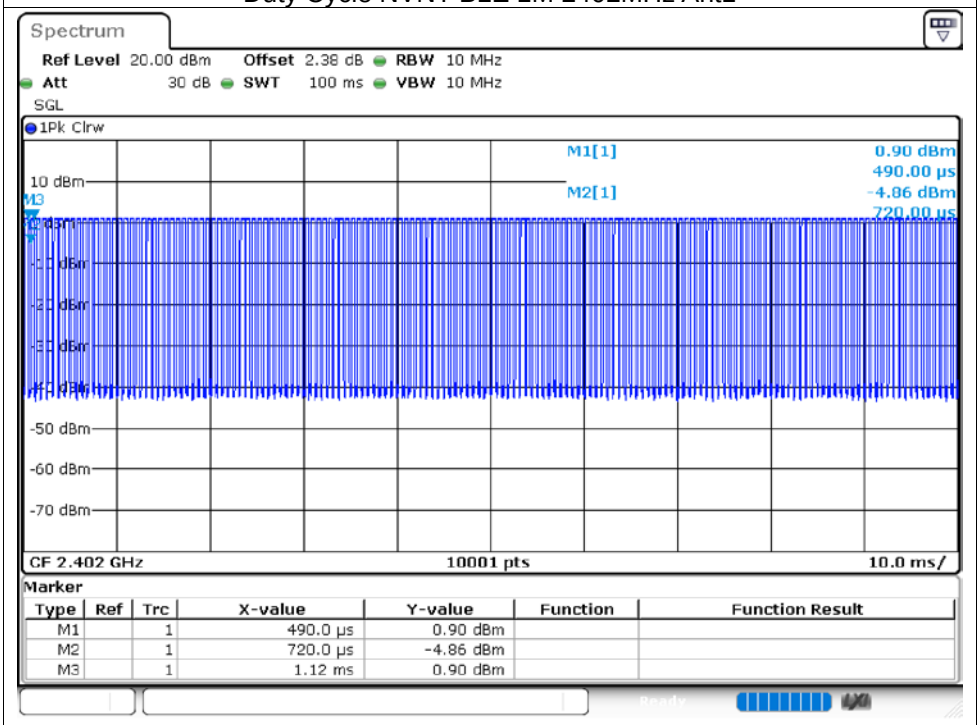

Duty Cycle NVNT BLE 1M 2440MHz Ant1

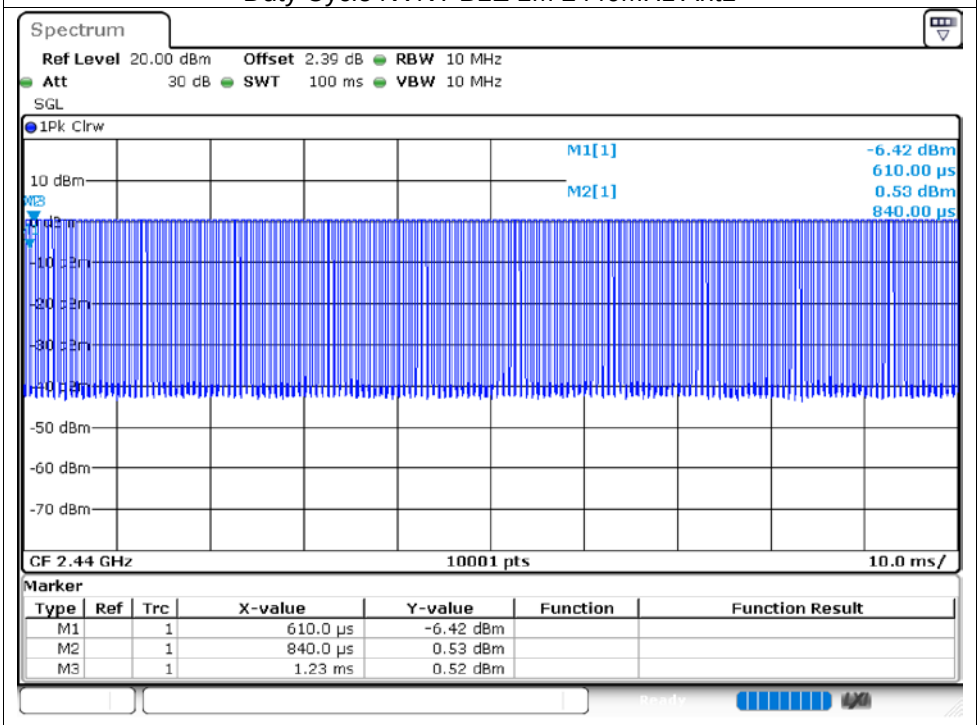

Duty Cycle NVNT BLE 1M 2480MHz Ant1

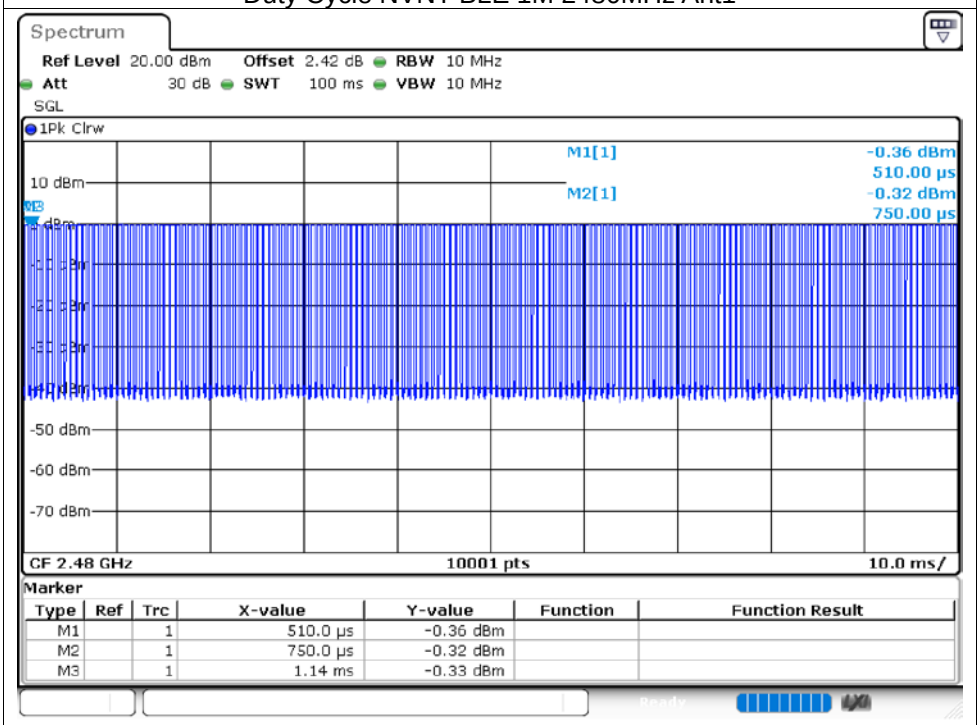

8.2 MAXIMUM CONDUCTED OUTPUT POWER

Condition	Mode	Frequency (MHz)	Antenna	Conducted Power (dBm)	Limit (dBm)	Verdict
NVNT	BLE 1M	2402	Ant1	0.96	30	Pass
NVNT	BLE 1M	2440	Ant1	0.6	30	Pass
NVNT	BLE 1M	2480	Ant1	-0.31	30	Pass

Test Graphs

Power NVNT BLE 1M 2402MHz Ant1

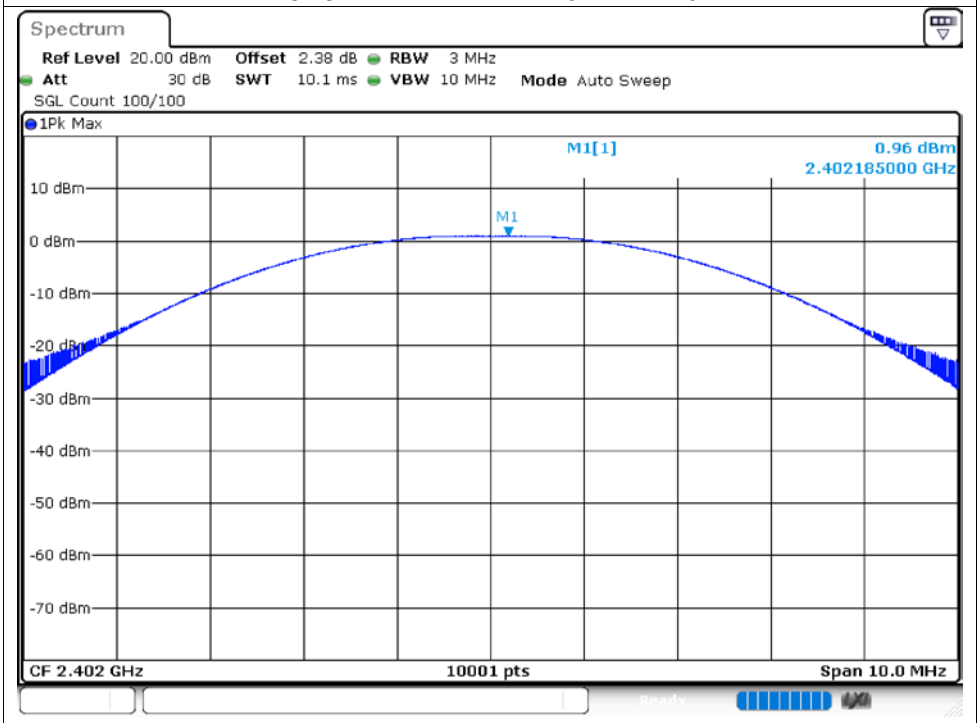

Power NVNT BLE 1M 2440MHz Ant1

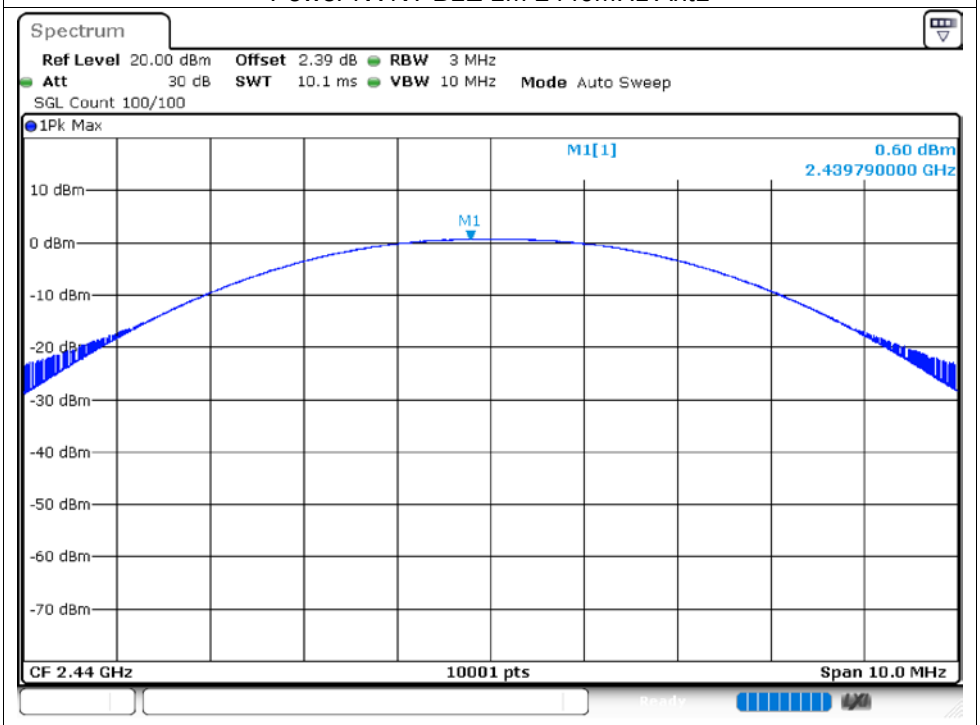

Power NVNT BLE 1M 2480MHz Ant1

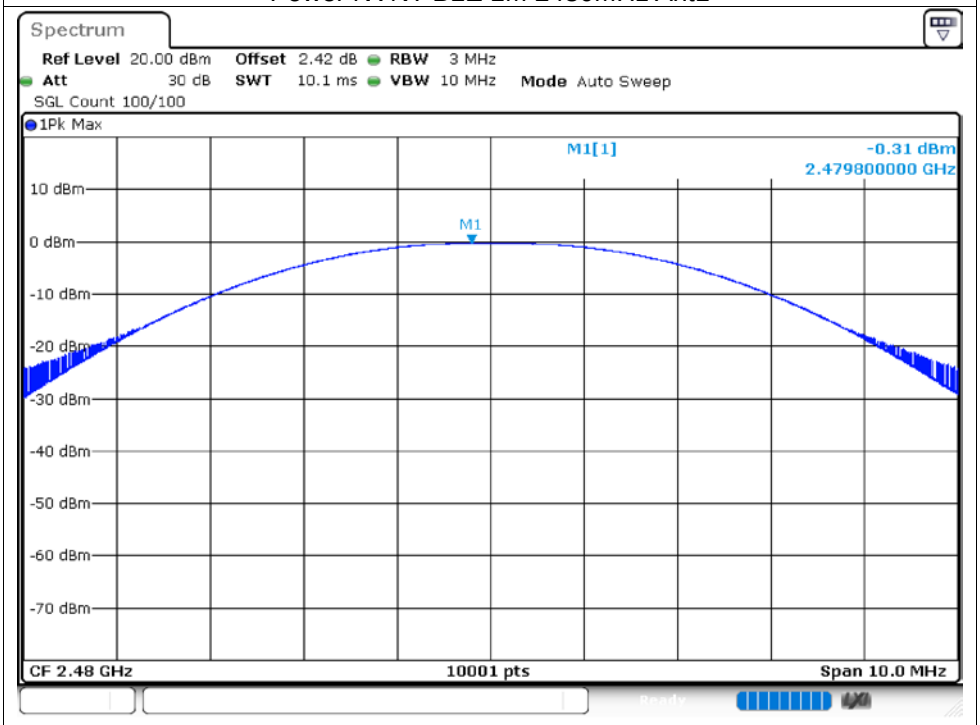

8.3 -6dB BANDWIDTH

Condition	Mode	Frequency (MHz)	Antenna	-6 dB Bandwidth (MHz)	Limit -6 dB Bandwidth (MHz)	Verdict
NVNT	BLE 1M	2402	Ant1	0.688	0.5	Pass
NVNT	BLE 1M	2440	Ant1	0.678	0.5	Pass
NVNT	BLE 1M	2480	Ant1	0.725	0.5	Pass

Test Graphs

-6dB Bandwidth NVNT BLE 1M 2402MHz Ant1

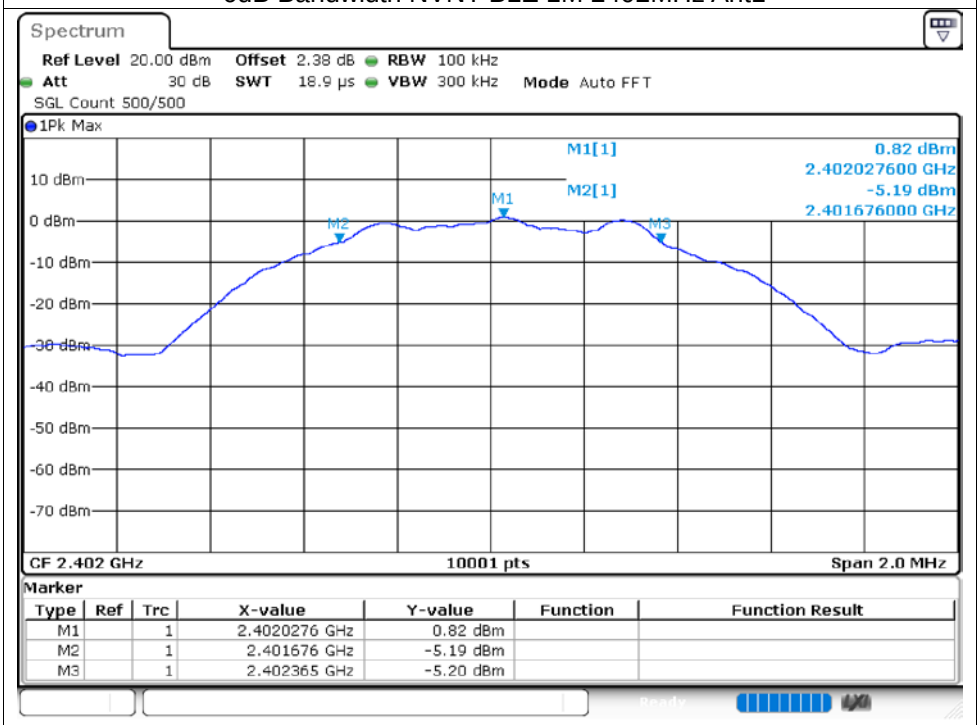

-6dB Bandwidth NVNT BLE 1M 2440MHz Ant1

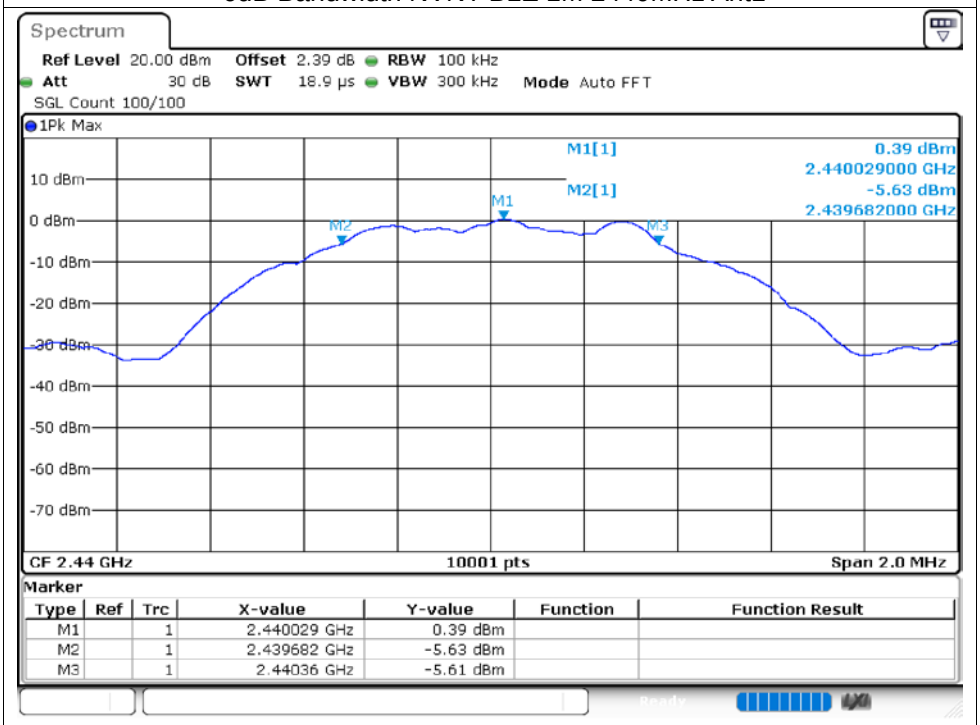

-6dB Bandwidth NVNT BLE 1M 2480MHz Ant1

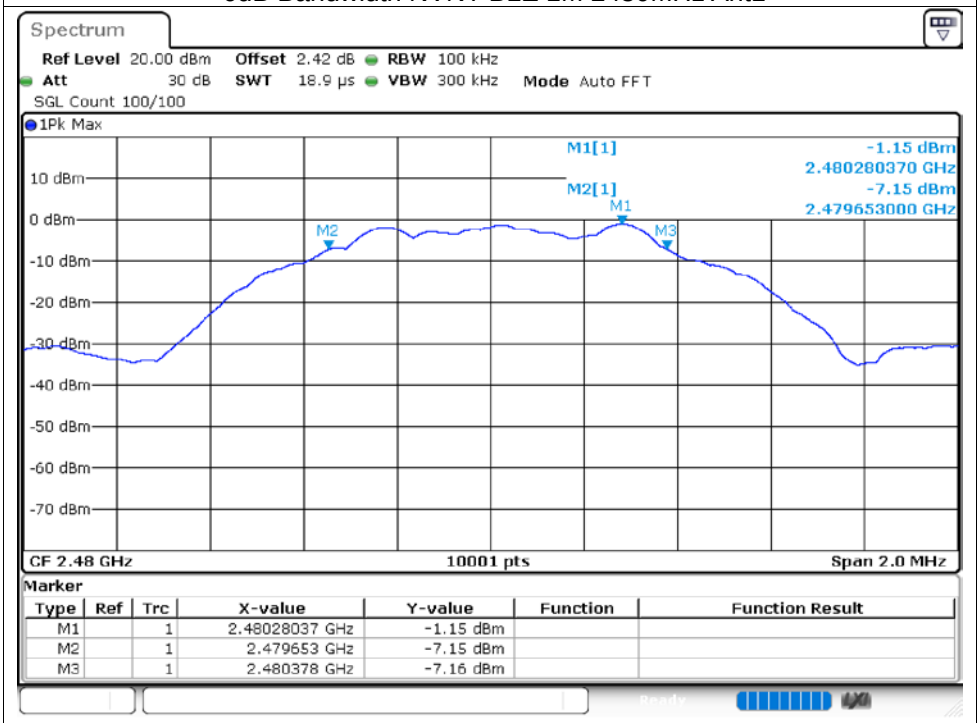

8.4 OCCUPIED CHANNEL BANDWIDTH

Condition	Mode	Frequency (MHz)	Antenna	99% OBW (MHz)
NVNT	BLE 1M	2402	Ant1	1.035
NVNT	BLE 1M	2440	Ant1	1.038
NVNT	BLE 1M	2480	Ant1	1.04

Test Graphs

OBW NVNT BLE 1M 2402MHz Ant1

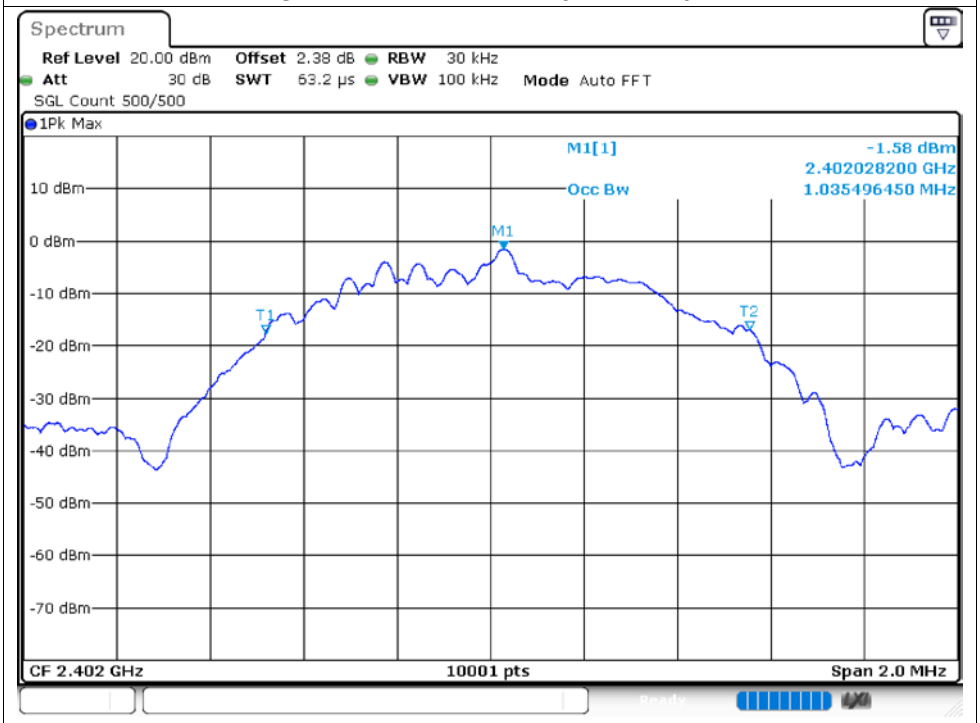

OBW NVNT BLE 1M 2440MHz Ant1

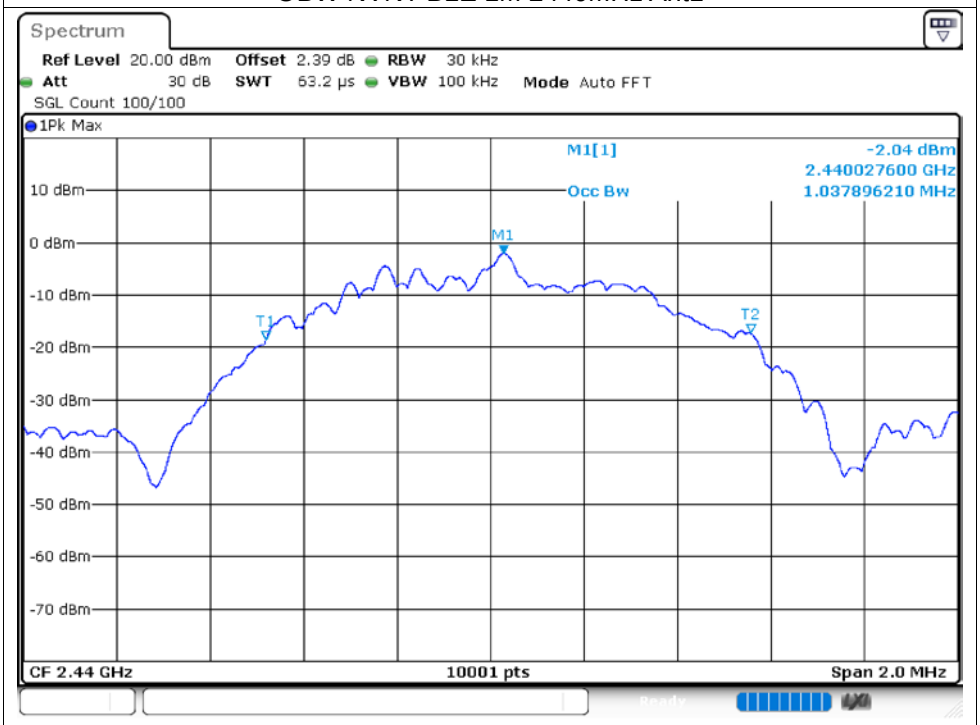

OBW NVNT BLE 1M 2480MHz Ant1

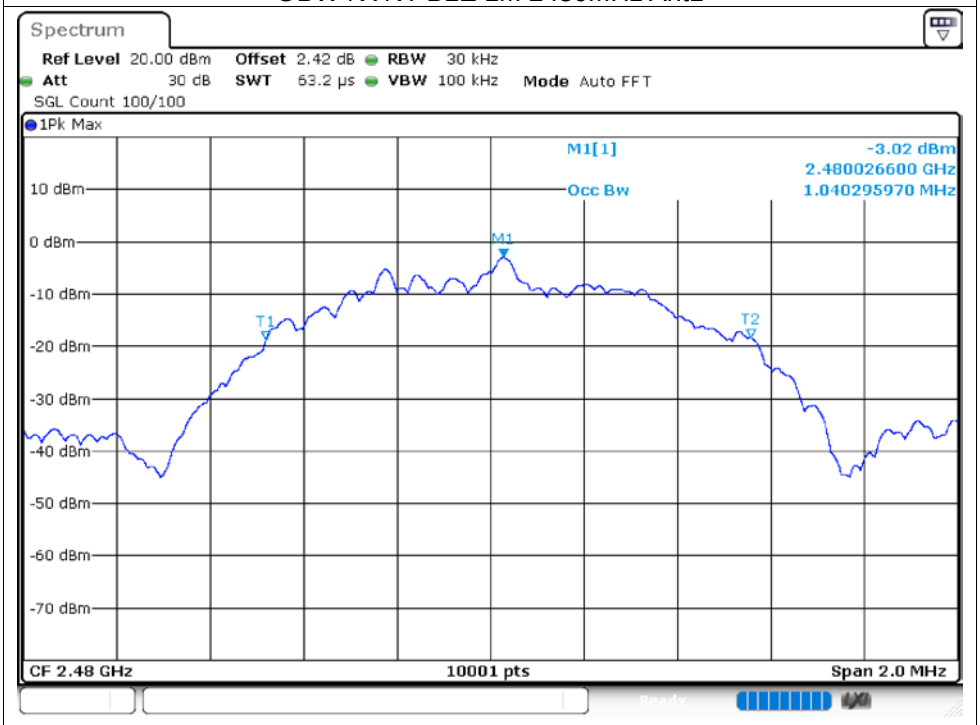

8.5 MAXIMUM POWER SPECTRAL DENSITY LEVEL

Condition	Mode	Frequency (MHz)	Antenna	Conducted PSD (dBm)	Limit (dBm)	Verdict
NVNT	BLE 1M	2402	Ant1	-14.7	8	Pass
NVNT	BLE 1M	2440	Ant1	-15.18	8	Pass
NVNT	BLE 1M	2480	Ant1	-16.1	8	Pass

Test Graphs

PSD NVNT BLE 1M 2402MHz Ant1

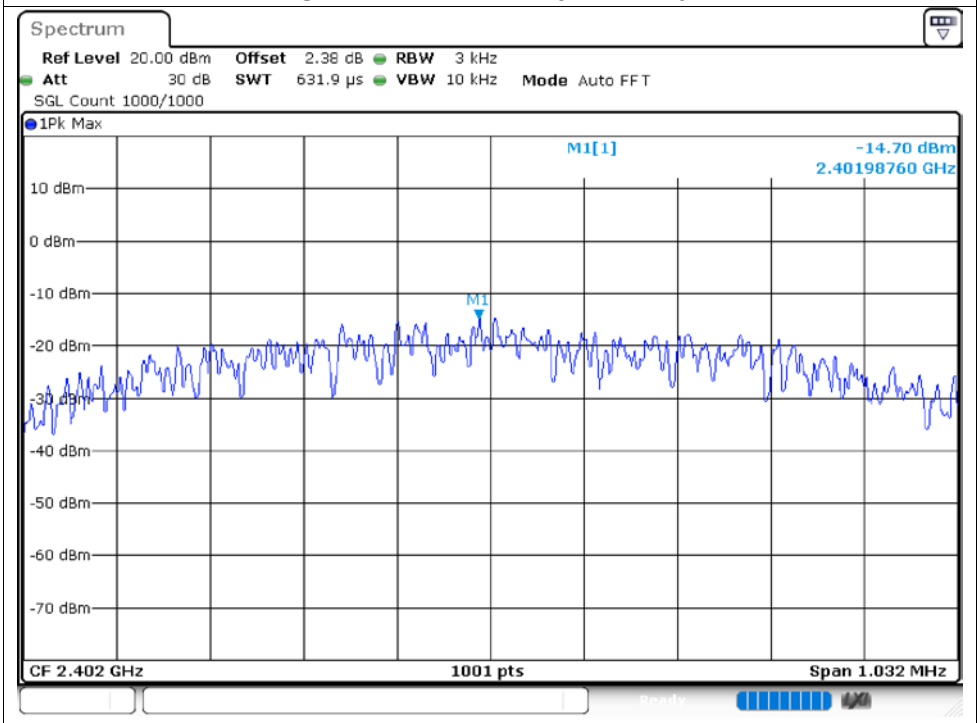

PSD NVNT BLE 1M 2440MHz Ant1

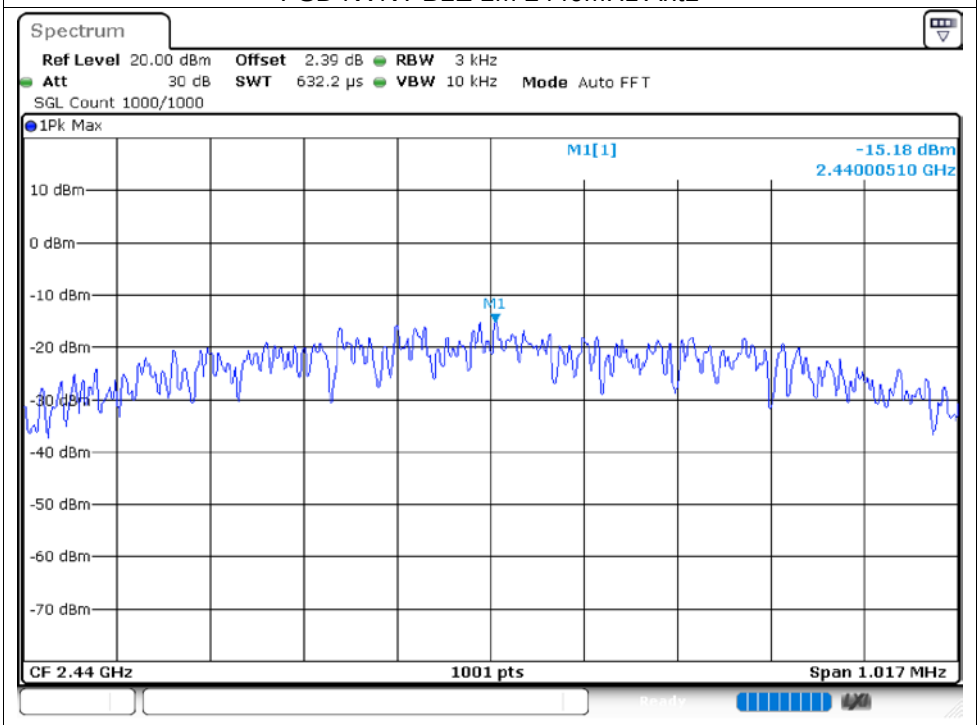

PSD NVNT BLE 1M 2480MHz Ant1

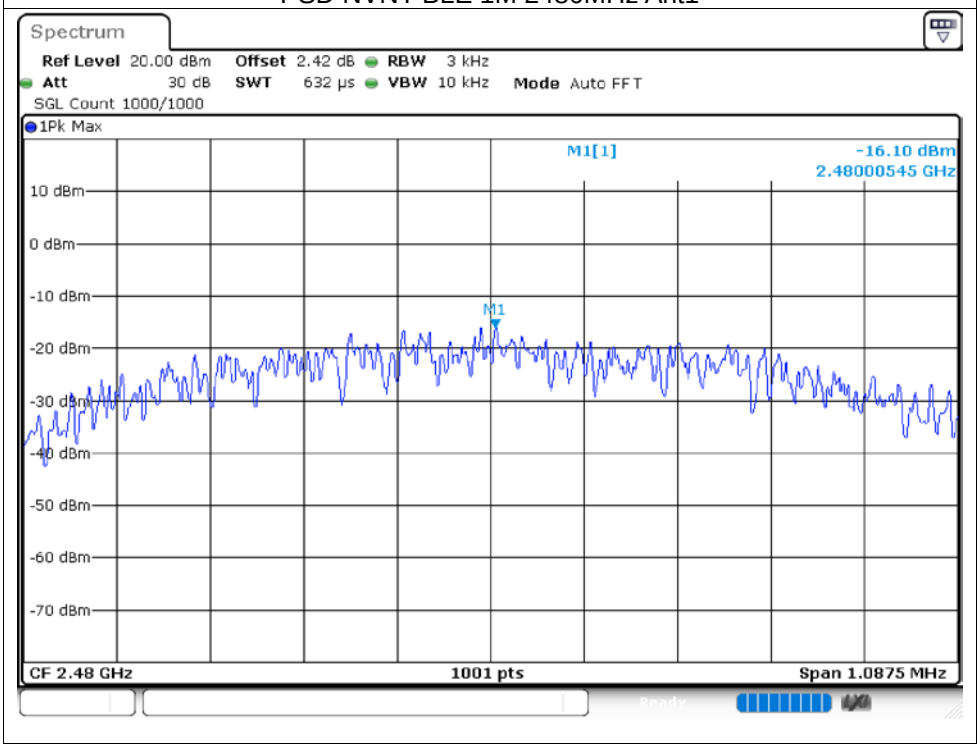

8.6 BAND EDGE

Condition	Mode	Frequency (MHz)	Antenna	Max Value (dBc)	Limit (dBc)	Verdict
NVNT	BLE 1M	2402	Ant1	-54.25	-20	Pass
NVNT	BLE 1M	2480	Ant1	-59.71	-20	Pass

Test Graphs

Band Edge NVNT BLE 1M 2402MHz Ant1 Ref

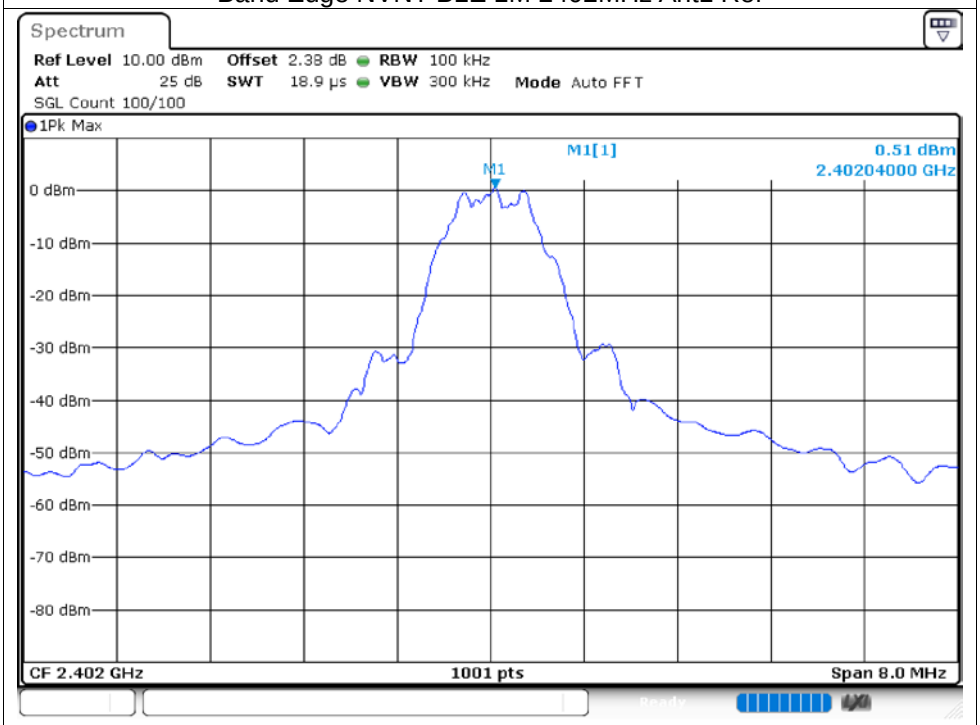

Band Edge NVNT BLE 1M 2402MHz Ant1 Emission

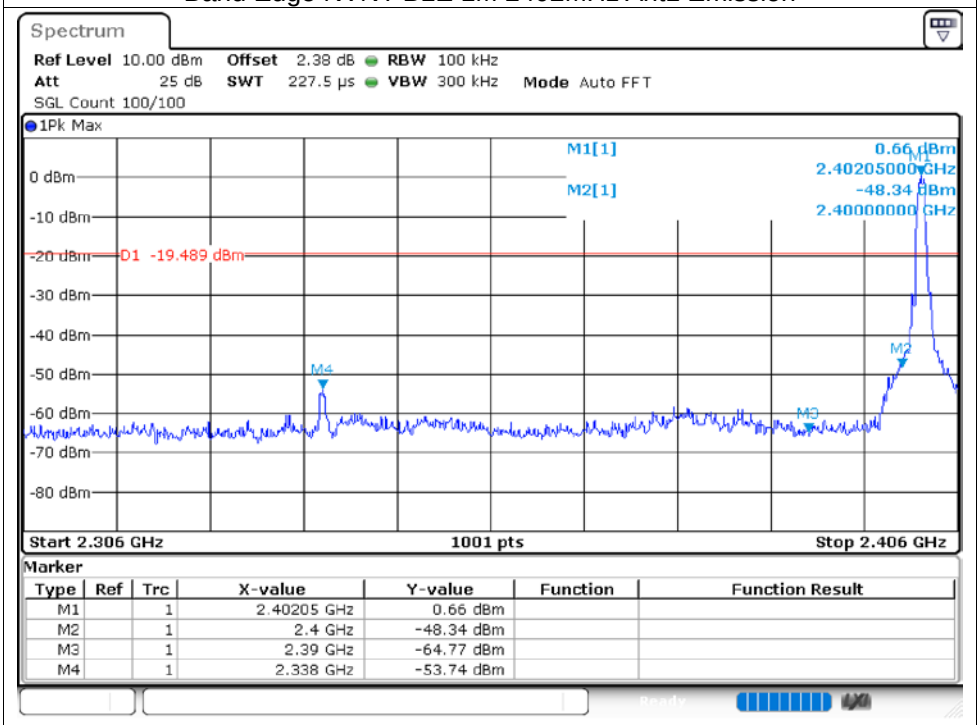

Band Edge NVNT BLE 1M 2480MHz Ant1 Ref

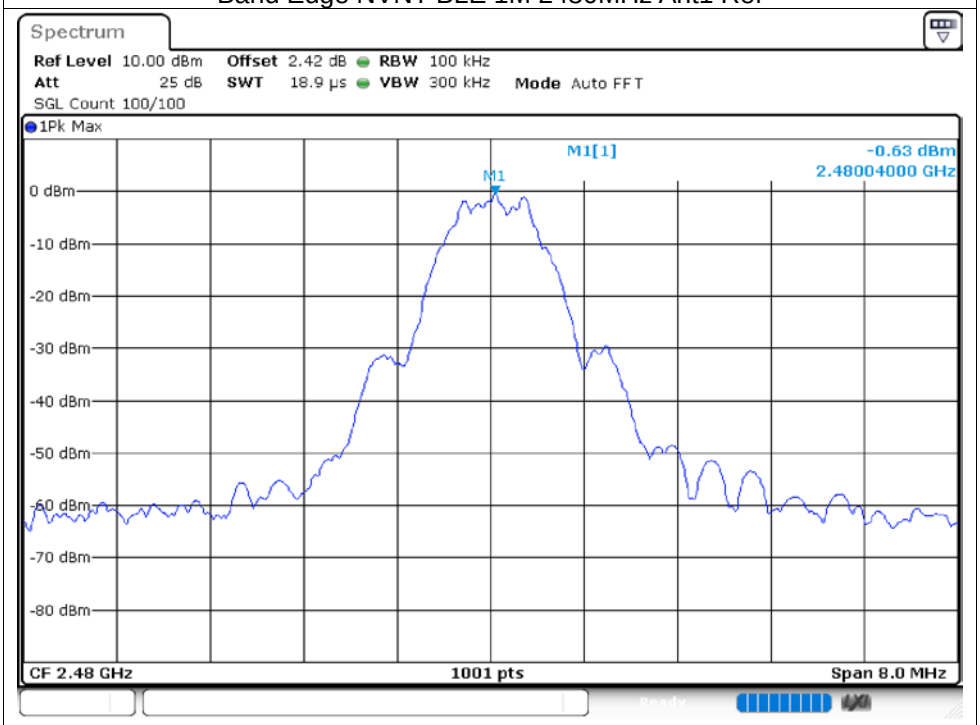

Band Edge NVNT BLE 1M 2480MHz Ant1 Emission

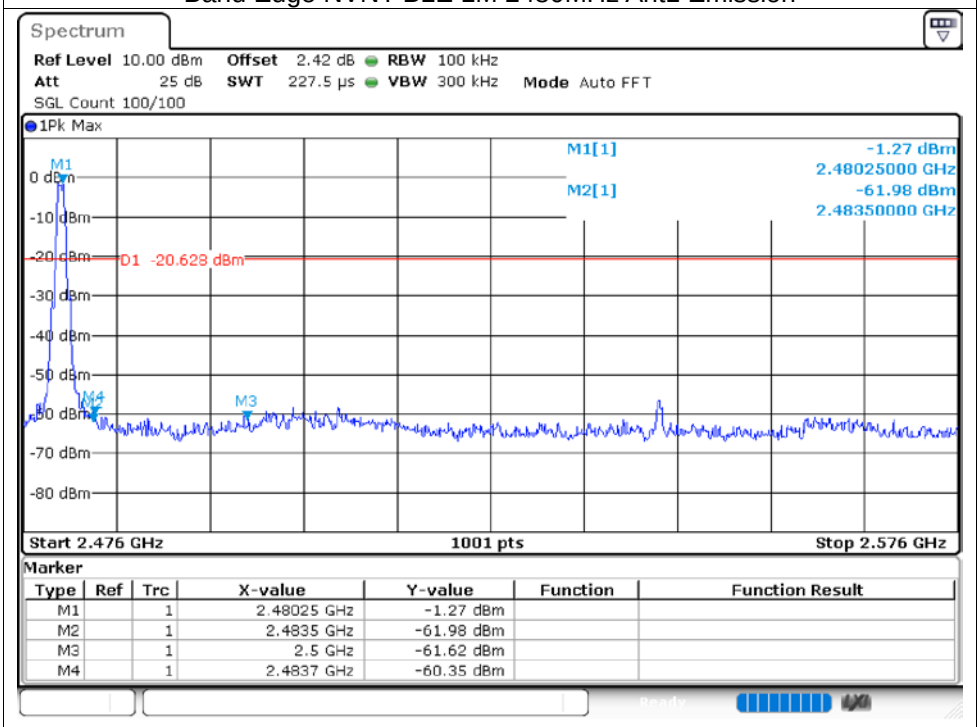

Marker

Type	Ref	Trc	X-value	Y-value	Function	Function Result
M1		1	2.48025 GHz	-1.27 dBm		
M2		1	2.4835 GHz	-61.98 dBm		
M3		1	2.5 GHz	-61.62 dBm		
M4		1	2.4837 GHz	-60.35 dBm		

8.7 CONDUCTED RF SPURIOUS EMISSION

Condition	Mode	Frequency (MHz)	Antenna	Max Value (dBc)	Limit (dBc)	Verdict
NVNT	BLE 1M	2402	Ant1	-46.77	-20	Pass
NVNT	BLE 1M	2440	Ant1	-47.22	-20	Pass
NVNT	BLE 1M	2480	Ant1	-46.93	-20	Pass

Test Graphs

Tx. Spurious NVNT BLE 1M 2402MHz Ant1 Ref

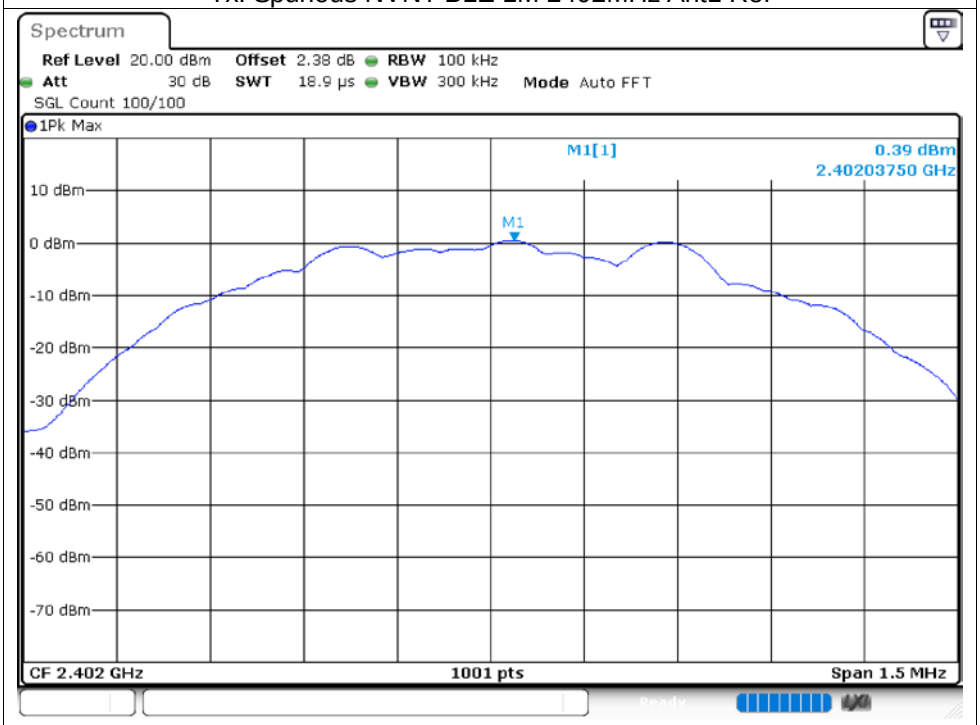

Tx. Spurious NVNT BLE 1M 2402MHz Ant1 Emission

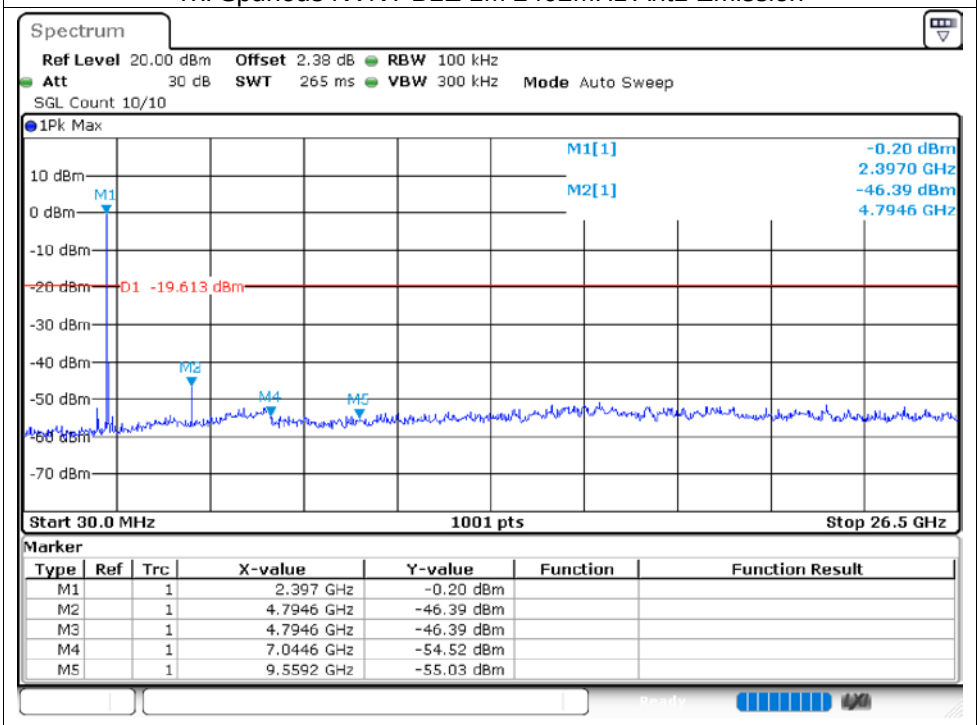

Marker

Type	Ref	Trc	X-value	Y-value	Function	Function Result
M1		1	2.397 GHz	-0.20 dBm		
M2		1	4.7946 GHz	-46.39 dBm		
M3		1	4.7946 GHz	-46.39 dBm		
M4		1	7.0446 GHz	-54.52 dBm		
M5		1	9.5592 GHz	-55.03 dBm		

Tx. Spurious NVNT BLE 1M 2440MHz Ant1 Ref

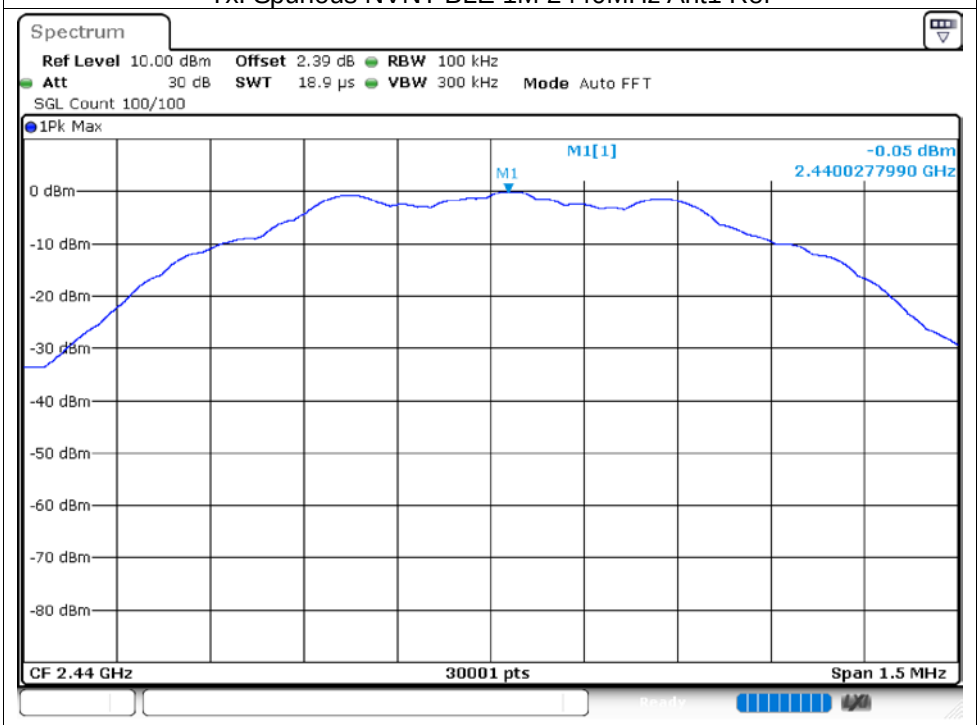

Tx. Spurious NVNT BLE 1M 2440MHz Ant1 Emission

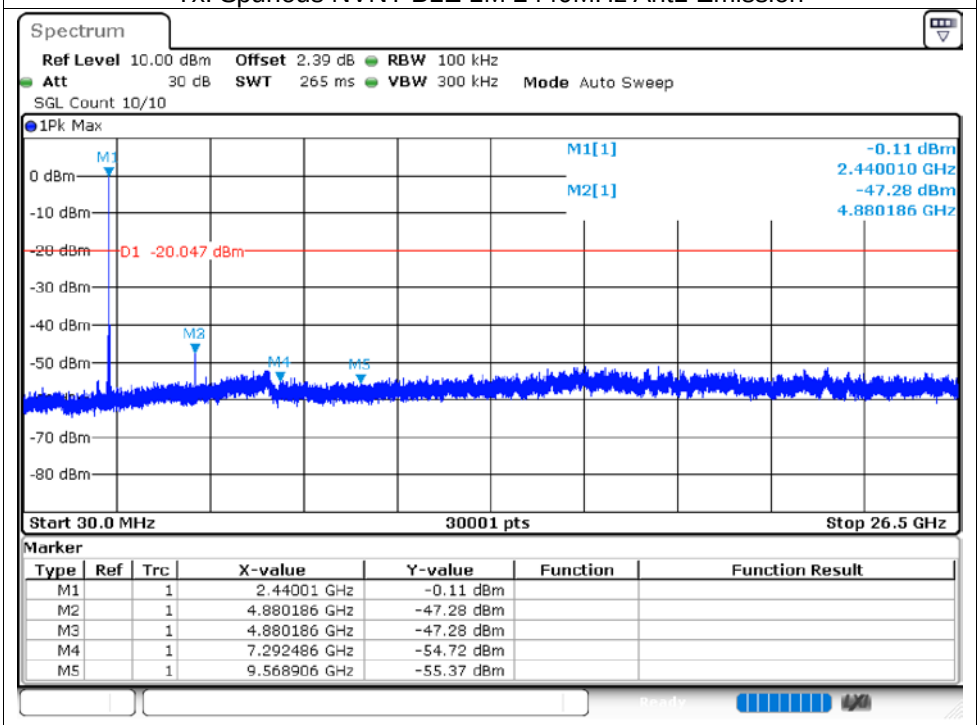

Marker

Type	Ref	Trc	X-value	Y-value	Function	Function Result
M1		1	2.44001 GHz	-0.11 dBm		
M2		1	4.880186 GHz	-47.28 dBm		
M3		1	4.880186 GHz	-47.28 dBm		
M4		1	7.292486 GHz	-54.72 dBm		
M5		1	9.568906 GHz	-55.37 dBm		

Tx. Spurious NVNT BLE 1M 2480MHz Ant1 Ref

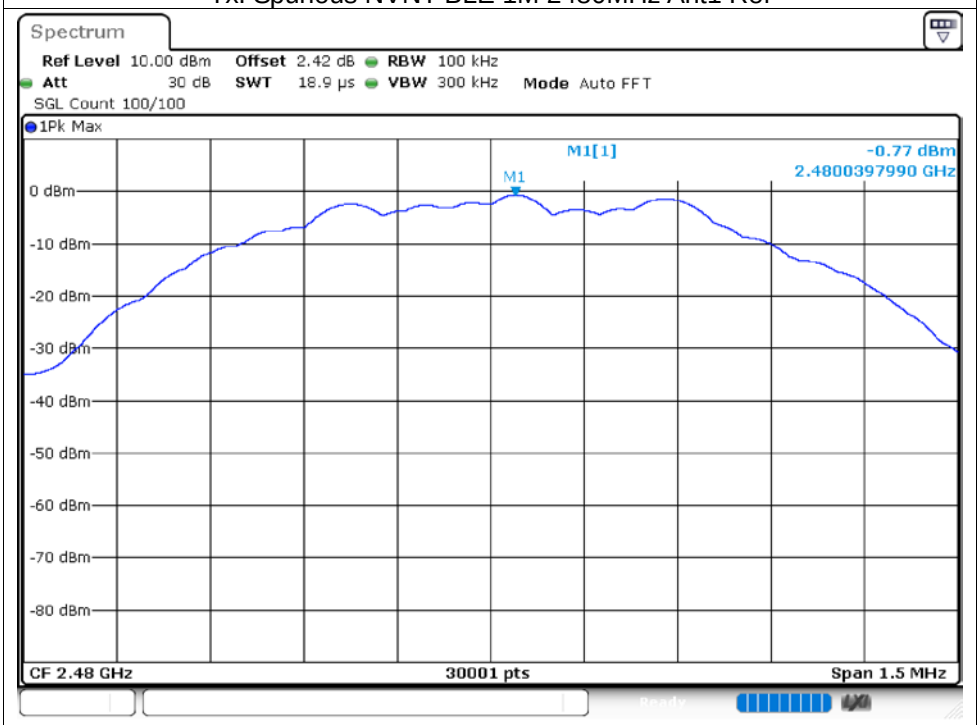

Tx. Spurious NVNT BLE 1M 2480MHz Ant1 Emission

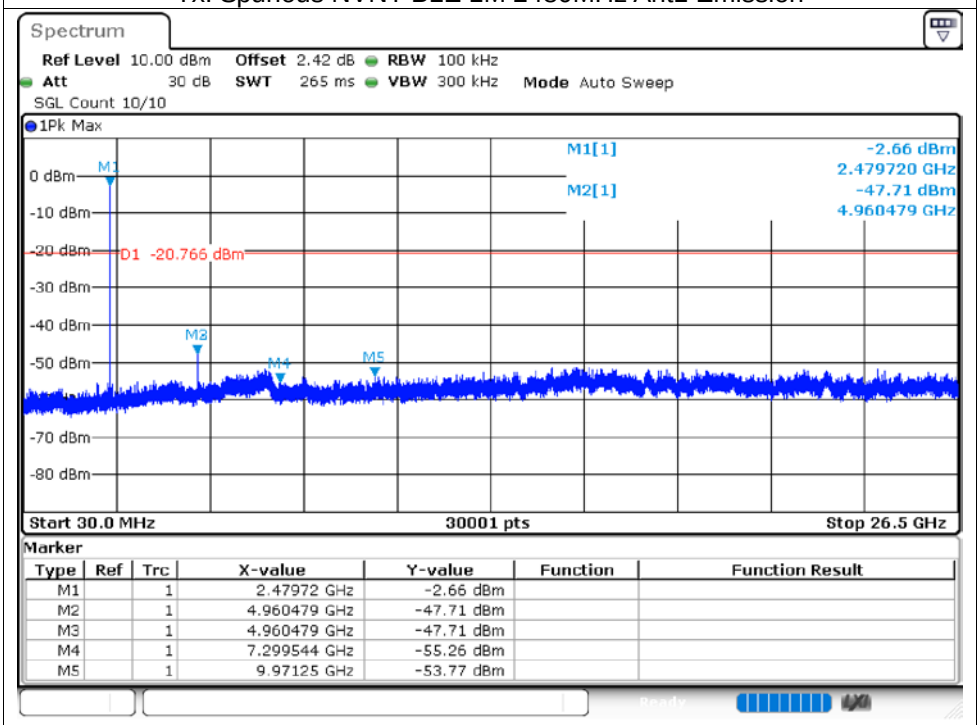

Marker

Type	Ref	Trc	X-value	Y-value	Function	Function Result
M1		1	2.47972 GHz	-2.66 dBm		
M2		1	4.960479 GHz	-47.71 dBm		
M3		1	4.960479 GHz	-47.71 dBm		
M4		1	7.299544 GHz	-55.26 dBm		
M5		1	9.97125 GHz	-53.77 dBm		

END OF REPORT