Z15使用手册 中英文 双面 400*120mm

使用手册

炫彩野营灯音箱

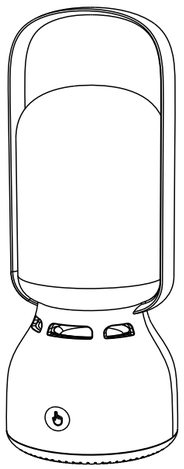

FCC Caution：

This device complies with part 15 of the FCC Rules. Operation is subject to the
following two conditions: (1) This device may not cause harmful interference, and (2)
this device must accept any interference received, including interference that may
cause undesired operation.
Any Changes or modifications not expressly approved by the party responsible for
compliance could void the user's authority to operate the equipment.
Note: This equipment has been tested and found to comply with the limits for a Class
B digital device, pursuant to part 15 of the FCC Rules. These limits are designed to
provide reasonable protection against harmful interference in a residential installation.
This equipment generates uses and can radiate radio frequency energy and, if not
installed and used in accordance with the instructions, may cause harmful interference
to radio communications. However, there is no guarantee that interference will not
occur in a particular installation. If this equipment does cause harmful interference to
radio or television reception, which can be determined by turning the equipment off
and on, the user is encouraged to try to correct the interference by one or more of the
following measures:
-Reorient or relocate the receiving antenna.
-Increase the separation between the equipment and receiver.
-Connect the equipment into an outlet on a circuit different from that to which the
receiver is connected.
-Consult the dealer or an experienced radio/TV technician for help.
The device has been evaluated to meet general RF exposure requirement. The device
can be used in portable exposure condition without restriction.

部件名称

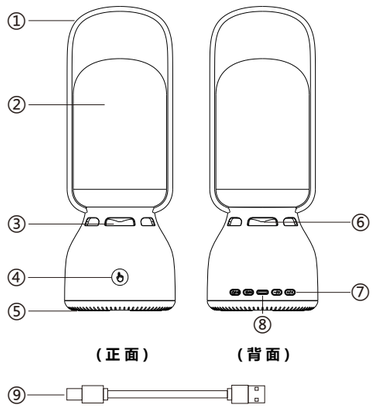

① 提手
② 灯罩
③ 扬声器
④ 夜灯触摸开关键
⑤ 防滑硅胶垫
⑥ 充电指示灯
⑦ 功能按键
⑧ TYPE-C充电口
⑨ TYPE-C充电线

音箱充电

a. 连接TYPE-C充电线到音箱的充电口。
b. 充电器选用5V 1A适配器。
给音箱充电时指示灯亮红灯，充满电红灯变绿灯。
充电时间：不工作情况下需充电约2.5-3小时。
音乐时间：5小时左右(70%音量，关灯状态下)

夜灯使用

单击：开灯10%亮度-50%亮度-100%亮度-关灯，以此循环。

功能键说明

长按：音箱开机/关机
单击：播放/暂停
双击：TWS对机

长按：开启彩灯/关闭彩灯
单击：切换彩灯模式

长按：减音量
单击：上一曲

长按：加音量
单击：下一曲

彩灯模式

音箱开机彩灯颜色默认为黄色光，单击 切换灯光模式，共11种模式。单击 灯光依次为：黄色，绿色，红色，冰蓝色，蓝色，紫色，橙色，七彩呼吸，七彩渐变，七彩流光，七彩音乐律动。

蓝牙连接

长按 ，音箱开机，手机设置里打开手机的蓝牙，找到 Z15 名称点击配对。
*开机后无连接蓝牙情况下5分钟后自动关机。

TWS 对机

两台音箱都开机，断开手机蓝牙状态，双击其中任一个音箱的 ，会听到"咚" 的提示音，过3秒左右两个音箱同时有“咚”的提示音，表示对机成功。
再次双击其中任一个音箱的 ，会听到“咚咚”的提示音，表示对机解绑。

注意事项

1. 禁止使用非标称电压进行充电。
2. 产品内含锂电池，禁止靠近热源。
3. 为保证夜灯电池的有效使用寿命，请保证至少每3个月充一次电。

User Manual

RGB Camping Lantern Speaker

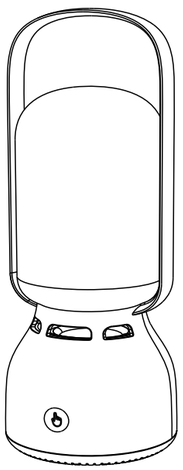

Product Parameters

Product Name: RGB Camping Lantern Speaker
Interface: TYPE-C
Input Voltage: 5V/1A
LED Power: 2.4W (12×0.2W/LED module)
Bluetooth Name: Z15
Speaker Power: 5W
Response Frequency: 70Hz~18KHz
Bluetooth Version: 5.4
Bluetooth Distance: 10M
Battery Capacity: 1800mAH
Product Size: Ø88.5x240mm
Material: ABS+PC
Net Weight: 390g
Standard: GB7000.1 GB7000.204
Patent No. : ZL202430218914.X

Parts Description

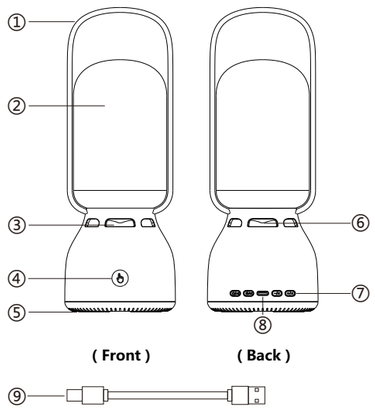

① Handel
② Light cover
③ Speaker
④ Lights touch switch
⑤ Bottom anti-slip silicon
⑥ Charging inductor light
⑦ Operation Key
⑧ TYPE-C charging port
⑨ TYPE-C charging cable

Speaker charging

a. Connect the type-C charging cable to the charging port of the speaker for charging.
b. The charger adopts 5V 1A adapter.
When charging the speaker, the indicator light turns red, and when fully charged, the red light turns green.
Charging time: It takes about 2.5-3 hours to charge without turning on the light.
Music time: about 5 hours (70% volume, light off)

Night light works

Single click turn on , and 10%-50%-100%-turn off for a cycle.

The Key function description

Long press: turn on/off speaker
Single click: play/pause
Double click: TWS function

Long press: turn on /off the RGB lights
Single click: the colorful lights to switch

Long press: voice reduce
Single click: previous song

Long press: Voice add
Single click: Next song

RGB modes

The light color will yellow when speaker power on, click will switch the color mode,total 11 models. Click lights will be yellow, green, red, ice blue, blue, purple, orange, RGB breathing, RGB gradient, RGB flowing light, and RGB rhythm.

Wireless speaker operation

Long press turn on the bluetooth speaker , and searching compare name **Z15** connected.
Notify : The speaker will turn off when 5 mins later not connected the bluetooth model.

TWS function

Two RGB lantern speaker turn on , double click one of speaker will a sound “ tong “ , 3 seconds later two RGB lantern speaker same sound “tong” , it means TWS function working , double click a Lantern speaker again “tong tong “ sounds , Means TWS out of working .

Notify

1. Prohibited to use non-nominal voltage for charging.
2. Battery products ,keep away heat.
3. Please charging ,if not using at 3 Month.