Acknowledgment Letter

SPECIFICATION FOR APPROVAL

CUSTOMER: inzhizhuo Technology Co., L

CUSTOMER P/N:

DESCRIPTION : DATE:2024/5/30

SPECIFICATION : **Watch coil 8.1UH 8MM long** **REV.NO.:A0**

Hongri Shengwei Technology acknowledges, signs and seals

department	confirm	to examine	ratify	Stamped with the company seal
quality	Dong Wanhong	Lv Hui	Wei Hanman	
engineering	He Weihua	Wei Lihong	Wei Lihong	

notes:

Jin Zhizhuo Technology acknowledges, signs, and stamps

department	Confirmation/Date	Review/Date	Approved/date	Stamped with the company seal
development engineering				
procure				
quality				

notes:

Shenzhen Hongrishengwei Technology Co., Ltd

or, Building 1, No. 48 Guanlan Huanguan Middle Road, Longhu

TEL: 15112254520/13682412162

SPECIFICATION FOR APPROVAL

1.MECHANICAL DIMENSION (UNIT:mm)

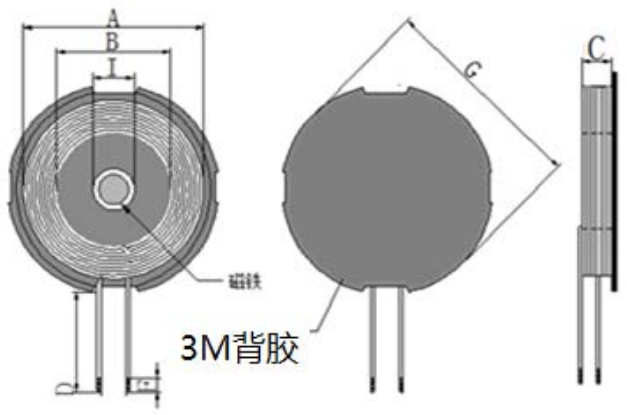

2. SCHEMATICS:

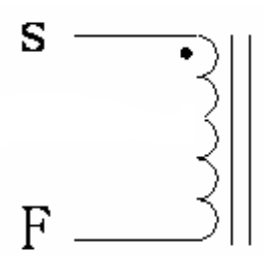

1. Magnet: 8 * 2.45 3200 Gauss

A	B	C	D	F	G	I			
20±2	14±1	2.8±0.5	8±2	3±1.5	25REF	7.8±0.5			

3.WINDING:

STEP	START-FINISH	WIRE TYPE	TURNS	TAPE	REMARK
N1	S-F	0.08*24mm 2UEW	14TS (Ref)		

4. ELECTRICAL SPECIFICATION:

ITEM	L	DCR	IDC		HI-POT	
TEST CON	S-F	S-F	S-F			
	100KHz,0.25V	AT 25℃	AT 25℃			
SPEC	8.1uH±5%	130mΩ(Max)	2.5A			

5.BILF OF MATERIAL:

NO.	ITEM	MATERIAL SPECIFICATION	MANUFACTURER	SGS NO.
1	CORE	UG25软磁	NANJINGJINNINGCO,LTD	
2	magnet	8 * 2.45 3200 Gauss	NANJINGJINNINGCO,LTD	
3	Copper wire	0.08mm*24 2UEW	TAIYI CO.,LTD	
4	Adhesive backing	18 double-sided adhesive backing	HONGBAOJEICO,LTD	
5	Solder Bar	Solder Bar	QIANDAO CO.,LTD	
6	glue	9999	CUDAK CO.,LTD	

Hongrishengwei Technology Co., Ltd	PART NO	
	TITLE	Watch coil 8.1UH 8MM long

DRAWN BY	CHECKED BY	APPROVED BY
XIECHAO	HEWEIHUA	WEILIHONG