TEST REPORT

Product Name:	K5EM Access control
FCC ID:	2BK4E-K5EM
Trademark:	N/A
Model Number:	K5EM, S601EM, RF004, S03EM, S100EM, K9
Prepared For:	Shenzhen Guanghuifeng Technology Co., LTD
Address:	Room 107, Building A, Chuangyeyihao Building, No. 43, Yanshan Road, Yanshan Community, Merchants Street, Nanshan District, Shenzhen
Manufacturer:	Shenzhen Guanghuifeng Technology Co., LTD
Address:	Room 107, Building A, Chuangyeyihao Building, No. 43, Yanshan Road, Yanshan Community, Merchants Street, Nanshan District, Shenzhen
Prepared By:	Shenzhen CTB Testing Technology Co., Ltd.
Address:	1&2/F., Building A, No.26, Xinhe Road, Xinqiao, Xinqiao Street, Bao'an District, Shenzhen, Guangdong, China
Sample Received Date:	Aug. 27, 2024
Sample tested Date:	Aug. 27, 2024 to Sep. 12, 2024
Issue Date:	Sep. 12, 2024
Report No.:	CTB240912004RFX
Test Standards	FCC Part 15 C
Test Results	PASS
Remark:	This is125kHz test report.

Compiled by:	Reviewed by:	Approved by:
Zhou Kui	Arron Liu	Bin Mei
Zhou Kui	Arron Liu	Bin Mei / Director

Note: If there is any objection to the inspection results in this report, please submit a written report to the company within 15 days from the date of receiving the report. The test report is effective only with both signature and specialized stamp. This result(s) shown in this report refer only to the sample(s) tested. Without written approval of Shenzhen CTB Testing Technology Co., Ltd. this report can't be reproduced except in full. The tested sample(s) and the sample information are provided by the client. "*" indicates the testing items were fulfilled by subcontracted lab. "#" indicates the items are not in CNAS accreditation scope.

TABLE OF CONTENTS

1. GENERAL INFORMATION 3
1.1. Report information 3
1.2. Measurement Uncertainty 3
1.3. Test Facility 3
1.4. Test Uncertainty 4
2. PRODUCT DESCRIPTION 5
2.1. EUT Description 5
2.2. Block Diagram of EUT Configuration 5
2.3. Test Conditions 5
2.4. DescriptionOfSupport Units (Conducted Mode) 6
3. TEST RESULTS SUMMARY 7
4. TEST EQUIPMENT USED 8
4.1. MEASUREMENT INSTRUMENTS LIST 8
5. CONDUCTED EMISSION TEST 11
5.1. Block Diagram of Test Setup 11
5.2. Test Standard 11
5.3. Conducted Emission Limit 11
5.4. EUT Configuration on Test 11
5.5. Operating Condition of EUT 11
5.6. Test Procedure 12
5.7. Test Result 12
6. RADIATED EMISSION MEASUREMENT 13
6.1. Block Diagram of Test Setup 13
6.2. Test Standard 14
6.3. EMI Test Receiver Setup 14
6.4. Test Procedure 14
6.5. Test Result 14
7. OCCUPIED BANDWIDTH 18
7.1. Block Diagram of Test Setup 18
7.2. Rules and specifications 18
7.3. Test Procedure 18
7.4. Test Result 18
8. EUT TEST PHOTOS 20

1. GENERAL INFORMATION

1.1. Report information

1.1.1. This report is not a certificate of quality; it only applies to the sample of the specific product/equipment given at the time of its testing. The results are not used to indicate or imply that they are application to the similar items. In addition, such results must not be used to indicate or imply that CTB approves recommends or endorses the manufacture, supplier or use of such product/equipment, or that CTB in any way guarantees the later performance of the product/equipment.

1.1.2. The sample/s mentioned in this report is/are supplied by Applicant, CTB therefore assumes no responsibility for the accuracy of information on the brand name, model number, origin of manufacture or any information supplied.

1.1.3. Additional copies of the report are available to the Applicant at an additional fee. No third part can obtain a copy of this report through CTB, unless the applicant has authorized CTB in writing to do so.

1.2. Measurement Uncertainty

Available upon request.

1.3. Test Facility

Site Description

Name of Firm	:	Shenzhen CTB Testing Technology Co., Ltd.
Site Location	:	1&2/F., Building A, No.26, Xinhe Road, Xinqiao, Xinqiao Street, Bao'an District, Shenzhen, Guangdong, China

1.4. Test Uncertainty

Item	Uncertainty
Occupancy bandwidth	54.3kHz
Conducted output power Above 1G	0.9dB
Conducted output power below 1G	0.9dB
Power Spectral Density , Conduction	0.9dB
Conduction spurious emissions	2.0dB
Out of band emission	2.0dB
3m camber Radiated spurious emission(9KHz-30MHz)	3m camber Radiated spurious emission(9KHz-30MHz)
3m camber Radiated spurious emission(30MHz-1GHz)	3m camber Radiated spurious emission(30MHz-1GHz)
3m chamber Radiated spurious emission(1GHz-18GHz)	3m chamber Radiated spurious emission(1GHz-18GHz)
3m chamber Radiated spurious emission(18GHz-40GHz)	3m chamber Radiated spurious emission(18GHz-40GHz)
humidity uncertainty	5.5%
Temperature uncertainty	0.63℃
frequency	1×10-7
Conducted Emission (150KHz-30MHz)	3.2 dB
Radiated Emission(30MHz ~ 1000MHz)	4.8 dB
Radiated Emission(1GHz ~6GHz)	4.9 dB

2. PRODUCT DESCRIPTION

2.1. EUT Description

Description	:	K5EM Access control
Model Number	:	K5EM
Serial Model	:	S601EM, RF004, S03EM, S100EM, K9
Model Difference	:	All the model are the same circuit and RF module, only the model names are different. Test sample model: K5EM
Power Supply		DC 12V
Work Frequency	:	110-205KHz

2.2. Block Diagram of EUT Configuration

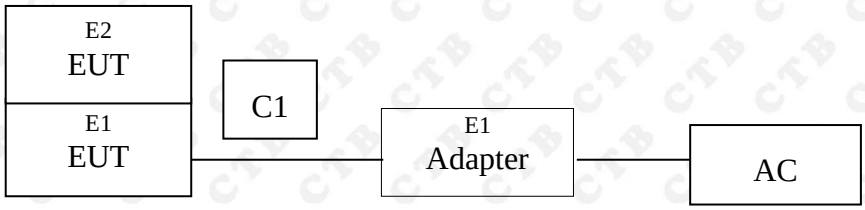

2.3. Test Conditions

Temperature: 23~25℃

Relative Humidity: 50~63 %

2.4. DescriptionOfSupport Units (Conducted Mode)

The EUT has been tested as an independent unit together with other necessary accessories or support units. The following support units or accessories were used to form a representative test configuration during the tests.

Item	Equipment	Mfr/Brand	Model/Type No.	Series No.	Note
E1	DC power	LONGWEI	TPR-12002D	N/A	AE

Item	Shielded Type	Ferrite Core	Length	Note

Note:

(1) The support equipment was authorized by Declaration of Confirmation.
(2) For detachable type I/O cable should be specified the length in cm in『Length』column.
(3) “YES” is means “shielded” “with core”; “NO” is means “unshielded” “without core”.

3. TEST RESULTS SUMMARY

Table 1 Test Results Summary

Section	Test Items	Test Results
15.207	Conducted disturbance	Pass
15.209(a)(f)	Radiated disturbance	Pass
15.215	20 d B Bandwidth	Pass

Remark: “N/A” means “Not applicable.”

4. TEST EQUIPMENT USED

4.1. MEASUREMENT INSTRUMENTS LIST

No.	Equipment	Manufacturer	Type No.	Serial No.	Firmware Version	Calibrated until
1	Spectrum Analyzer	Agilent	N9020A	MY52090073	A.14.16	2025/6/28
2	Power Sensor	Agilent	U2021XA	MY56120032	/	2025/6/28
3	Power Sensor	Agilent	U2021XA	MY56120034	/	2025/6/28
4	Communication test set	R&S	CMW500	108058	V3.5.80	2025/6/28
5	Spectrum Analyzer	KEYSIGHT	N9020A	MY51289897	A.14.16	2025/6/28
6	Signal Generator	Agilent	N5181A	MY50140365	A.01.60	2025/6/28
7	Vector signal generator	Agilent	N5182A	MY47420195	A.01.87	2025/6/28
8	Communication test set	Agilent	E5515C	MY50102567	B.19.07 (E1962B)	2025/6/28
9	2.4 GHz Filter	Shenxiang	MSF2400-2483.5MS-1154	20181015001	/	2025/6/30
10	5 GHz Filter	Shenxiang	MSF5150-5850MS-1155	20181015001	/	2025/6/30
11	Filter	Xingbo	XBLBQ-DZA120	190821-1-1	/	2025/6/30
12	BT&WI-FI Automatic test software	Micowave	MTS8310	Ver. 2.0.0.0	/	/
13	Rohde & Schwarz SFU Broadcast Test System	R&S	SFU	101017	/	2025/6/28
14	Temperature humidity chamber	Hongjing	TH-80CH	DG-15174	/	2025/6/28
15	234G Automatic test software	Micowave	MTS8200	Ver. 2.0.0.0	/	/
16	966 chamber	C.R.T.	966	/	/	2027/6/21
17	Receiver	R&S	ESPI	100362	RF_ATTEN_7 (104489/003)	2025/6/28
18	Amplifier	HP	8447E	2945A02747	/	2025/6/28
19	Amplifier	Agilent	8449B	3008A01838	/	2025/6/28
20	TRILOG Broadband Antenna	Schwarzbeck	VULB 9168	00869	/	2025/6/28
21	Double Ridged Broadband Horn Antenna	Schwarzbeck	BBHA9120D	01911	/	2025/6/28

22	EMI test software	Fala	EZ-EMC	FA-03A2 RE	/	/
23	Loop Antenna	Schwarzbeck	FMZB 1519B	1519B-224	/	2025/6/28
24	loop antenna	ZHINAN	ZN30900A	GTS534	/	/
25	40G Horn antenna	A/H/System	SAS-574	588	/	2025/6/28
26	Amplifier	AEROFLEX	Aeroflex	097	/	2025/6/28
27	Power Metter	KEYSIGHT	N1912AP	N/A	A.05.00	2025/6/28

Continuous disturbance						
No.	Equipment	Manufacturer	Model No.	Serial No.	Firmware version	Calibrated until
1	843 Shield Room	C/ R/ T	843	/	/	2027/6/21
2	AMN	ROHDE&SCHWARZ	ESH3-Z5	831551852	/	2025/6/30
3	Pulse limiter	ROHDE&SCHWARZ	ESH3Z2	357881052	/	2025/6/28
4	EMI TEST RECEIVER	ROHDE&SCHWARZ	ESCI	100428	V4.42.SP3	2025/6/30
5	Coaxial cable	ZDECL	Z302S	18091904	/	2025/6/30
6	ISN	Schwarzbeck	NTFM8158	183	/	2025/6/30
7	Voltage sensor	Schwarzbeck	TK 9420	01189	/	2024/11/16
8	EZ-EMC	Frad	EMC-con3A1.1	/	/	/
9	Current Probe	FCC	F-52B	199453	/	2025/5/27
10	Communication test set	R&S	CMW500	108058	B.19.07 (E1962B)	2025/6/28
11	Communication test set	Agilent	E5515C	MY50102567	V3.5.80	2025/6/28

Radiated emission(No.1 Chamber)						
No.	Equipment	Manufacturer	Model No.	Serial No.	Firmware version	Calibrated until
1	966 Chamber	C/ R/ T	966	/	/	2027/6/21
2	Double Ridged Broadband Horn Antenna	Schwarzbeck	BBHA 9120 D	01911	/	2025/7/06
3	TRILOG Broadband Antenna	Schwarzbeck	VULB 9168	00869	/	2025/6/29
4	Amplifier	Agilent	8449B	3008A01838	/	2025/6/30
5	Amplifier	HP	8447E	2945A02747	/	2025/6/28
6	loop antenna	Schwarzbeck	FMZB 1519B	1519B-224	/	2025/6/29
7	EMI TEST RECEIVER	ROHDE&SCHWARZ	ESPI	100362	RF_ATTEN_7 (104489/003)	2025/6/28
8	Spectrum Analyzer	KEYSIGHT	N9020A	MY51289897	A.14.16	2025/6/28
9	Coaxial cable	ETS	RFC-SNS-100-NMS-80	/	/	2025/6/28

10	Coaxial cable	ETS	RFC-SN-100-NMS-20	/	/	2025/6/28
11	Coaxial cable	ETS	RFC-SNS-100-SMS-20	/	/	2025/6/28
12	Coaxial cable	ETS	RFC-NNS-100-NMS-300	/	/	2025/6/28
13	EMI test software	Frad	EZ-EMC	Ver/ FA-03A2 RE	/	/
14	Communication test set	R&S	CMW500	108058	B.19.07 (E1962B)	2025/6/28
15	Communication test set	Agilent	E5515C	MY50102567	V3.5.80	2025/6/28

Radiated emission(No.2 Chamber)						
No.	Equipment	Manufacturer	Model No.	Serial No.	Firmware version	Calibrated until
1	966 Chamber	C/ R/ T	966	/	/	2026/11/14
2	Double Ridged Broadband Horn Antenna	Schwarzbeck	BBHA 9120 D	01911	/	2026/7/07
3	Broadband Antenna	Schwarzbeck	VULB 9168	1471	/	2025/7/06
4	Amplifier	Agilent	8449B	3008A01838	/	2025/6/30
5	Preamplifier	Schwarzbeck	BBV 9743 B	00500	/	2025/5/23
6	EMI TEST RECEIVER	R&S	ESCI7	100861	/	2024/11/27
7	Spectrum Analyzer	KEYSIGHT	N9020A	MY51289897	A.14.16	2025/6/28
8	EMI test software	Farad	EZ-EMC	/	Ver. FARAD-3A1+	/
9	Coaxial cable	Rosenberg	8m	/	/	2024/11/27
10	Coaxial cable	Times	2m	/	/	2024/11/27
11	Coaxial cable	Times	2m	/	/	2024/11/27
12	Coaxial cable	Times	1m	/	/	2024/11/27
13	loop antenna	Schwarzbeck	FMZB 1519B	1519B-224	/	2025/6/29
14	Communication test set	R&S	CMW500	108058	B.19.07 (E1962B)	2025/6/28
15	Communication test set	Agilent	E5515C	MY50102567	V3.5.80	2025/6/28

5. CONDUCTED EMISSION TEST

5.1. Block Diagram of Test Setup

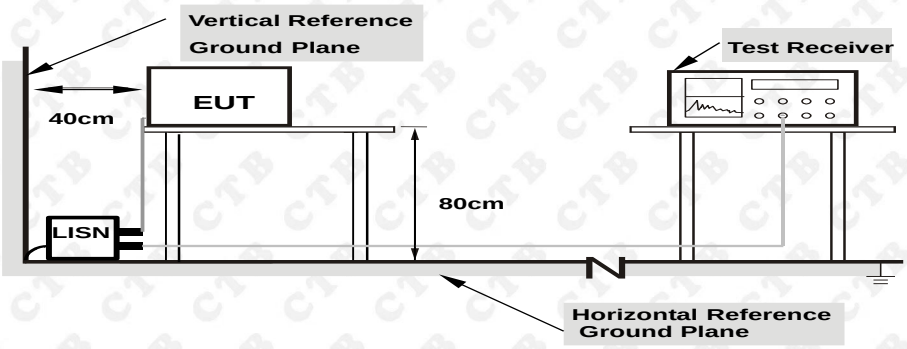

Note: 1.Support units were connected to second LISN.
2.Both of LISNs (AMN) are 80 cm from EUT and at least 80 from other units and other metal planes

The setup of EUT is according with per ANSI C63.10-2013 measurement procedure.
The specification used was with the FCC Part 15.207 limits.

5.2. Test Standard

FCC§15.207

5.3. Conducted Emission Limit

Frequency MHz	Limits dB(μV)	
	Quasi-peak Level	Average Level
0.15 ~ 0.50	66 ~ 56*	56 ~ 46*
0.50 ~ 5.00	56	46
5.00 ~ 30.00	60	50

Notes: 1. *Decreasing linearly with logarithm of frequency.

5.4. EUT Configuration on Test

The following equipments are installed on conducted emission test to meet FCC Part 15.207 requirement and operating in a manner, which tends to maximize its emission characteristics in a normal application.

5.5. Operating Condition of EUT

5.5.1.Setup the EUT and simulators as shown in Section 5.1.

5.5.2.Turn on the power of all equipments.

5.5.3.Let the EUT work in test modes (EUTWorking) and test it.

5.6. Test Procedure

The EUT is put on a table of non-conducting material that is 80cm high. The vertical conducting wall of shielding is located 40cm to the rear of the EUT. The power line of the EUT is connected to the AC mains through a Artificial Mains Network (A.M.N.). A EMI test receiver (R&S Test Receiver ESHS30) is used to test the emissions form both sides of AC line. The bandwidth of EMI test receiver is set at 9kHz.

The bandwidth of the test receiver (R&S Test Receiver ESHS30) is set at 10KHz.

We pretest AC 120V and AC 240V, the worst voltage was AC 120V and the data recording in the report.

5.7. Test Result

N/A

NOTE: This EUT is powered by DC power only, this test item is not applicable.

6. RADIATED EMISSION MEASUREMENT

6.1. Block Diagram of Test Setup

6.1.1.Block Diagram of connection between the EUT and the simulators

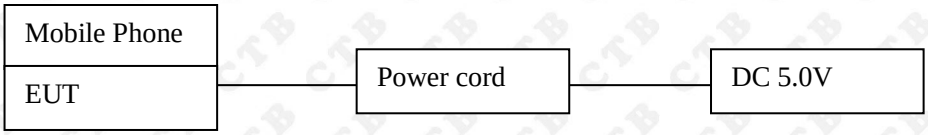

6.1.2.Anechoic Chamber Test Setup Diagram

（A）Radiated Emission Test-Up Frequency Below 30MHz

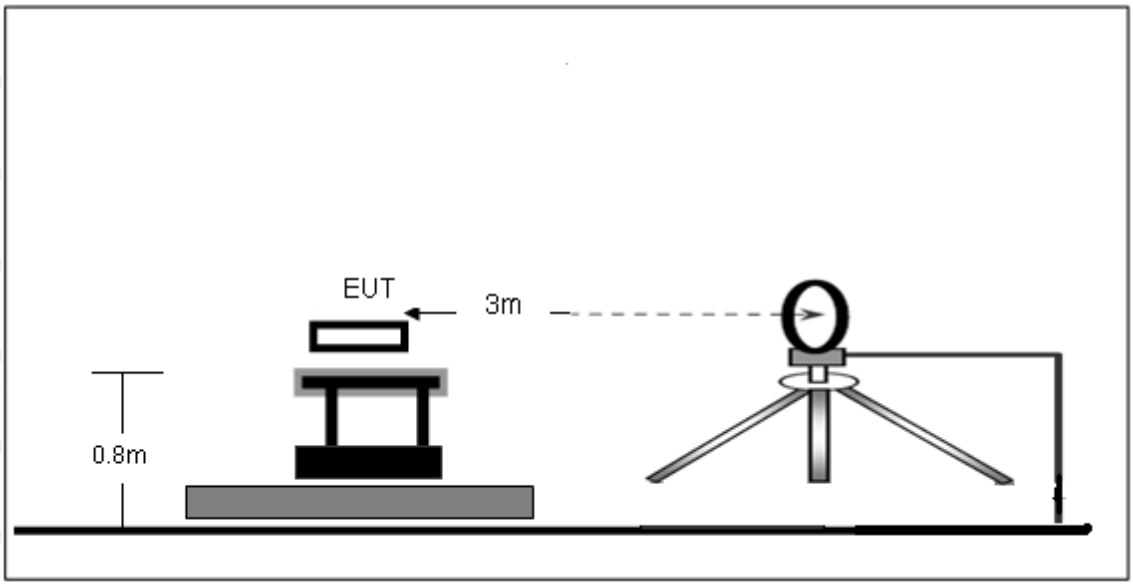

（B）Radiated Emission Test-Up Frequency 30MHz~1GHz

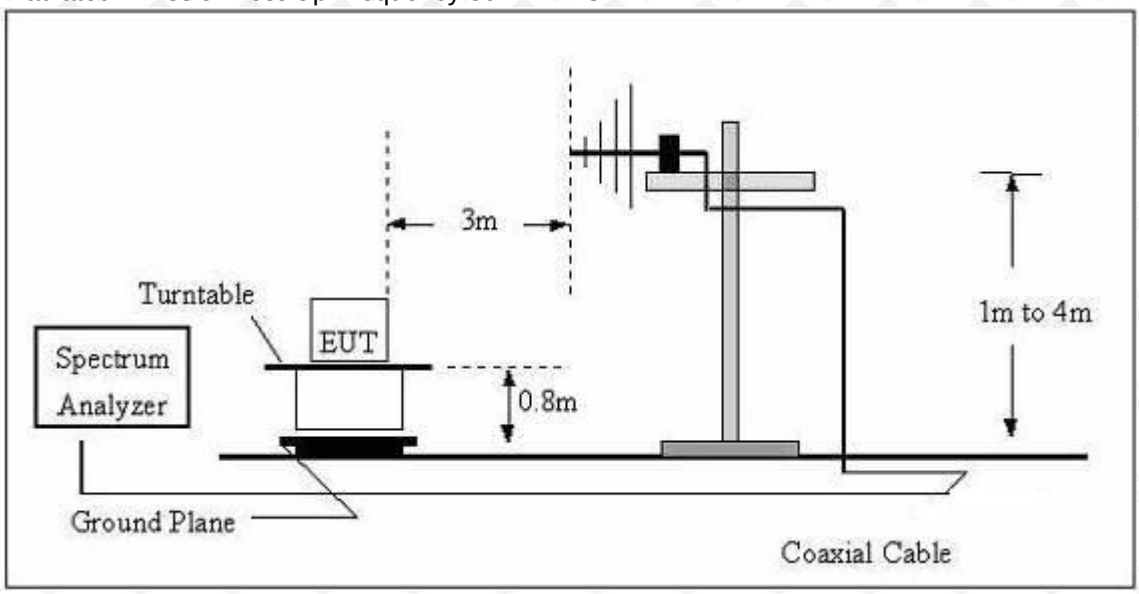

The radiated emission tests were performed in the 3 meters chamber test site, using the setup accordance with the ANSI C63.10-2013. The specification used was the FCC 15.209 and FCC 15.205 limits.

6.2. Test Standard

FCC §15.209; §15.205

6.3. EMI Test Receiver Setup

The system was investigated from 9kHz to1GHz.

During the radiated emission test, the EMI test receiver setup was set with the following configurations:

Frequency Range	RBW	Video B/W	Detector
9 kHz – 150 kHz	200 kHz	1 kHz	QP
150 kHz – 30MHz	9kHz	30kHz	QP
30 MHz – 1000 MHz	120 kHz	300 kHz	QP

Note: For the frequency bands 9-90 kHz and 110-490 kHz, the test was based on average detector.

6.4. Test Procedure

The EUT is placed on a turn table which is 0.8 meter above ground. The turn table can rotate 360 degrees to determine the position of the maximum emission level. The EUT is set 3 meters away from the receiving antenna which is mounted on a antenna tower. The antenna can move up and down between 1 to 4 meters to find out the maximum emission level. Broadband antenna (calibrated by dipole antenna) are used as a receiving antenna. Both horizontal and vertical polarization of the antenna are set on measurement.

6.5. Test Result

PASS

Please refer to the following pages.

9kHz-30MHz

Temperature:	23℃	Relative Humidity:	54%
Pressure:	1010 hPa	Polarization :	Horizontal
Test Voltage:	DC 12V		

Freq.(MHz)	Detector Mode (PK/QP/AV)	Reading(dBuV)	Factor (dB)	ActualFS(d BuV/m)	Limits3m(d BuV/m)	Margin (dBuV/m)
0.125	PEAK	53.03	20.47	73.5	105.67	-32.17
0.358	PEAK	47.12	20.23	67.35	96.53	-29.18
0.535	PEAK	39.81	20.01	59.82	73.04	-13.22
0.819	PEAK	33.37	19.95	53.32	69.34	-16.02
1.163	PEAK	28.86	19.87	48.73	66.29	-17.56
2.374	PEAK	28.29	19.78	48.07	60.09	-12.02

Note:
Pre-scan in the all of mode, the worst case in of was recorded.
Factor = antenna factor + cable loss – pre-amplifier.
Margin = Limit - Emission Level.

30MHz-1GHz

Temperature:	23℃	Relative Humidity:	54%
Pressure:	1010 hPa	Polarization :	Horizontal
Test Voltage:	DC 12V		

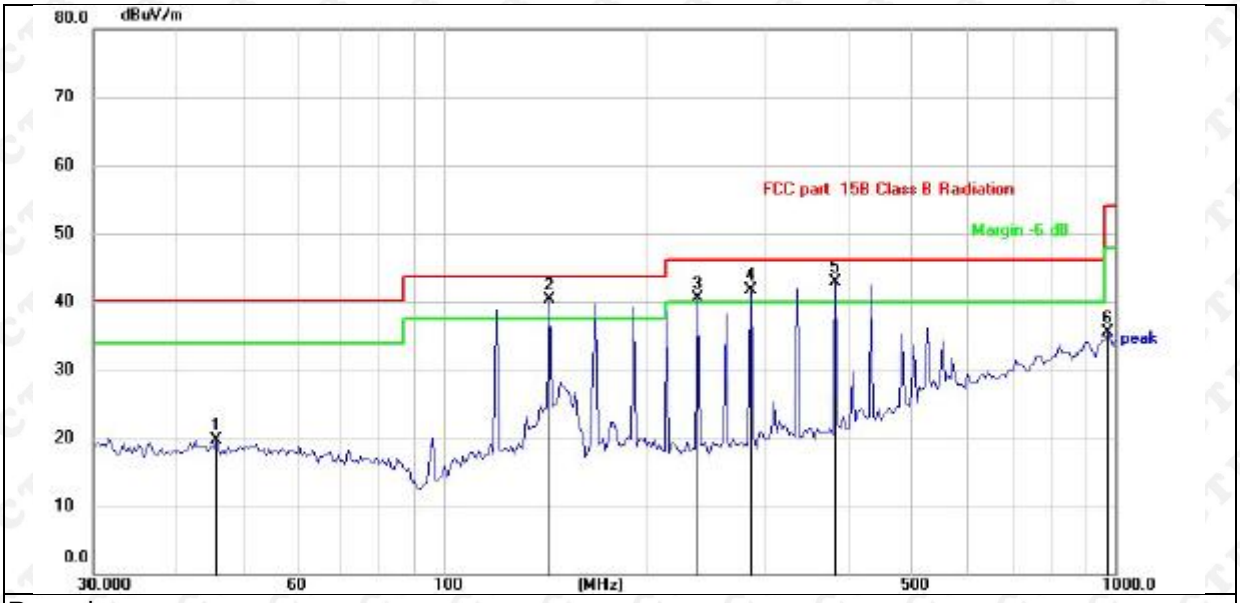

Remark:
Factor = Antenna Factor + Cable Loss – Pre-amplifier, Margin = Measurement– Limit.

No.	Mk.	Freq.	Reading Level	Correct Factor	Measure-ment	Limit	Over	
		MHz	dBuV	dB	dBuV/m	dB/m	dB	Detector
1		45.6947	26.40	-6.74	19.66	40.00	-20.34	QP
2	!	144.0819	43.94	-3.72	40.22	43.50	-3.28	QP
3	!	239.5669	44.61	-4.02	40.59	46.00	-5.41	QP
4	!	287.9904	44.74	-3.12	41.62	46.00	-4.38	QP
5	*	384.6055	43.99	-1.06	42.93	46.00	-3.07	QP
6		974.0436	26.66	8.78	35.44	54.00	-18.56	QP

Temperature:	23℃	Relative Humidity:	54%
Pressure:	1010 hPa	Polarization :	Vertical
Test Voltage:	DC 12V		

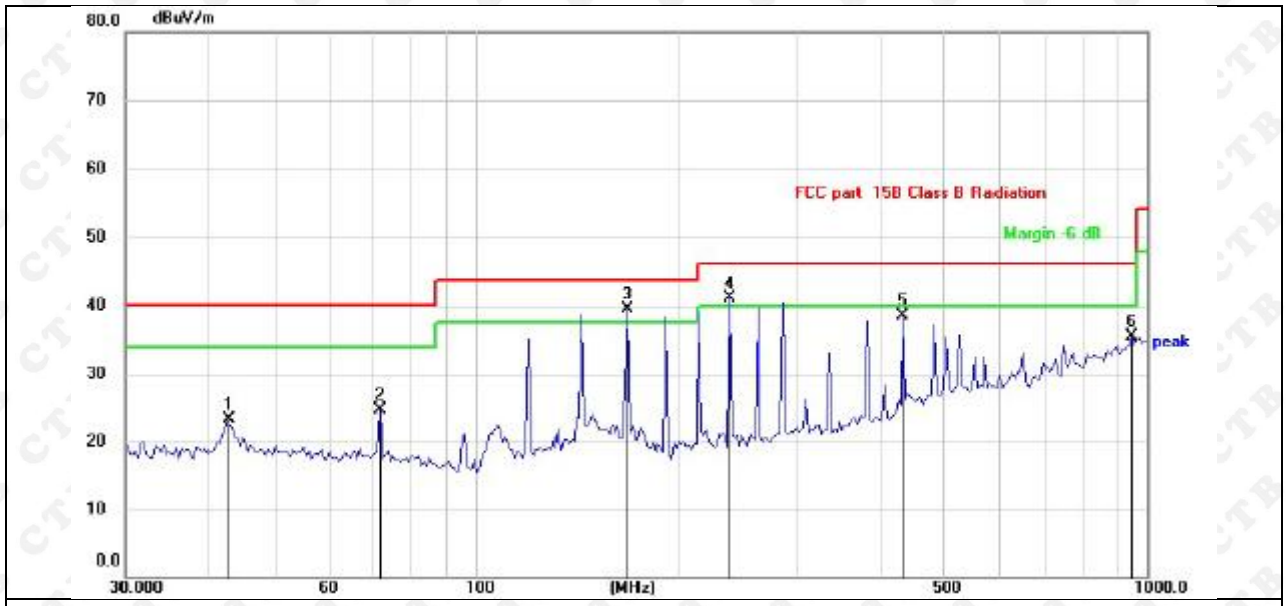

Remark:
Factor = Antenna Factor + Cable Loss – Pre-amplifier, Margin = Measurement– Limit.

No.	Mk.	Freq.	Reading Level	Correct Factor	Measure-ment	Limit	Over	
		MHz	dBuV	dB	dBuV/m	dB/m	dB	Detector
1		42.6000	30.07	-6.83	23.24	40.00	-16.76	QP
2		72.0841	33.32	-8.69	24.63	40.00	-15.37	QP
3	*	168.7093	41.49	-1.92	39.57	43.50	-3.93	QP
4	!	239.5669	45.12	-4.02	41.10	46.00	-4.90	QP
5		434.8267	38.22	0.28	38.50	46.00	-7.50	QP
6		948.7608	26.92	8.60	35.52	46.00	-10.48	QP

7. OCCUPIED BANDWIDTH

7.1. Block Diagram of Test Setup

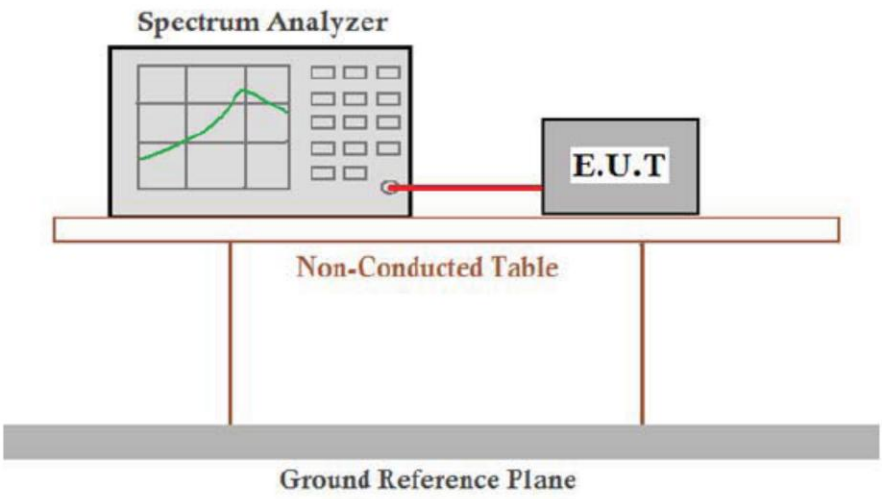

7.2. Rules and specifications

CFR 47 Part 15.215(c)
ANSI C63.10-2013

7.3. Test Procedure

Intentional radiators operating under the alternative provisions to the general emission limits, as contained in §§15.217 through 15.257 and in subpart E of this part, must be designed to ensure that 20dB bandwidth of the emission, or whatever bandwidth may otherwise be specified in the specific rule section under which the equip compliance with the 20dB attenuation specification may base on measurement at the intentional radiator's antenna output terminal unless the intentional radiator uses a permanently attached antenna, in which case compliance shall be.deomonstrated by measuring the radiated emissions.

7.4. Test Result

PASS

Mode	Freq (KHz)	20dB Bandwidth (Hz)	Limit (Hz)	Conclusion
Tx Mode	125	257	/	PASS

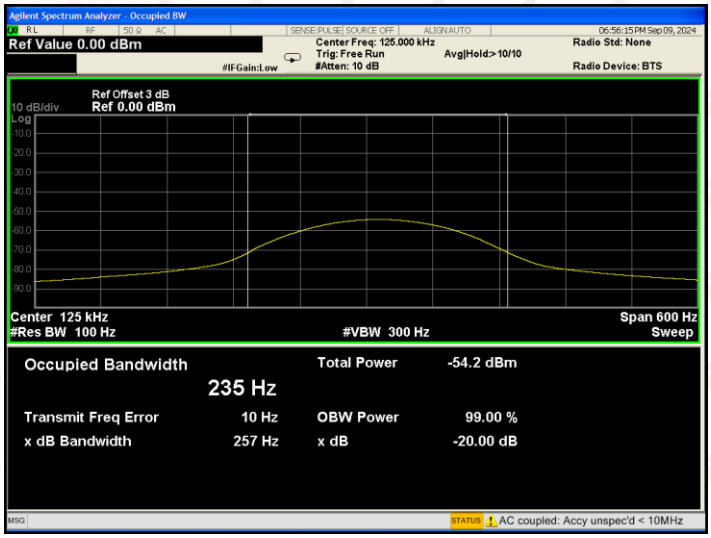

8. EUT TEST PHOTOS

9KHz-30MHz

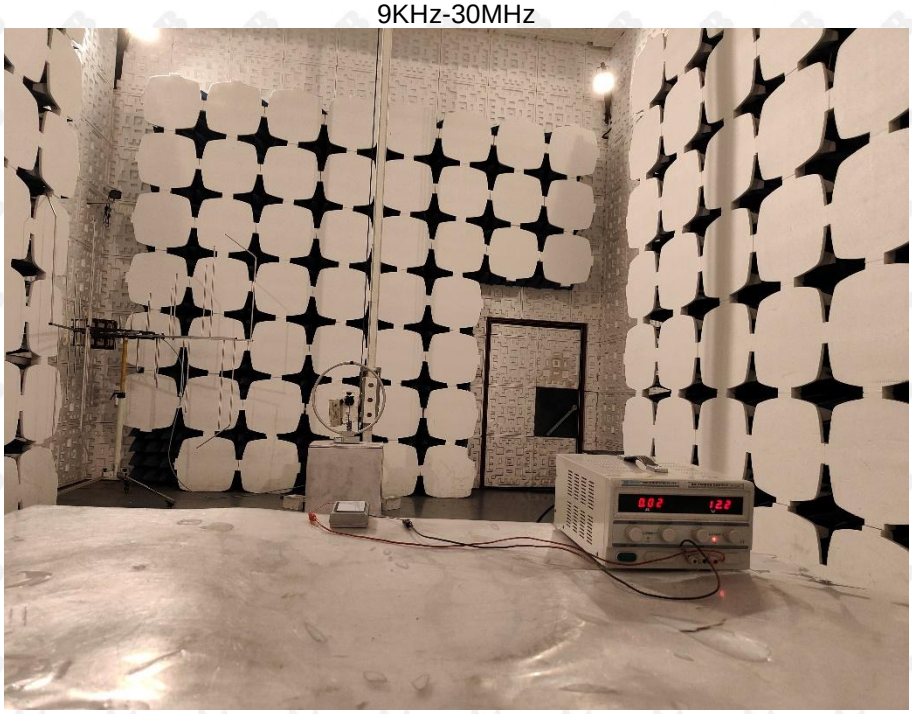

30MHz-1GHz

※※※※※ **END OF REPORT** ※※※※※