Standalone Keypad Access Control

User Manual

Please read the manual carefully before use this unit

1.Packing List

Name	Quantity	Remarks
Keypad	1	
User manual	1	
Screw driver	1	Φ20mm×60mm,Special for keypad
Rubber plug	2	Φ6mm×30 mm, used for fixing
Self tapping screws	2	Φ4mm×28 mm, used for fixing
Star screws	1	Φ3mm×6mm, used for fixing

Please ensure that all the above contents are correct. If any are missing please notify the supplier of the unit.

2. Quick Reference Programming Guide

To enter the programming mode	* Master code # 999999 is the default factory master code
To exit from the programming mod	*
Note that to undertake the following programming the master user must be logged in	
To change the master code	0 New code # New code # The master code can be 6 to 8 digits
To add a PIN user.	1 User ID number # PIN # The ID number is any number between 1 & 2000. The PIN is any four digits between 0000 & 9999 with the exception of 1234 which is reserved. Users can be added continuously without exiting programming mode
To add a card user	1 Read Card # Cards can be added continuously without exiting programming mode
To delete a PIN or a card user.	2 User ID number # for a PIN user or 2 Read Card # for a card user Users can be deleted continuously without exiting programming mode
To unlock the door for a PIN user	Enter the PIN then press #
To unlock the door for a card user	Present the card

3.Description

The unit is single door multifunction standalone access controller or a Wiegand output keypad or card reader. It is suitable for mounting either indoor or outdoor in harsh environments. It is housed in a strong, sturdy and vandal proof Zinc Alloy electroplated case which is available in either a bright silver or matt silver finish. The electronics are fully potted so the unit is waterproof and conforms to IP68. This unit supports up to 2000 users in either a Card, 4 digit PIN, or a Card + PIN option. The inbuilt card reader supports 125KHZ EM cards, The unit has
many extra features including lock output current short circuit protection, Wiegand output , and a backlit keypad. These features make the unit an ideal choice for door access not only for small shops and domestic households but also for commercial and industrial applications such as factories, warehouses, laboratories, banks and prisons.

4.Features

- Waterproof, conforms to IP65/IP68
- Strong Zinc Alloy Electroplated anti-vandal case
- Full programming from the keypad
- 2000 users, supports Card, PIN, Card + PIN
- Can be used as a stand alone keypad
- Backlight keys
- Master add card/delete card support
- Wiegand 26 input for connection to external reader
- Wiegand 26 output for connection to a controller
- Adjustable Door Output time, Alarm time, Door Open time
- Very low power consumption (30mA)
- Fast operating speed, <20ms with 2000 users
- Lock output current short circuit protection
- Easy to install and programme
- Built in buzzer
- Red, Yellow and Green LEDS display the working status

5.Specifications

Operating Voltage	DC 12V±10%
User Capacity	2000
Card Reading Distance	3-6 cm
Active Current	＜60mA
Idle Current	25±5 mA
Lock Output Load	Max 3A
Operating Temperature	-45℃～60℃
Operating Humidity	10%- 90% RH
Waterproof	Conforms to IP68
Adjustable Door Relay time	0 -99 seconds
Wiegand Interface	Wiegand 26 bit
Wiring Connections	Electric Lock, Exit Button, External Alarm,External reader

6.Installation

- Remove the back cover from the keypad using the supplied special screw driver
- Drill 2 holes on the wall for the self tapping screws and dig a hole for the cable
- Put the supplied rubber bungs into the two holes
- Fix the back cover firmly on the wall with 2 self tapping screws
- Thread the cable through the cable hole
- Attach the keypad to the back cover.

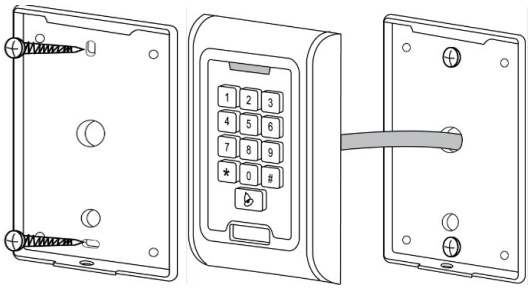

7.Wiring

Colour	Function	Description
Pink	BELL_A	Doorbell button one end (optional)
Pale blue	BELL_B	Doorbell button to the other end (optional)
Green	D0	WG output D0
White	D1	WG output D1
Yellow	OPEN	Exit button one end(the other end connected GND)
Red	12V+	12V + DC Regulated Power Input
Black	GND	12V - DC Regulated Power Input
Blue	NO	Relay normally-on end(Connect positive electric lock "-")
Purple	COM	Relay Public end, connect GND
Orange	NC	Relay Closed end(connect negative electric lock "-")

common power supply diagram:

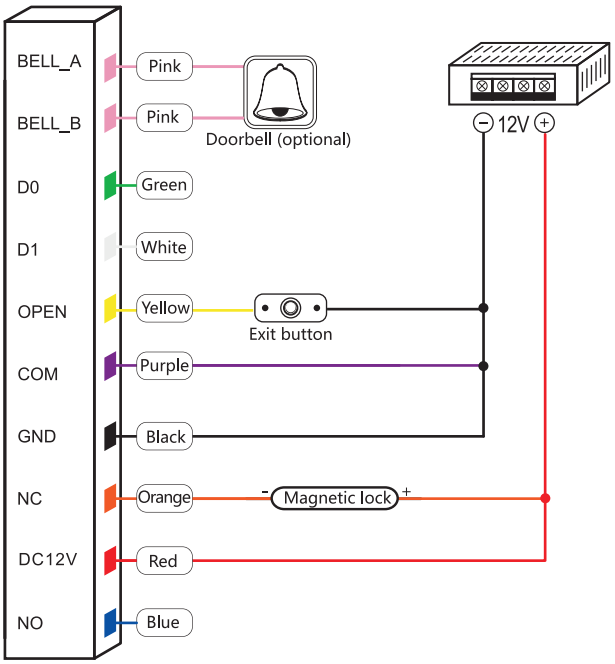

special power supply diagram:

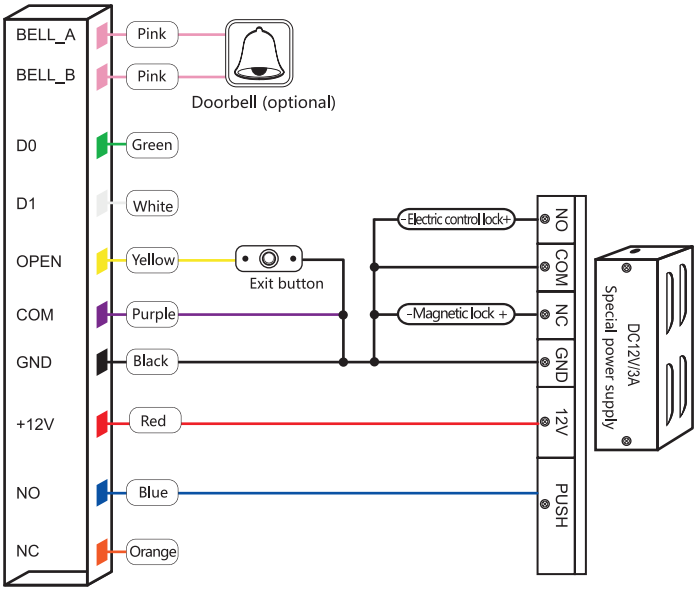

8.To Reset to Factory Default and Match Master Card

Reset to Factory Default

Method 1: Power off, power on, when the indicator light turn orange,press the # key,swipe the first card as for master add card, swipe the second card as for master delete card,on hearing tick tick-tick sound thrice, the master code has been reset to 999999, factory default settings is successful.

Method 2: Power off,press the exit button continously,power on,sound "tick-tick" twice, then release hand,the indicator light turns orange,if need to register master cards, pls swipe the first card as for master add card, swipe the second card as for master delete card within 10s, if not,sound "tick-" once after 10s,the master code has been reset to 999999, factory default settings is successful.

* Registered user data won't be deleted when reset to factory default

9.Master Card Operation

9.1 Add Card

Read master add card | Read the 1st user card | Read the 2nd user card ...

Read master add card

Note: The master add card is used to add card users continuously and quickly. When you read the master add card at the first time, you will hear short "BEEP" sound once and the indicator light turns orange, it means you have entered into add user programming. When you read the master add card at the second time, you will hear long "BEEP" sound once and the indicator light turns red, it means you have exited the add user programming.

9.2 Delete Card

Read master delete card | Read the 1st user card | Read the 2nd user card ...

Read master delete card

Note: The master delete card is used to delete card users continuously and quickly. When you read the master delete card at the first time, you will hear short "BEEP" sound once and the indicator light turns orange, it means you have entered into delete user programming. When you read the master delete card at the second time, you will hear long "BEEP" sound once, the indicator light turns red, it means you have exited the delete user programming.

10.Sound and Light indication

Operation Status	Red Light	Green Light	Yellow Light	Buzzer
Power on	-	Bright	-	Di
Stand by	Bright	-	-	-
Press keypad	-	-	-	Di
Operation successful	-	Bright	-	Di
Operation failed	-	-	-	DiDiDi
Enter into programming mode	Bright	-	-	
In the programming mode	-	-	Bright	Di
Exit from the programming mode	Bright	-	-	Di
Open the door	-	Bright	-	Di
Alarm	Bright	-	-	Alarm

11. Detailed Programming Guide

11.1 User Settings

To enter the programming mode	* Master code # 999999 is the default factory master code
To exit from the programming mode	*
Note that to undertake the following programming the master user must be logged in	
To change the master code	0 New code # New code # The master code can be 6 to 8 digits
Setting the working mode: Set valid card only users Set valid card and PIN users Set valid card or PIN users	 3 0 # Entry is by card only 3 1 # Entry is by card and PIN together 3 2 # Entry is by either card or PIN (default)
To add a user in either card or PIN mode, i.e. in the 3 2 # mode. (Default settings)	
To add a **Pin** user	1 User ID number # PIN # The ID number is any number between 1 & 2000. The PIN is any four digits between 0000 & 9999 with the exception of 1234 which is reserved. Users can be added continuously without exiting programming mode as follows: 1 User ID no 1 # PIN # User ID no 2 # PIN #
To delete a **PIN** user	2 User ID number # Users can be deleted continuously without exiting programming mode
To change the **PIN** of a **PIN** user *(This step must be done out of programming mode)*	* ID number # Old PIN # New PIN # New PIN #
To add a **card** user (Method 1) This is the fastest way to enter cards, user ID number auto generation.	1 Read card # Cards can be added continuously without exiting programming mode
To add a **card** user (Method 2) This is the alternative way to enter cards using User ID Allocation. In this method a User ID is allocated to a card. Only one user ID can be allocated to a single card.	1 ID number # Read card # User can be added continuously without exiting programming mode

To add a **card** user (Method 3) Card number is the last 8 digits printed on the back of the card,user ID number auto generation	1 Card number (8 digits or 10 digits) # User can be added continuously without exiting programming mode
To add a **card** user (Method 4) In this method a User ID is allocated to a card number. Only one user ID can be allocated to the card number	1 ID number. # Card number (8 digits or 10 digits). # User can be added continuously without exiting programming mode
To delete a **card** user by card. Note users can be deleted continuously without exiting programming mode	2 Read Card #
To delete a **card** user by user ID. This option can be used when a user has lost their card	2 User ID #
To delete a **card** user by card number. This option can be used when the user want to make the change but the card has lost	2 Card number (8 digits or 10 digits) # Note users can be deleted continuously without exiting programming mode
To add a **card and PIN** user in card and PIN mode (3 1 #)	
To Add a **card and Pin** user (The PIN is any four digits between 0000 & 9999 with the exception of 1234 which is reserved.)	Add the card as for a card user Press * to exit from the programming mode Then allocate the card a PIN as follows: * Read card 1234 # PIN # PIN #
To change a **PIN** in card and PIN mode (Method 1) Note that this is done outside programming mode so the user can undertake this themselves	* Read Card Old PIN # New PIN # New PIN #
To change a **PIN** in card and PIN mode (Method 2) Note that this is done outside programming mode so the user can undertake this themselves	* ID number # Old PIN # New PIN # New PIN #
To delete a **Card and PIN** user just delete the card	2 User ID #
To add a **card** user in card mode (3 1 #)	

To Add and Delete a **card** user	The operating is the same as adding and deleting a card user in [3][2][#]
To delete **All users**	
To delete **ALL users.** Note that this is a dangerous option so use with care	[2][0000][#]
To unlock the door	
For a **PIN** user	Enter the [PIN] then press [#]
For a **card** User	[Read card]
For a **card and PIN** user	[Read card] then press [PIN #]

11.2 Door Settings

Relay Output Delay Time	
To set door relay strike time	[*][Master code][#][4][0～99][#][*] 0-99 is to set the door relay time 0-99 seconds
Alarm output time	
To set the alarm output time (0-3 minutes) Factory default is 1 minute	[5][0～3][#]
Keypad Lockout & Buzzer Actived. If there are 10 invalid cards or 10 incorrect PIN numbers in a 10 minute period either the keypad will lockout for 10 minutes and the inside buzzer will operate for 10 minutes, depending on the option selected below.	
Normal status: No keypad lockout or buzzer operate (factory default)	[7][0][#] (Factory default settings)
Keypad Lockout	[7][1][#]
Inside buzzer operate	[7][2][#]
Working Modes	
Standalone access control mode	[*][Master code][#][7][3][#] The door will be locked automatically after open the door normally
Relay toggle mode	[*][Master code][#][7][4][#] The door will not be locked automatically.To lock the door, the user has to read the card or press the exit button.
Reader mode	[*][Master code][#][7][5][26/34][#] WG26/34 input and output

Data Backup. Example: Backup the data of machine A to machine B (Must close the Keypad output ,(* Master code # 8 8 #) The green wire and white wire of machine A connects with the green wire and white wire of machine B correspondingly, set B for receiving mode at first, then set A for sending mode, the indicator light turns green flash during the data backup, data backup is successful when indicator light turns red.		
Data backup input	* Master code # 7 7 # The device will receive the data.	
Data backup output	* Master code # 7 6 # The device will receive the data.	
LED Light & Buzzer & Keypad Settings		
LED Light Flash	* Master code # 80 #	Default
LED Light off	* Master code # 81 #	LED light stay off
Keypad Light on	* Master code # 82 #	Keypad light stay on
Keypad Light off	* Master code # 83 #	Keypad light stay off
Keypad light automatic	* Master code # 84 #	Normally it is off(sleeping mode) but wake up with human approach
Buzzer on	* Master code # 85 #	Default
Buzzer off	* Master code # 86 #	The buzzer doesn't sound
Keypad output on	* Master code # 87 #	keypad output is turned on
Keypad output off	* Master code # 88 #	keypad output must be turned off during data backup

12.The unit operating as a Wiegand Output Reader

The unit supports a Wiegand 26 bit output, so the Wiegand data wires can be connected to any controller which supports a Wiegand 26 bit input.

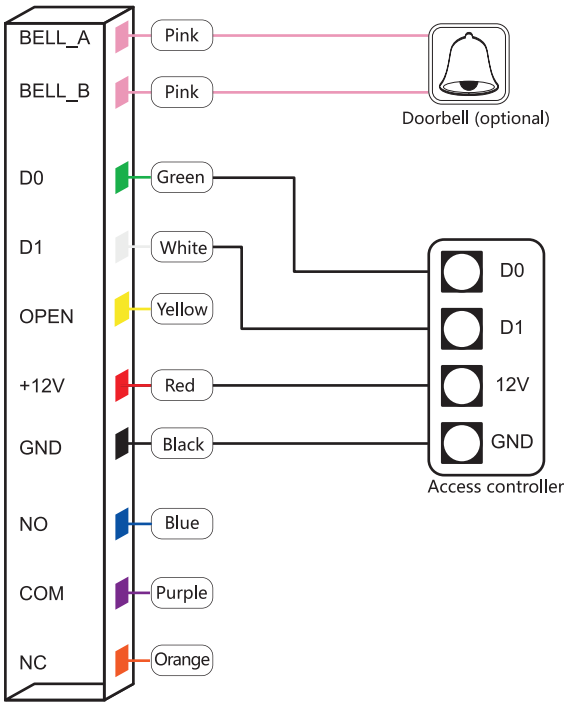

FCC WARNING

This device complies with part 15 of the FCC Rules. Operation is subject to the following two conditions: (1) this device may not cause harmful interference, and (2) this device must accept any interference received, including interference that may cause undesired operation.

Any changes or modifications not expressly approved by the party responsible for compliance could void the user's authority to operate the equipment.

NOTE: This equipment has been tested and found to comply with the limits for a Class B digital device, pursuant to Part 15 of the FCC Rules. These limits are designed to provide reasonable protection against harmful interference in a residential installation. This equipment generates, uses and can radiate radio frequency energy and, if not installed and used in accordance with the instructions, may cause harmful interference to radio communications.

However, there is no guarantee that interference will not occur in a particular installation. If this equipment does cause harmful interference to radio or television reception,

which can be determined by turning the equipment off and on, the user is encouraged to try to correct the interference by one or more of the following measures:

-- Reorient or relocate the receiving antenna.

-- Increase the separation between the equipment and receiver.

-- Connect the equipment into an outlet on a circuit different from that to which the receiver is connected.

-- Consult the dealer or an experienced radio/TV technician for help.

To maintain compliance with FCC’s RF Exposure guidelines, This equipment should be installed and operated with minimum 20cm distance between the radiator and your body: Use only the supplied antenna.