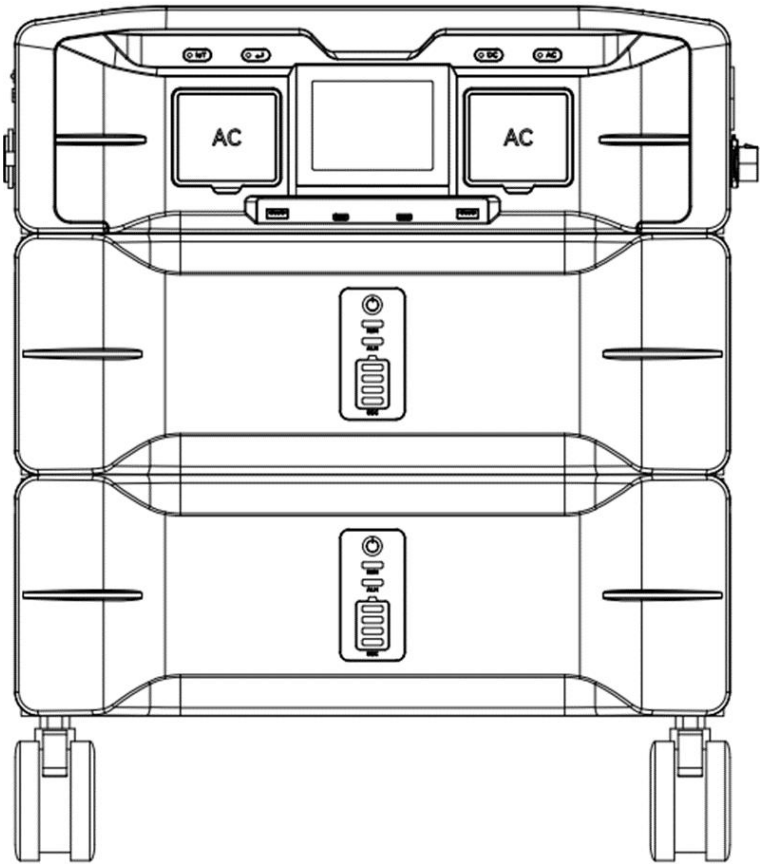

SP5000 Portable Power Station

Split Phase

User manual

Version:V2.0

About This Manual

This manual describes the product information, installation, electrical connection, commissioning, troubleshooting, and maintenance. Read through this manual before installing and operating the product. All the installers and users have to be familiar with the product features, functions, and safety precautions. This manual is subject to update without notice.

Features

1. Power low-voltage and high-voltage loads.
2. Max. 3450W AC super charge.
3. 2.56~10.24kWh expandable battery capacity.
4. Max. 5000W high power AC output.
5. 10ms auto-transfer from on grid to off grid.
6. APP smart control.

Applicable Model

The manual does not contain complete information about photovoltaic (PV) systems.
This manual is only for products below:

Model	Output power rating	Battery capacity
SP5000	5000W	5.12kWh

Target Audience

This manual applies to trained and knowledgeable technical professionals. The technical personnel have to be familiar with the product, local standards, and electric systems.

How to Use This Manual

Read the manual and other related documents before performing any operation on the inverter. Documents must be stored carefully and be available at all times.
Contents may be periodically updated or revised due to product development. The information in this manual is subject to change without notice.

Symbol Explanation

SP5000 Portable Power Station is designed and tested in strict accordance with international safety regulations. Read all safety instructions carefully prior to any work and observe them at all times when working on or with the inverter operation and maintenance, as any improper operation might cause personal injury or property damage.

DANGER indicates danger that, if not avoided, will result in death or serious injury.

WARNING indicates a warning that, if not avoided, may result in death or serious injury.

CAUTION indicates a caution, if not avoided, may result in minor or moderate injury.

NOTICE Indicates hints, highlights key information.

	Potential risks exist. Wear proper PPE before any operations.		DANGER High voltage hazard. Disconnect all incoming power and turn off the product before working on it.
	High-temperature hazard. Do not touch the product under operation to avoid being burnt.		Do not touch live parts for 5 minutes after disconnecting from the power sources.
	The components of the product can be recycled.		Products shall not be disposed as household waste.
	Read through the user manual before any operations.		CE mark.
	Do not disconnect under load.		FCC

Contents

About This Manual ..... **I**
Features I
Applicable Model I
Target Audience I
How to Use This Manual I
Symbol Explanation I
1 Safety Instructions **1**
1.1 General 1
1.2 Installation 1
1.3 Electrical Connection 2
1.4 Operation 2
1.5 Maintenance 2
1.6 Battery Safety Instruction 2
2 Product Introduction **4**
2.1 Product Overview 4
2.2 Display Screen 4
3 Storage **7**
4 Installation **8**
4.1 Check before Unpacking 8
4.2 Packing List 8
4.3 Operating Environment 9
4.4 Maximum Battery Expansion 10
4.5 Usage Clearance 10
4.6 Mounting Battery Packs 11
5 Operating Instruction **13**
5.1 System Overviews 13
5.2 Button Instructions 14
5.3 Charging Instructions 17
6 Failure and Maintenance **18**
6.1 Failure Display and Troubleshooting 18
6.2 Maintenance 19
7 Specification **20**

1 Safety Instructions

Please strictly follow these safety instructions in the user manual during the operation.

NOTICE

■The inverter has been designed and tested strictly according to international safety regulations. Read all safety instructions carefully prior to any work and observe them at all times when working on or with the inverter.

■ Personnel who install or maintain the equipment must be strictly trained and learn about safety precautions and correct operations.

■ Only qualified professionals or trained personnel are allowed to install, operate, maintain, and replace the equipment or parts.

■ Appropriate methods must be adopted to protect the inverter from static electricity damage. Any damage caused by static electricity is not warranted by the manufacturer.

1.1 General

DANGER

■ Ensure that the inverter is not connected to a power supply or powered on before finishing installation or during replacement and maintenance.

■ Do not open the inverter cover or change any components without manufacturer's authorization. Otherwise, the warranty for the inverter will be invalid.

■ Any installation or operations on the inverter must be performed by qualified electricians in compliance with standards, wiring rules and the requirements of local grid authorities or companies.

■ All labels and warning marks should be visible after the installation. Do not cover, scrawl, or damage any label on the equipment.

NOTICE

■ The information in this user manual is subject to change due to product updates or other reasons. This manual cannot replace the product safety labels unless otherwise specified. All descriptions here are for guidance only.

■ Before installations, read through the user manual to learn about the product and the precautions.

■ All operations should be performed by trained and knowledgeable technicians who are familiar with local standards and safety regulations.

1.2 Installation

DANGER

■ Never power on the inverter during installation.

■ Use insulating tools and wear personal protective equipment when operating the equipment to ensure personal safety. Wear anti-static gloves, clothes, and wrist strips when touching electronic devices to protect the inverter from damage.

■ Install in areas where children can not access.

■ Make sure DC input voltage does not exceed the maximum input voltage of the inverter.

1.3 Electrical Connection

DANGER

■ Ensure that the inverter is secured in position before connecting cables, or it can cause personal injury.
■ Ensure that the cables used in the system are properly connected and insulated and meet all specification requirements.
■ Connect the inverter cable to the supplied terminals. If other types of terminals are used, serious damage may occur for which the manufacturer is not responsible.

WARNING

■ The voltage and frequency at the connecting point should meet the on-grid requirements.
■ Additional protective devices like circuit breakers or fuses are recommended on the AC side. Specification of the protective device should be at least 1.25 times the maximum AC input current.

1.4 Operation

DANGER

■ When the inverter is operating, do not disconnect under load.

WARNING

■ The temperature of the inverter surface can exceed 60℃ during operation. Make sure it has cooled down before touching it and make sure the inverter is out of reach of children.

1.5 Maintenance

DANGER

■ High voltage may cause an electric shock, which results in serious property damage, serious injury, or death, or serious property damage Prior to maintenance, power off the inverter and strictly comply with the safety precautions in this document.
■ Before performing maintenance tasks, power off the inverter and wait at least 5 minutes.

1.6 Battery Safety Instruction

DANGER

■ Use the multi-meter to measure the DC cable to avoid reverse polarity connection. Also, the voltage should be under the permissible range.

WARNING

■ Before installation, thoroughly read the SP5000 user manual to familiarize yourself with the product and its safety precautions.

Strictly adhere to the following guidelines:

■ If the battery is completely discharged, charge it according to the instructions provided in the corresponding model's user manual.

■ Environmental factors such as temperature, humidity, and weather conditions may limit the battery's current and impact its load capacity.

■ If the battery fails to start, contact after-sales service immediately. Failure to do so may result in permanent damage to the battery.

■ Do not connect a single battery pack to multiple inverters simultaneously, as this may cause damage to the inverter.

2 Product Introduction

2.1 Product Overview

The SP5000 Portable Power Station (Split Phase) is a portable power supply unit equipped with a built-in LiFePO4 battery and a bi-directional inverter. The battery can be charged using both AC power and solar panels. With the bi-directional inverter, AC charging power is increased, resulting in faster charging speeds. The high-capacity lithium battery provides extended power to connected loads. During AC charging, the internal bypass relay allows the load to be powered directly from the mains.

Appearance

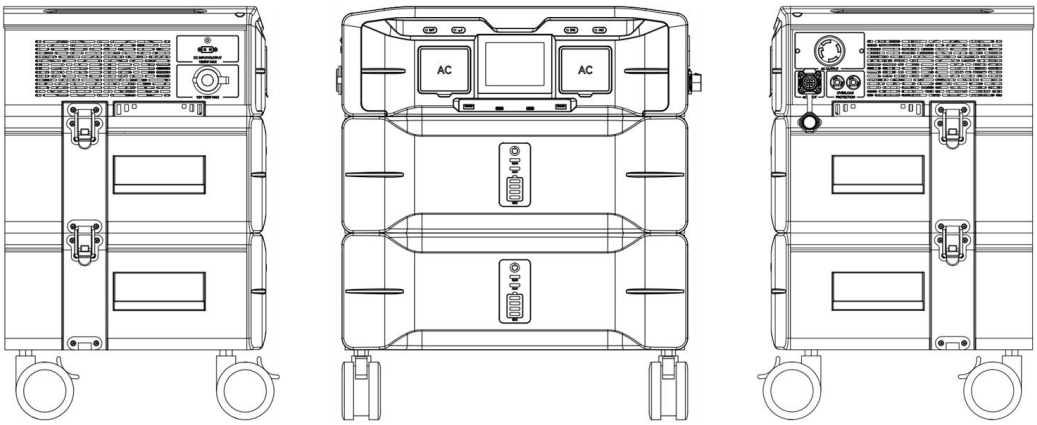

2.2 Display Screen

The icon on the inverter display indicates the current operating status of the inverter.

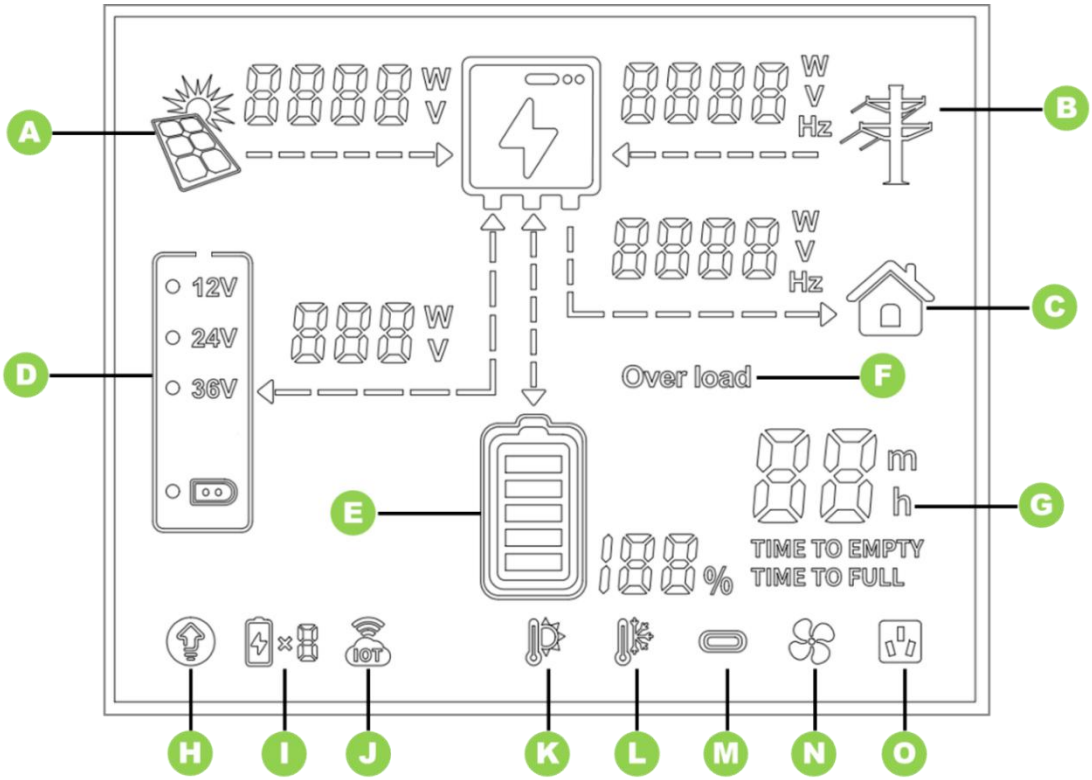

No.	Icon	Description
A	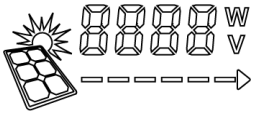	Indicates PV charging status and displays PV charging power in real time.
B		Indicates the charging status of the grid and displays the charging power of the grid in real time.
C	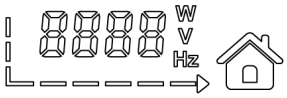	Indicates AC discharge status and displays AC discharge power in real time.
D	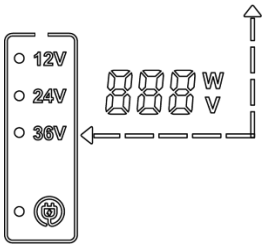	1. Indicates the low-voltage PV charging status and real-time display of low-voltage PV charging power. 2. Three selectable output voltages: 12V, 24V, and 36V. 3. DC charging mode.
E	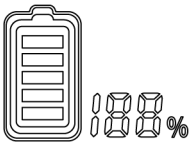	Indicates battery charging/discharging status and displays the battery SOC in real time.
F		Indicates that the device is overloaded.
G	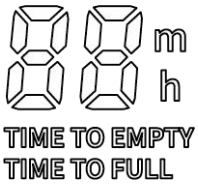	Indicates the time to be empty discharged or fully charged.
H		Indicates AC constant power mode.
I	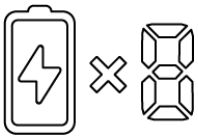	Indicates the number of battery packs.
J		Indicates monitoring connection status.
K		Indicates over-temperature fault.

L		Indicates under-temperature fault.
M		Indicates the active status of the PD Type-C interface.
M	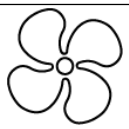	Indicates fan active status.
O	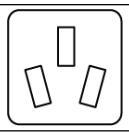	Indicates that the AC is active.

3 Storage

For long-term storage, the product should be discharged to 0% and recharged to 100% at least once every three months. Failing to do so may significantly reduce the battery lifespan.

NOTICE
Storage Requirements for the SP5000: ■ Do not unpack the outer packaging. ■ Store the SP5000 in an environment with a temperature range of –20°C to +50°C and humidity between 5% and 95% RH, ensuring no condensation. ■ Keep the **SP5000** in a clean, dry location, protected from dust and moisture. ■ Follow the stacking instructions on the packaging for proper height and direction when stacking inverters. ■ Handle the **SP5000** with care during stacking to prevent them from falling. ■ Conduct regular inspections during storage and replace packing materials as needed. ■ After long-term storage, the **SP5000** must be inspected and tested by qualified personnel before use.

4 Installation

4.1 Check before Unpacking

NOTICE
Inspection Checklist Upon Receiving the Product: ■ Inspect the packaging for any damage, such as holes, cracks, or other signs of potential equipment damage. If any damage is found, do not unpack the product and contact the supplier immediately. ■ Verify that the inverter model matches your order. If the model is incorrect, do not unpack the product and contact the supplier. ■ Ensure that all inverter accessories are included and in good condition. If any items are missing or damaged, contact the supplier immediately.

4.2 Packing List

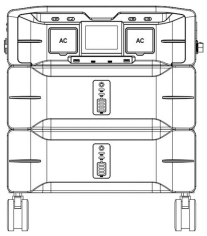	Inverter *1 Battery *2	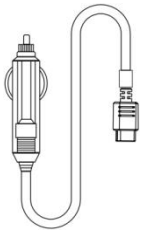	Car charging cable *1
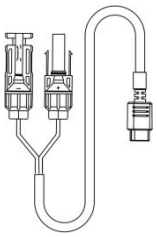	Solar charging cable *1	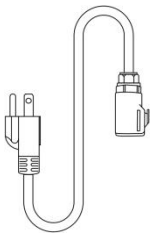	120V AC charging cable *1
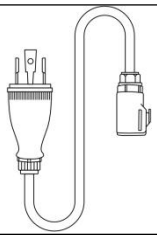	240V AC charging cable *1	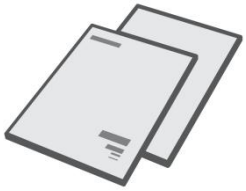	User manual *1 Warranty card *1

4.3 Operating Environment

NOTICE
Environmental Requirements for Use: 1. Do not place the equipment near flammable, explosive, or corrosive materials. 2. Keep the equipment out of reach of children. The equipment operates at high temperatures—avoid touching the surface to prevent burns. 3. Use the equipment in a sheltered area, protected from direct sunlight, rain, and snow. 4. Ensure the location is well-ventilated to allow for proper heat dissipation and provides adequate space for operation. 5. The temperature and humidity at the installation site should remain within the recommended range. 6. The maximum operating altitude should not exceed 2000 meters. 7. Adhere to these guidelines to maximize the lifespan of the inverter.

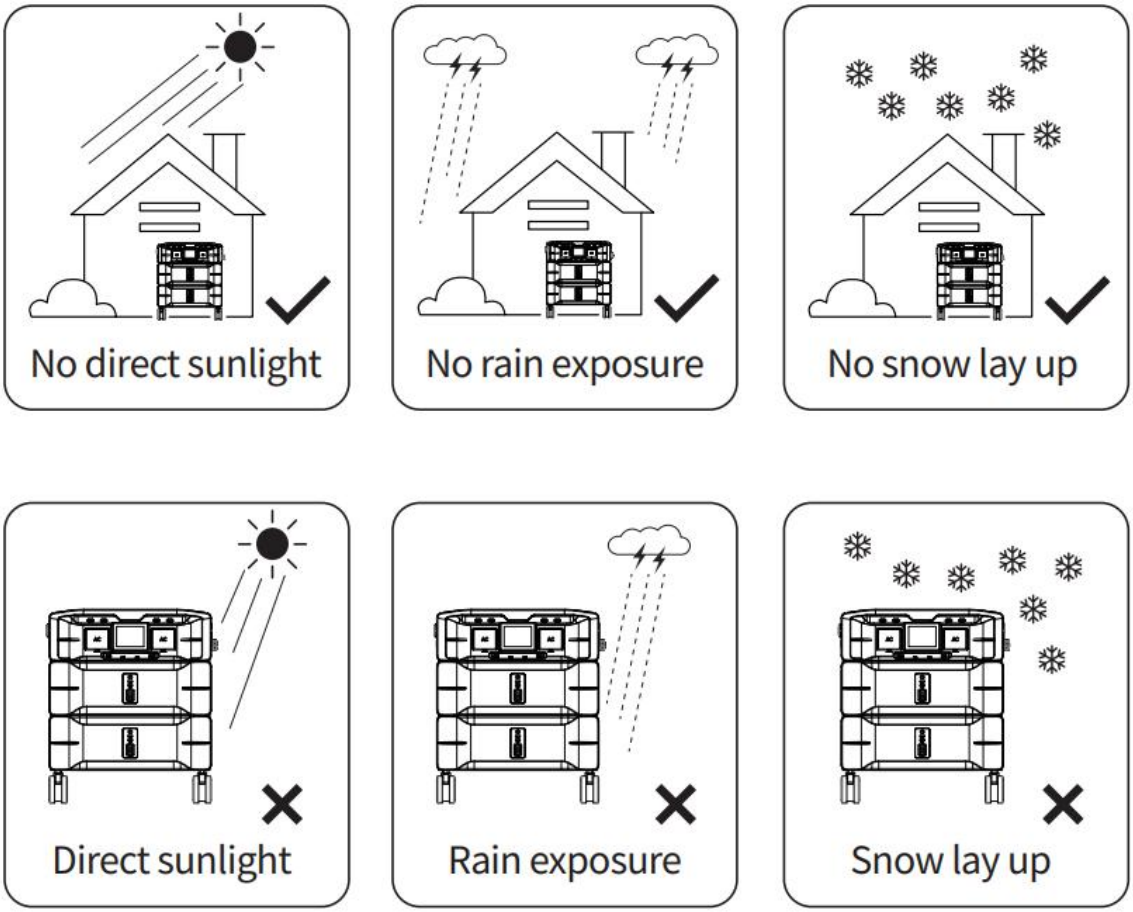

4.4 Maximum Battery Expansion

For optimal performance and safe transportation, the SP5000 supports battery expansion of 4 units (total capacity: 10.24 kWh). Exceeding this limit may negatively affect the product's mobility.

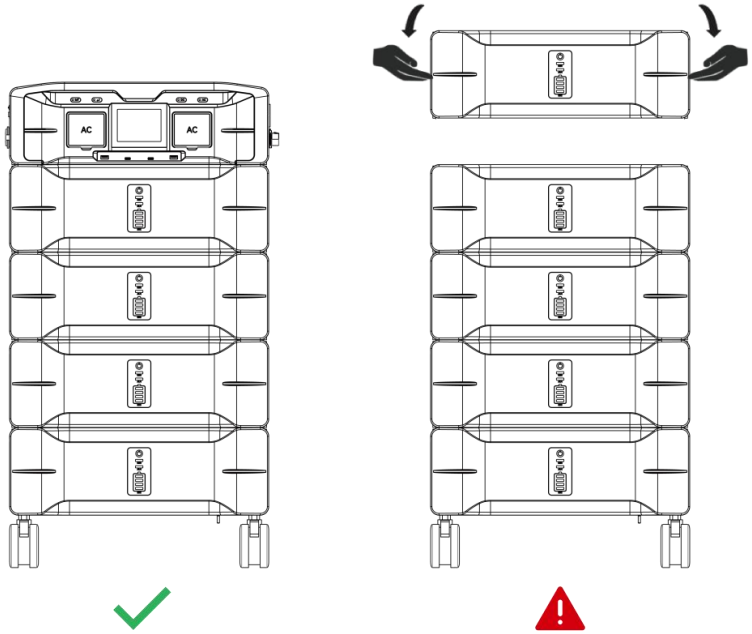

4.5 Usage Clearance

For optimal heat dissipation and ease of dismantling, the minimum clearance around the inverter should not be less than the values specified below.

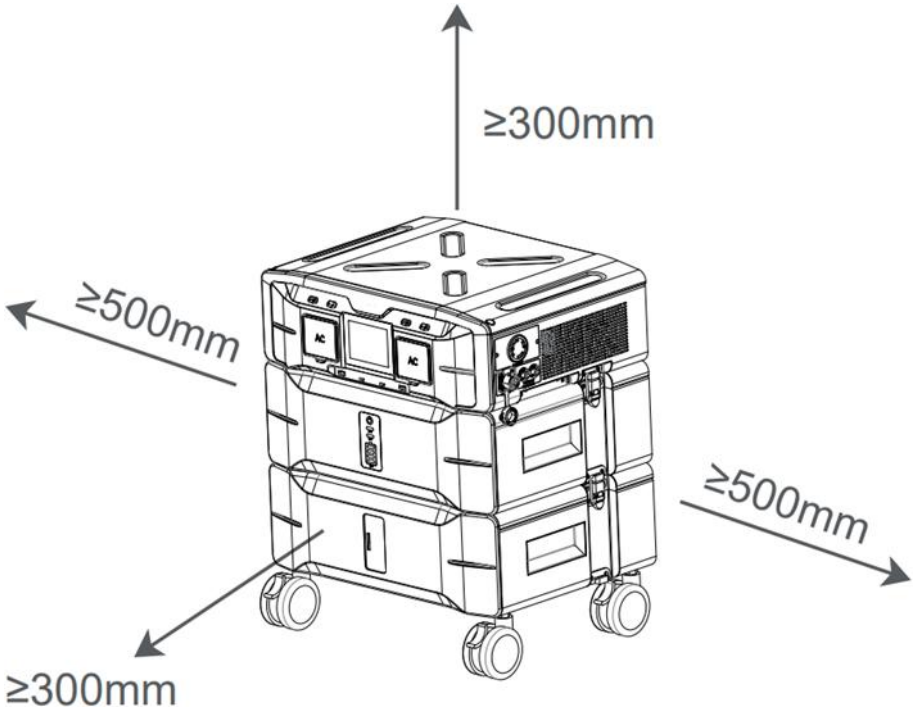

4.6 Mounting Battery Packs

NOTICE

■ To expand the battery pack, please purchase only the official matching standard battery. Using a non-matching or unofficial battery pack may damage the inverter.

■ Follow the steps below to expand the battery pack.

CAUTION

■ Before disassembling, ensure that the load is disconnected, the power is turned off, and the battery is powered down. Failure to do so may result in a short circuit, leakage, or damage to the inverter, posing a risk of injury.

■ It is recommended that two or more personnel be involved in the battery pack installation process.

Step 1: Unlock the metal snap between the inverter and the battery pack.

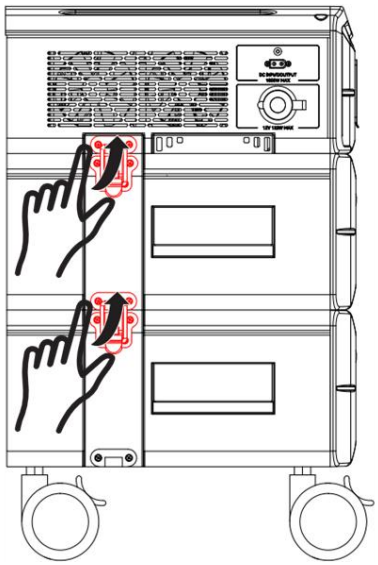

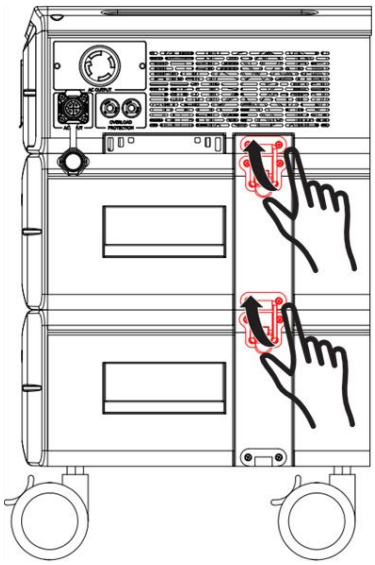

Step 2: Removing the inverter.

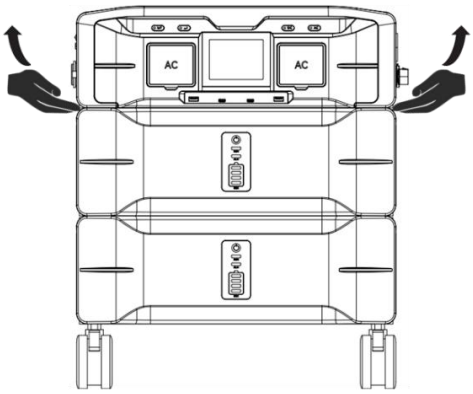

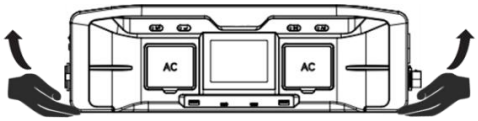

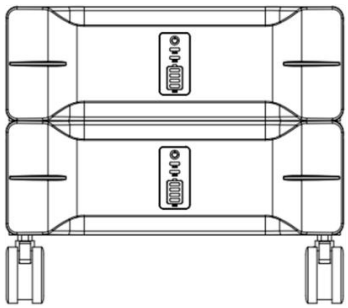

Step 3: Mounting a new battery pack.

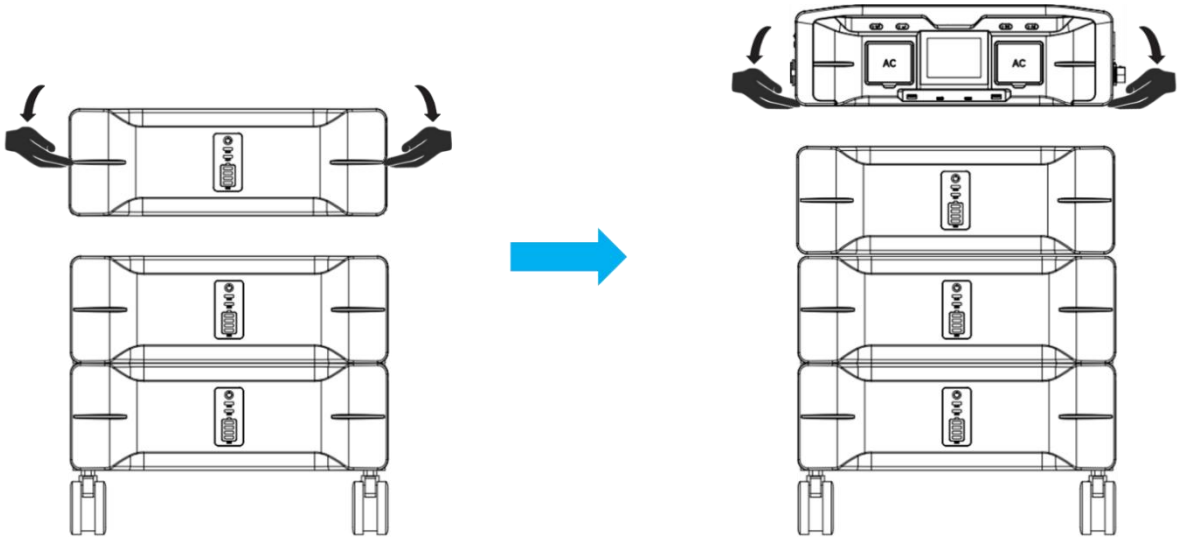

Step 4: Re-lock the metal snap between the inverter and the battery pack.

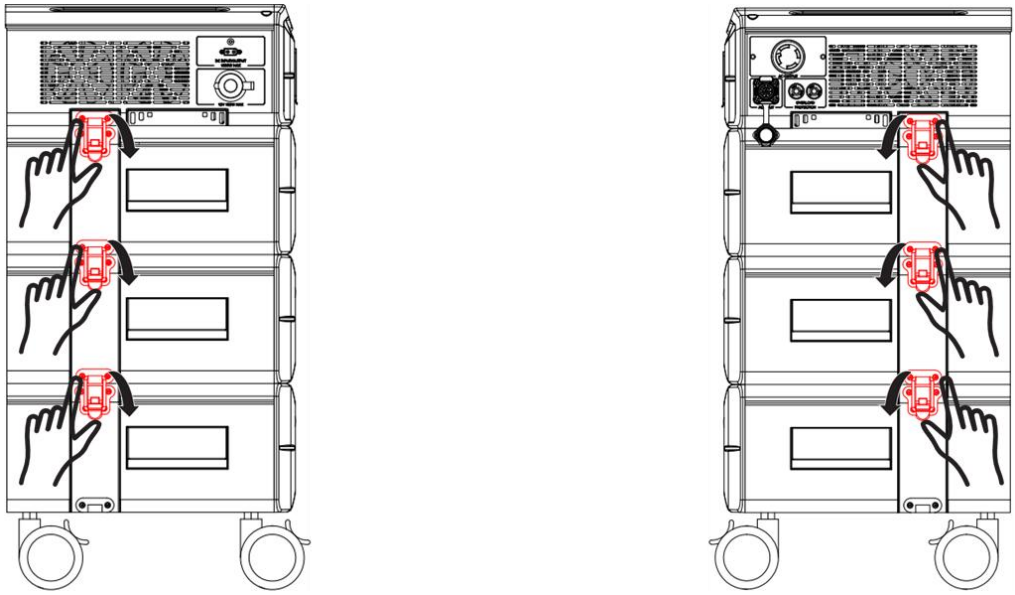

5 Operating Instruction

5.1 System Overviews

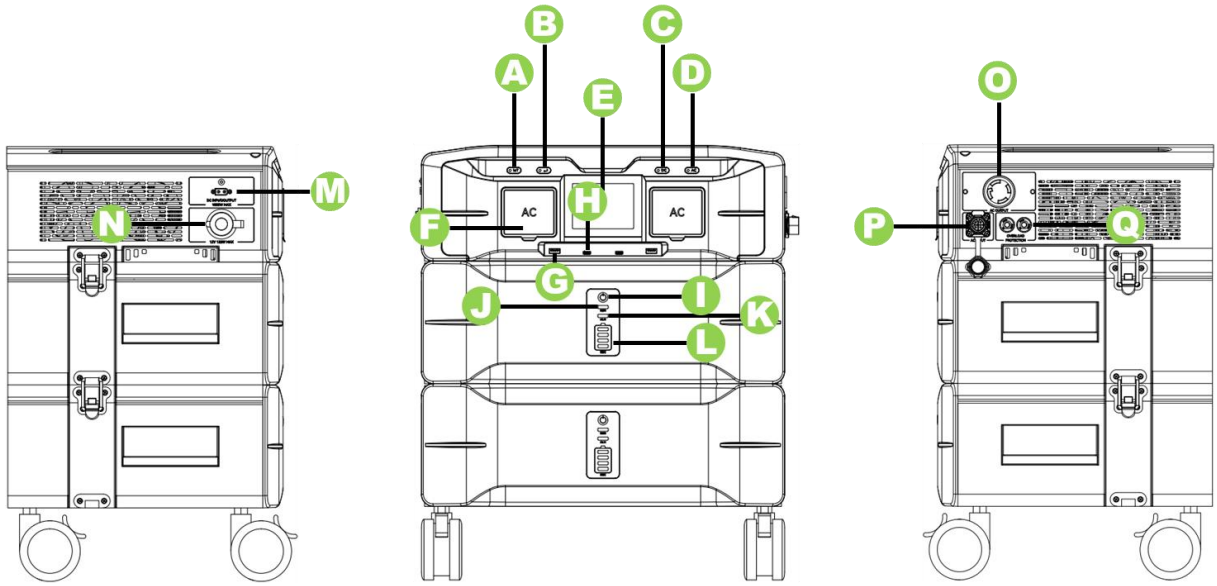

NO.	Description	NO.	Description
A	IoT Reset Switch	J	Operation Indicator
B	Display Mode Button	K	Fault Warning Indicator
C	DC ON/OFF Switch	L	Battery SoC Display
D	AC ON/OFF Switch	M	Solar Input or DC Output (XT60)
E	Display Screen	N	Cigarette lighter outlet
F	120V AC Output	O	240V AC Output
G	USB-A	P	AC Input
H	Type-C	Q	Overload protector
I	Power ON/OFF Switch		

5.2 Button Instructions

① Press and hold the ‘Power ON/OFF Switch’ for 3 to 5 seconds to turn the machine ON and OFF.

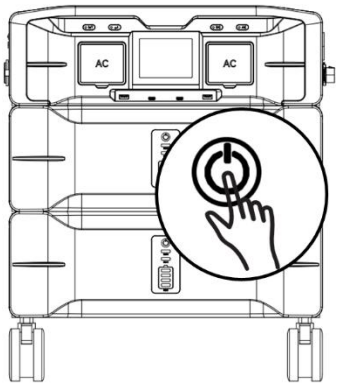

② Press and hold the ‘IoT Reset Switch’ for 3 to 5 seconds (WiFi icon blinks) to pair with WiFi. Double-click the ‘IoT Reset Switch’ to exit the WiFi pairing status.

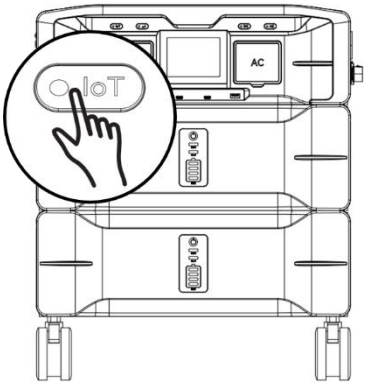

③ Press the 'Display Mode Button' to cycle through the screen display pages. The first click shows the power of L1, the second click shows the voltage of L1, the third click shows the power of L2, and the fourth click shows the voltage of L2.

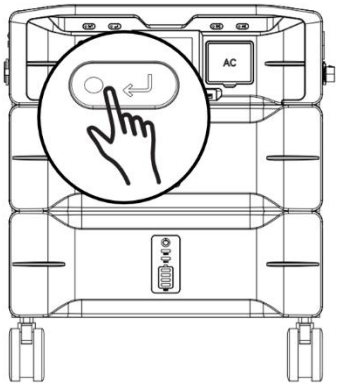

④ Click the ‘DC ON/OFF Switch’ to turn ON/OFF the cigarette lighter outlet. (Car icon appears/disappears on the display)

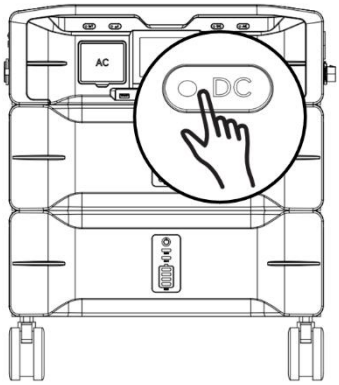

⑤ Click the ‘AC ON/OFF Switch’ to turn ON/OFF the 120V and 240V AC output.

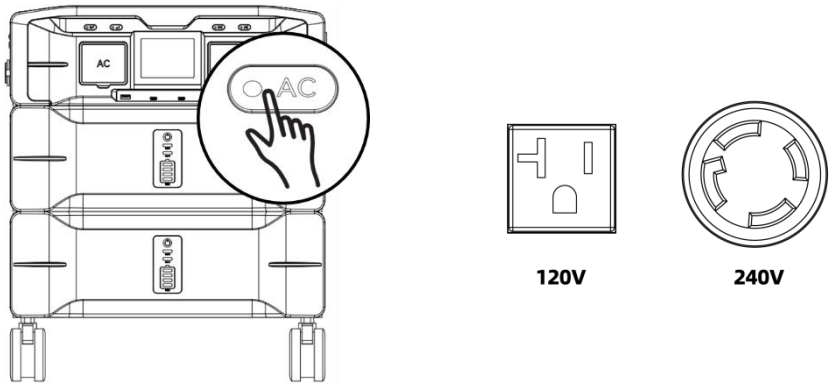

⑥ Press and hold the ‘AC ON/OFF Switch’ and ‘Display Mode Button’ simultaneously for 3 seconds to switch between 50Hz and 60Hz frequency. During charging, the output frequency synchronizes to and remains aligned with the grid frequency.

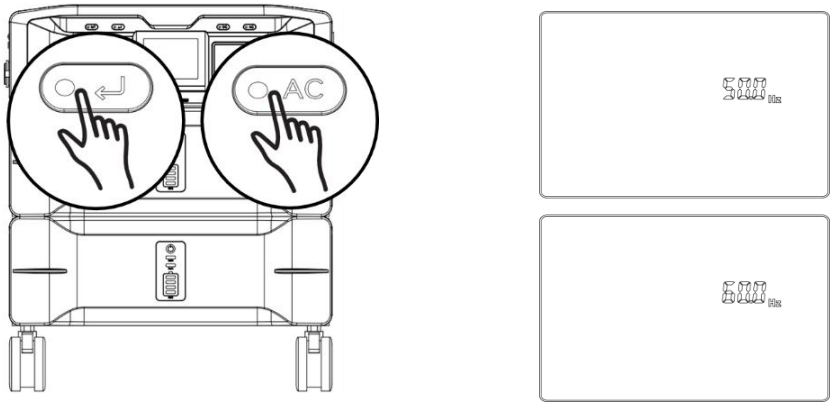

⑦ Press and hold the ‘DC ON/OFF Switch’ to view the software version number and start the fan self-test.

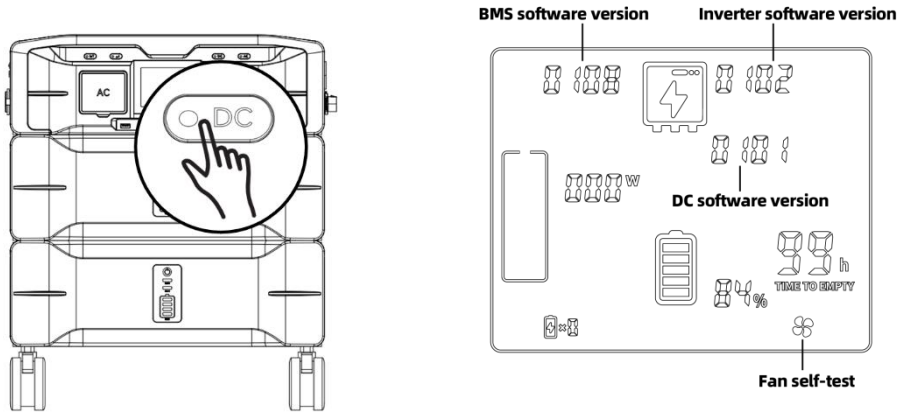

⑧ Double-click five-time the ‘AC ON/OFF Switch’ to change the AC output voltage.

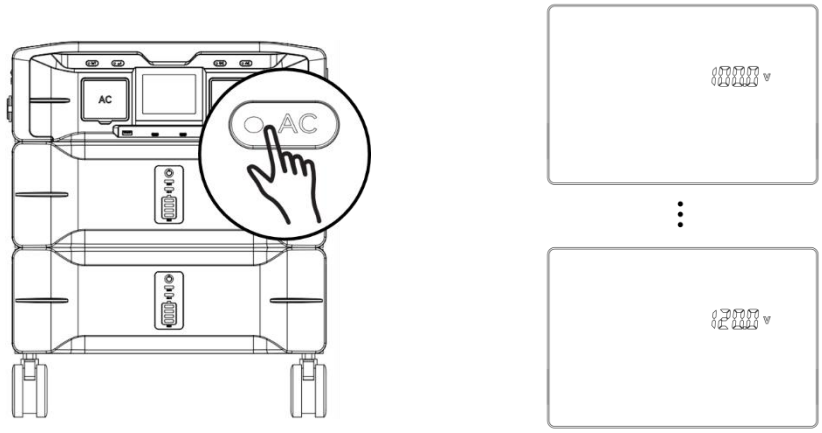

⑨ Click the ‘AC ON/OFF Switch’ to turn ON/OFF the constant power mode.

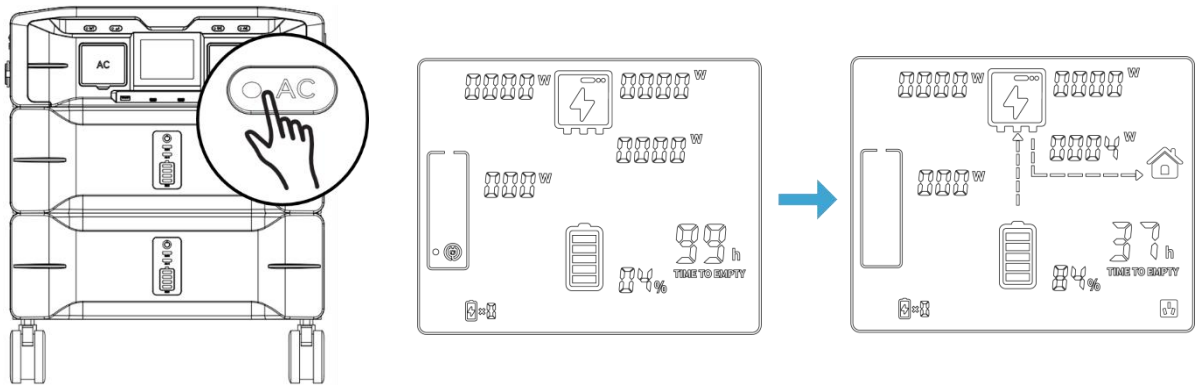

⑩ Press and hold the ‘DC ON/OFF Switch’ and ‘Display Mode Button’ simultaneously for 3 seconds to switch between the XT60 port's discharge mode (Voltage Levels: 12V/24V/36V) and DC charging mode.

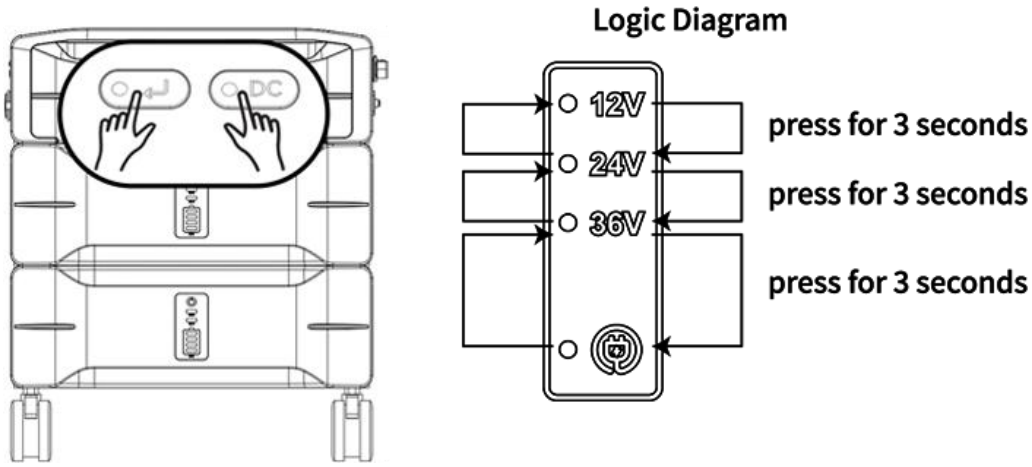

5.3 Charging Instructions

The SP5000 is compatible with both 120V and 240V charging using the provided AC charging cables. When using the 240V AC charging cable, the unit supports a 3450W fast charging. When using the 120V AC charging cable, the unit supports a 1800W standard charging.

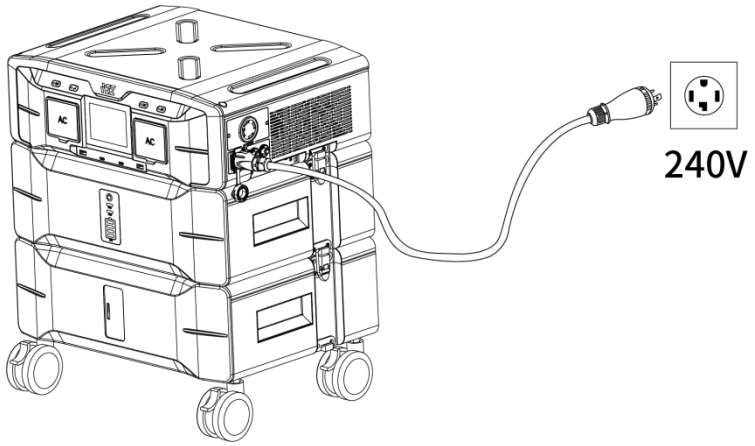

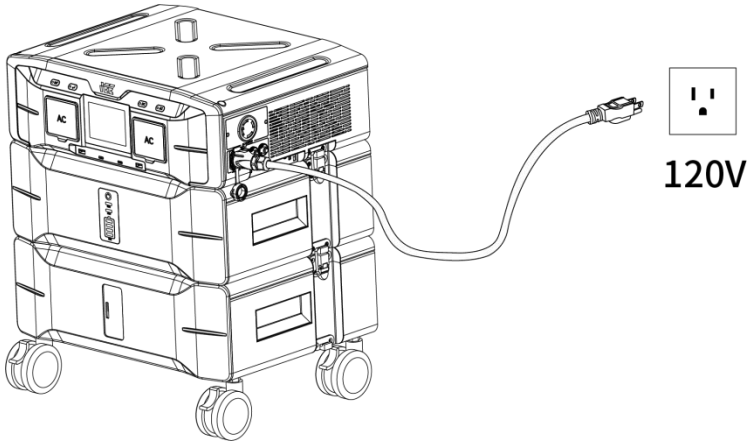

6 Failure and Maintenance

If the following issues occur, refer to the solutions below. If unresolved, please contact your local distributor. The table provides common operational scenarios with recommended troubleshooting steps.

6.1 Failure Display and Troubleshooting

Fault name	Description	Troubleshooting
TIME TO EMPTY	Remaining Discharge Time	
TIME TO FULL	Remaining Charge Time	
TIME TO EMPTY	Battery discharge - high temperature warning (blink)	Place the device in a cool area until the high temperature icon disappears.
TIME TO EMPTY	Battery discharge - low temperature warning (blink)	Place the device in a warm area until the low temperature icon disappears.
TIME TO FULL	Battery charging - high temperature warning (blink)	Place the device in a cool area until the high temperature icon disappears.
TIME TO FULL	Battery charging - low temperature warning (blink)	Place the device in a warm area until the low temperature icon disappears.
	AC input over/undervoltage or over/under-frequency (blink)	Verify that the grid input voltage and frequency are within the device's specified range. If confirmed and fault still exists, return the device for after-sales service.
Over load	AC output overload (blink)	Unplug the load and restart AC output. if the fault still exists, return the device for after-sales repair.
Over load	Type-C/USB output overload (blink)	Unplug the load and restart the device. if the fault still exists, return the device for after-sales repair.
	Fan failure (blink)	Verify that the fan is functioning correctly.
F01	Inverter BUS soft start fault	Restart the device. if the fault still exists, return the device for after-sales repair.
F02	Inverter output short circuit fault	Unplug the load and restart the device. if the fault still exists, return the device for after-sales repair.
F03	Inverter BUS under voltage fault	Restart the device, if the fault still exists, please contact the distributor.

F04	Inverter BUS over voltage fault	Restart the device, if the fault still exists, please contact the distributor.
F05	Inverter BUS short circuit fault	Restart the device, if the fault still exists, please contact the distributor.
F06	Inverter output overcurrent fault	Remove the load and restart the device. If the fault persists, return the device for after-sales repair.
F07	Inverter DC component too high fault	Restart the device, if the fault still exists, please contact the distributor.
F08	Inverter over temperature fault	Verify that the inverter's operating environment temperature is within the specified range.
F09	Inverter discharge over current fault	Restart the device, if the fault still exists, please contact the distributor.
F10	Inverter charging over current fault	Restart the device, if the fault still exists, please contact the distributor.
F11	Inverter current sensor fault	Restart the device, if the fault still exists, please contact the distributor.
F12	Inverter output overvoltage, undervoltage, or over-frequency fault	Check whether the power grid voltage and frequency are within the working range of the device.
F13	AC load short-circuit	Unplug the load and restart the device. if the fault still exists, return the device for after-sales repair.
F14	Inverter main relay fault	Restart the device, if the fault still exists, please contact the distributor.
F15	Inverter fan fault	Restart the device, if the fault still exists, please contact the distributor.
F16	Communication failure between DC module and AC module	Restart the device, if the fault still exists, please contact the distributor.
F17	Communication failure between BMS module and DC module	Restart the device, if the fault still exists, please contact the distributor.

6.2 Maintenance

Maintenance item	Maintenance cycle
Clean housing and output ports (including DC output/AC socket/USB output port) with a clean dust-free cloth.	Three months
The battery should be fully discharged and charged for one cycle.	Three months

7 Specification

Model	SP5000
Battery Input	
Cell Type	$LiFePO_4$
Battery Capacity (Wh)	5120
Battery Input Nominal Voltage (V)	51.2
Battery Input Voltage Range (V)	40~60
Max. Charging Current (A)	80
Max. Discharging Current (A)	100
Life Cycles(@25℃, 0.5C Discharge, DOD80%)	4000+
AC Input (Split Phase, L1-L2-N)	
AC Charging Power (W)	3450
Nominal Voltage (Vac)	240
Voltage Range (Vac)	180~260
Nominal Frequency (Hz)	60
Max. AC Input Current (A)	16
Power Factor (@Max. Charging Power)	>0.99
AC Input (Single Phase, L1-N)	
AC Charging Power (W)	1800
Nominal Voltage (Vac)	120
Voltage Range (Vac)	90~130
Nominal Frequency (Hz)	60
Max. AC Input Current (A)	16
Power Factor (@Max. Charging Power)	>0.99
AC Output (Split Phase, L1-L2-N)	
Nominal AC Power (W)	5000
Surge Power (W)	9000
Nominal Grid Voltage (Vac)	240
Nominal Grid Frequency (Hz)	60
Max. AC Current (A)	21
THDv at Nominal Power (%)	<1.5
AC Output (Split Phase, L1-N / L2-N)	
Nominal AC Power (W)	2500
Surge Power (W)	4500
Nominal Grid Voltage (Vac)	120
Nominal Grid Frequency (Hz)	60
Max. AC Current (A)	21
THDv at Nominal Power (%)	<1.5

Model	SP5000
DC Input (XT90)	
Max. Input Power (W)	1000
Input Voltage Range (V)	12~80
Max. Input Current (A)	16
DC Output	
USB-A (QC) (×2)	5V/3A, 9V/2A, 12V/1.5A
USB-TypeC (×2)	5V/3A, 9V/3A, 12V/3A, 20V/5A
Car Port (×1)	12V/10A
XT90 (×1)	12V/30A, 24V/25A, 36V/20A
Efficiency	
Battery To AC, Max Efficiency (%)	93.0
AC To Battery, Max Efficiency (%)	92.0
Protection	AC output over current; AC output short circuit; AC charging over current; AC output over/under voltage; AC output over/under frequency; Inverter over temperature; AC charging over/under voltage; Battery temperature high/low; Battery over/under voltage
General Data	
Dimensions (W/H/D) (mm)	450*538*352 (Inverter: 450*143*352; Battery: 450*152*352)
Weight (Kg)	65.2 (Inverter: 10.7; Battery1: 26.7; Battery2: 26.7)
LCD (mm)	80*64
Cooling Concept	Forced Air Cooling
Operating Temperature Range (℃)	0~40℃(charging), -20~+40℃(discharging)
Operating Relative Humidity (%)	10-90%
Ingress Protection	IP20
Noise(dB)	<65
Communication Interface	Wi-Fi / Bluetooth

Model	B2560
Battery Input	
Cell Type Cell Type	$LiFePO_4$
Battery Capacity (Wh)	2560
Life Cycles(@25 ℃, 0.5C Discharge, DOD80%)	4000+
General Data	
Dimensions (W/H/D) (mm)	450*152*352
Weight (Kg)	26.7
Operating Temperature Range (℃)	0~40℃(charging), -20~+40℃(discharging)
Operating Relative Humidity (%)	0~95%, Non condensation

FCC Statement

This equipment has been tested and found to comply with the limits for a Class B digital device, pursuant to part 15 of the FCC Rules. These limits are designed to provide reasonable protection against harmful interference in a residential installation. This equipment generates, uses and can radiate radio frequency energy and, if not installed and used in accordance with the instructions, may cause harmful interference to radio communications. However, there is no guarantee that interference will not occur in a particular installation. If this equipment does cause harmful interference to radio or television reception, which can be determined by turning the equipment off and on, the user is encouraged to try to correct the interference by one or more of the following measures:

•Reorient or relocate the receiving antenna.
•Increase the separation between the equipment and receiver.
•Connect the equipment into an outlet on a circuit different from that to which the receiver is connected.
•Consult the dealer or an experienced radio/TV technician for help.

Caution: Any changes or modifications to this device not explicitly approved by manufacturer could void your authority to operate this equipment.

This device complies with part 15 of the FCC Rules. Operation is subject to the following two conditions: (1) This device may not cause harmful interference, and (2) this device must accept any interference received, including interference that may cause undesired operation.

RF Exposure Information

This equipment complies with FCC radiation exposure limits set forth for an uncontrolled environment. This equipment should be installed and operated with minimum distance 20cm between the radiator and your body.