TEST REPORT
FCC ID:2BK5W-YMP-A1

Report Number.....:	**ZKT-240913L11618E-2**
Date of Test.....	Sep. 07, 2024-Sep. 19, 2024
Date of issue.....:	Sep. 25, 2024
Total number of pages.....	41
Test Result..... :	PASS
Testing Laboratory.....:	**Shenzhen ZKT Technology Co., Ltd.**
Address ..... :	1/F, No. 101, Building B, No. 6, Tangwei Community Industrial Avenue, Fuhai Street, Bao'an District, Shenzhen, China
Applicant's name .....:	**Shenzhen Huiran Technology Co., Ltd**
Address ..... :	Room 403, Block C, Zhantao Building, Minzhi Avenue Longhua New District, Shenzhen
Manufacturer's name .....:	**Shenzhen Huiran Technology Co., Ltd**
Address ..... :	Room 403, Block C, Zhantao Building, Minzhi Avenue Longhua New District, Shenzhen
Test specification:	
Standard.....:	FCC CFR Title 47 Part 15 Subpart C Section 15.247 ANSI C63.10:2013
Test procedure..... :	/
Non-standard test method .....:	N/A
Test Report Form No..... :	TRF-EL-110_V0
Test Report Form(s) Originator..... :	ZKT Testing
Master TRF .....:	Dated: 2020-01-06

This device described above has been tested by ZKT, and the test results show that the equipment under test (EUT) is in compliance with the FCC requirements. And it is applicable only to the tested sample identified in the report.
This report shall not be reproduced except in full, without the written approval of ZKT, this document may be altered or revised by ZKT, personal only, and shall be noted in the revision of the document.

Product name.....:	MP4 Player
Trademark .....:	YFFIZQ
Model/Type reference..... :	YMP-A1, YMP-A2, YMP-A3, YMP-A4, YMP-A5, YMP-M1, YMP-M2, YMP-M3, YMP-M5, YMP-M7, YMP-M9, CRP-Z1, CRP-Z2, CRP-Z3, CRP.Z4, CRP-Z5, CRP-W1, CRP-W5, CRP-W7, CRP-W9, CRP-W10, YMP-F1, YMP-F2, YMP-F3, YMP-F4, YMP-F5, YMP-H1, YMP-H2, YMP-H3, YMP-H4, YMP-H5, M8, M9-TP-01, M9-TP-02, M9-TP-03, M9-TP-04, M9-TP-05, M9-LT01, M9-LT-02, M9-LT-03, M9-LT-04, M9-LT-05, TWR-01, TWR-02, TWR-03, TWR-04, TWR-05, YSF-S1, YSF-S2
Ratings..... :	DC 5V form Adapter input AC 120V/60Hz or Battery 3.7V

Testing procedure and testing location:

Testing Laboratory.....:	**Shenzhen ZKT Technology Co., Ltd.**
Address.....:	1/F, No. 101, Building B, No. 6, Tangwei Community Industrial Avenue, Fuhai Street, Bao'an District, Shenzhen, China
Tested by (name + signature).....:	Jim Liu
Reviewer (name + signature).....:	Jackson Fang
Approved (name + signature).....:	Lake Xie

Table of Contents

Page

1. VERSION 5
2. SUMMARY OF TEST RESULTS 6
2.1 TEST FACILITY 7
2.2 MEASUREMENT UNCERTAINTY 7
3. GENERAL INFORMATION 8
3.1 GENERAL DESCRIPTION OF EUT 8
3.2 DESCRIPTION OF TEST MODES 9
3.3 BLOCK DIGRAM SHOWING THE CONFIGURATION OF SYSTEM TESTED 10
3.4 DESCRIPTION OF SUPPORT UNITS(CONDUCTED MODE) 10
3.5EQUIPMENTS LIST FOR ALL TEST ITEMS 11
4. EMC EMISSION TEST 13
4.1 CONDUCTED EMISSION MEASUREMENT 13
4.1.1 POWER LINE CONDUCTED EMISSION Limits 13
4.1.2 TEST PROCEDURE 13
4.1.3 DEVIATION FROM TEST STANDARD 13
4.1.4 TEST SETUP 14
4.1.5 EUT OPERATING CONDITIONS 14
4.1.6 TEST RESULT 15
4.2 RADIATED EMISSION MEASUREMENT 17
4.2.1 RADIATED EMISSION LIMITS 17
4.2.2 TEST PROCEDURE 17
4.2.3 DEVIATION FROM TEST STANDARD 18
4.2.4 TEST SETUP 18
4.2.5 EUT OPERATING CONDITIONS 19
4.2.6 TEST RESULTS 19
5.RADIATED BAND EMISSIONMEASUREMENT 30
5.1 TEST REQUIREMENT: 30
5.2 TEST PROCEDURE 30
5.3 DEVIATION FROM TEST STANDARD 30
5.4 TEST SETUP 31
5.5 EUT OPERATING CONDITIONS 31
5.6 TEST RESULT 32
6.POWER SPECTRAL DENSITY TEST 34
6.1 APPLIED PROCEDURES / LIMIT 34
6.2 TEST PROCEDURE 34
6.3 DEVIATION FROM STANDARD 34
6.4 TEST SETUP 34
6.5 EUT OPERATION CONDITIONS 34

6.6 TEST RESULT 35
7. -6 BANDWIDTH& 99% OCCUPY BANDWIDTH 36
7.1 APPLIED PROCEDURES / LIMIT 36
7.2 TEST PROCEDURE 36
7.3 DEVIATION FROM STANDARD 36
7.4 TEST SETUP 36
7.5 EUT OPERATION CONDITIONS 36
7.6 TEST RESULT 37
8.PEAK OUTPUT POWER TEST 38
8.1 APPLIED PROCEDURES/LIMIT 38
8.2 TEST PROCEDURE 38
8.3 DEVIATION FROM STANDARD 38
8.4 TEST SETUP 38
8.5 EUT OPERATION CONDITIONS 38
8.6 TEST RESULT 38
9. CONDUCTED BAND EDGE AND SPURIOUS EMISSION 39
9.1 APPLICABLE STANDARD 39
9.2 TEST PROCEDURE 39
9.3 DEVIATION FROM STANDARD 39
9.4 TEST SETUP 39
9.5 EUT OPERATION CONDITIONS 39
9.6 TEST RESULTS 39
10. ANTENNA REQUIREMENT 40
11. TEST SETUP PHOTO 41
12. EUT CONSTRUCTIONAL DETAILS 41

1. VERSION

ReportNo.	Version	Description	Approved
ZKT-240913L11618E-2	Rev.01	Initial issue of report	Sep. 25, 2024

2. SUMMARY OF TEST RESULTS

Test procedures according to the technical standards:

FCC Part15 (15.247) , Subpart C			
Standard Section	Test Item	Result	Remark
FCC part 15.203/15.247 (c)	Antenna requirement	PASS	
FCC part 15.207	AC Power Line Conducted Emission	PASS	
FCC part 15.247 (b)(3)	Conducted Peak Output Power	PASS	
FCC part 15.247 (a)(2)	-6dB Bandwidth& 99% OCB	PASS	
FCC part 15.247 (e)	Power Spectral Density	PASS	
FCC part 15.247(d)	Band Edge	PASS	
FCC part 15.205/15.209	Spurious Emission	PASS	

NOTE:

(1)" N/A" denotes test is not applicable in this Test Report

2.1 TEST FACILITY

Shenzhen ZKT Technology Co., Ltd.
Add. : 1/F, No. 101, Building B, No. 6, Tangwei Community Industrial Avenue, Fuhai Street, Bao'an District, Shenzhen, China

FCC Test Firm Registration Number: 692225
Designation Number: CN1299
IC Registered No.: 27033
CAB identifier: CN0110

2.2 MEASUREMENT UNCERTAINTY

The reported uncertainty of measurement y ± U，where expended uncertainty U is based on a standard uncertainty multiplied by a coverage factor of k=2，providing a level of confidence of approximately 95 %。

No.	Item	Uncertainty
1	3m camber Radiated spurious emission(9KHz-30MHz)	U=4.5dB
2	3m camber Radiated spurious emission(30MHz-1GHz)	U=4.8dB
3	3m chamber Radiated spurious emission(1GHz-6GHz)	U=4.9dB
4	3m chamber Radiated spurious emission(6GHz-40GHz)	U=5.0dB
5	Conducted disturbance	U=3.2dB
6	RF Band Edge	U=1.68dB
7	RF power conducted	U=1.86dB
8	RF conducted Spurious Emission	U=2.2dB
9	RF Occupied Bandwidth	U=1.8dB
10	RF Power Spectral Density	U=1.75dB
11	humidity uncertainty	U=5.3%
12	Temperature uncertainty	U=0.59℃

3. GENERAL INFORMATION

3.1 GENERAL DESCRIPTION OF EUT

Product Name:	MP4 Player
Model No.:	YMP-A1, YMP-A2, YMP-A3, YMP-A4, YMP-A5, YMP-M1, YMP-M2, YMP-M3, YMP-M5, YMP-M7, YMP-M9, CRP-Z1, CRP-Z2, CRP-Z3, CRP.Z4, CRP-Z5, CRP-W1, CRP-W5, CRP-W7, CRP-W9, CRP-W10, YMP-F1, YMP-F2, YMP-F3, YMP-F4, YMP-F5, YMP-H1, YMP-H2, YMP-H3, YMP-H4, YMP-H5, M8, M9-TP-01, M9-TP-02, M9-TP-03, M9-TP-04, M9-TP-05, M9-LT01, M9-LT-02, M9-LT-03, M9-LT-04, M9-LT-05, TWR-01, TWR-02, TWR-03, TWR-04, TWR-05, YSF-S1, YSF-S2
Model difference:	PCB board, circuit, structure and internal of these model(s) are the same, Only model number is different for these model.
Hardware Version:	V2
Software Version:	V1.0
Test sample(s) ID:	ZKT-240913L11618E
Channel numbers:	802.11b/802.11g /802.11n(HT20):11 802.11n(HT40):7
Channel separation:	5MHz
Modulation technology:	802.11b: Direct Sequence Spread Spectrum(DSSS) 802.11g/802.11n(H20): Orthogonal Frequency Division Multiplexing(OFDM)
Antenna Type:	FPC antenna
Antenna gain:	0.25 dBi
Power supply:	DC 5V form Adapter input AC 120V/60Hz or Battery 3.7V

Operation Frequency each of channel							
Channel	Frequency	Channel	Frequency	Channel	Frequency	Channel	Frequency
1	2412MHz	4	2427MHz	7	2442MHz	10	2457MHz
2	2417MHz	5	2432MHz	8	2447MHz	11	2462MHz
3	2422MHz	6	2437MHz	9	2452MHz		

Note:
In section 15.31(m), regards to the operating frequency range over 10 MHz, the Lowest frequency, the middle frequency, and the highest frequency of channel were selected to perform the test, and the selected channel see below:

Test channel	**Frequency (MHz)**	
	802.11b/802.11g/802.11n(HT20)	802.11n(HT40)
Lowest channel	2412MHz	2422MHz
Middle channel	2437MHz	2437MHz
Highest channel	2462MHz	2452MHz

3.2 DESCRIPTION OF TEST MODES

Transmitting mode	Keep the EUT in continuously transmitting mode
Remark: During the test,the dutycycle >98%, the test voltage was tuned from 85% to 115% of the nominal rated supply voltage, and found that the worst case was under the nominal rated supply condition. So the report just shows that condition's data.	

Operating mode	
Test mode 1	MP4 playing
Test mode 2	2.4G WIFI
Test mode 3	PC data transmitting

We have verified the construction and function in typical operation. All the test modes were carried out with the EUT in transmitting operation, which was shown in this test report and defined as follows:

Pre-scan all kind of data rate in lowest channel, and found the follow list which it was worst case.

802.11b	802.11g	802.11n(HT20)	802.11n(HT40)
1Mbps	6Mbps	65Mbps	135Mbps

Test Software	Realtek Test Tool
Powerlevelsetup	Default

3.3 BLOCK DIGRAM SHOWING THE CONFIGURATION OF SYSTEM TESTED

Conducted Emission

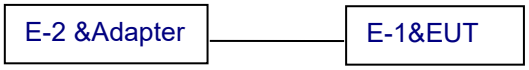

Radiated Emission

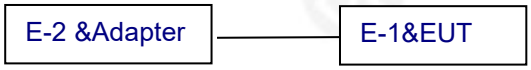

Conducted Spurious

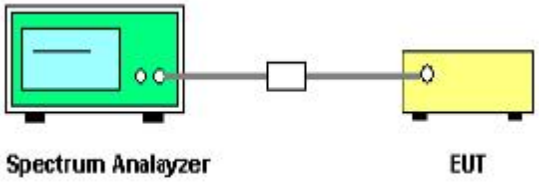

3.4 DESCRIPTION OF SUPPORT UNITS(CONDUCTED MODE)

The EUT has been tested as an independent unit together with other necessary accessories or support units. The following support units or accessories were used to form a representative test configuration during the tests.

Item	Equipment	Mfr/Brand	Model/Type No.	Series No.	Note
E-1	MP4 Player	YFFIZQ	YMP-A1	N/A	EUT
E-2	Power adapter	N/A	N/A	N/A	AE

Item	Shielded Type	Ferrite Core	Length	Note

Note:

(1) The support equipment was authorized by Declaration of Confirmation.
(2) For detachable type I/O cable should be specified the length in cm in 『Length』 column.

3.5EQUIPMENTS LIST FOR ALL TEST ITEMS

Radiation Test equipment

Item	Equipment	Manufacturer	Type No.	Serial No.	Firmware Version	Last calibration	Calibrated until
1	Spectrum Analyzer (9kHz-26.5GHz)	KEYSIGHT	9020A	MY55370835	A.17.05	Nov. 02, 2023	Nov. 01, 2024
2	Spectrum Analyzer (10kHz-39.9GHz)	R&S	FSV40-N	100363	1.71 SP2	Nov. 02, 2023	Nov. 01, 2024
3	EMI Test Receiver (9kHz-7GHz)	R&S	ESCI7	100969	4.32	Nov. 02, 2023	Nov. 01, 2024
4	Bilog Antenna (30MHz-1500MHz)	Schwarzbeck	VULB9168	N/A	N/A	Nov. 13, 2023	Nov. 12, 2024
5	Horn Antenna (1GHz-18GHz)	Agilent	AH-118	071145	N/A	Nov. 13, 2023	Nov. 12, 2024
6	Horn Antenna (15GHz-40GHz)	A.H.System	SAS-574	588	N/A	Nov. 13, 2023	Nov. 12, 2024
7	Loop Antenna	TESEQ	HLA6121	58357	N/A	Nov. 16, 2023	Nov. 15, 2024
8	Amplifier (30-1000MHz)	EM Electronics	EM330 Amplifier	60747	N/A	Nov. 02, 2023	Nov. 01, 2024
9	Amplifier (1GHz-26.5GHz)	HuiPu	8449B	3008A00315	N/A	Nov. 02, 2023	Nov. 01, 2024
10	Amplifier (500MHz-40GHz)	QuanJuDa	DLE-161	097	N/A	Nov. 02, 2023	Nov. 01, 2024
11	Test Cable	N/A	R-01	N/A	N/A	Nov. 02, 2023	Nov. 01, 2024
12	Test Cable	N/A	R-02	N/A	N/A	Nov. 02, 2023	Nov. 01, 2024
13	Test Cable	N/A	R-03	N/A	N/A	Nov. 02, 2023	Nov. 01, 2024
14	Test Cable	N/A	RF-01	N/A	N/A	Nov. 02, 2023	Nov. 01, 2024
15	Test Cable	N/A	RF-02	N/A	N/A	Nov. 02, 2023	Nov. 01, 2024
16	Test Cable	N/A	RF-03	N/A	N/A	Nov. 02, 2023	Nov. 01, 2024
17	ESG Signal Generator	Agilent	E4421B	N/A	B.03.84	Nov. 02, 2023	Nov. 01, 2024
18	Signal Generator	Agilent	N5182A	N/A	A.01.87	Nov. 02, 2023	Nov. 01, 2024
19	Magnetic Field Probe Tester	Narda	ELT-400	0-0344	N/A	Nov. 16, 2023	Nov. 15, 2024
20	Wideband Radio Communication Test	R&S	CMW500	106504	V 3.7.22	Nov. 02, 2023	Nov. 01, 2024
21	MWRF Power Meter Test system	MW	MW100-RF CB	N/A	N/A	Nov. 02, 2023	Nov. 01, 2024
22	D.C. Power Supply	LongWei	TPR-6405D	N/A	N/A	\	\
23	EMC Software	Frad	EZ-EMC	Ver.EMC-CO N 3A1.1	N/A	\	\
24	RF Software	MW	MTS8310	V2.0.0.0	N/A	\	\
25	Turntable	MF	MF-7802BS	N/A	N/A	\	\
26	Antenna tower	MF	MF-7802BS	N/A	N/A	\	\

Conduction Test equipment

Item	Kind of Equipment	Manufacturer	Type No.	Serial No.	Firmware Version	Last calibration	Calibrated until
1	LISN	R&S	ENV216	101471	N/A	Nov. 14, 2023	Nov. 13, 2024
2	LISN	CYBERTEK	EM5040A	E1850400149	N/A	Nov. 02, 2023	Nov. 01, 2024
3	Test Cable	N/A	C-01	N/A	N/A	Nov. 02, 2023	Nov. 01, 2024
4	Test Cable	N/A	C-02	N/A	N/A	Nov. 02, 2023	Nov. 01, 2024
5	Test Cable	N/A	C-03	N/A	N/A	Nov. 02, 2023	Nov. 01, 2024
6	EMI Test Receiver	R&S	ESCI3	101393	4.42 SP3	Nov. 02, 2023	Nov. 01, 2024
7	Triple-Loop Antenna	N/A	RF300	N/A	N/A	Nov. 02, 2023	Nov. 01, 2024
8	Absorbing Clamp	DZ	ZN23201	15034	N/A	Nov. 07, 2023	Nov. 06, 2024
9	EMC Software	Frad	EZ-EMC	Ver.EMC-CON 3A1.1	N/A	\	\

4. EMC EMISSION TEST

4.1 CONDUCTED EMISSION MEASUREMENT

Test Requirement:	FCC Part15 C Section 15.207
Test Method:	ANSI C63.10:2013 & RSS-Gen
Test Frequency Range:	150KHz to 30MHz
Receiver setup:	RBW=9KHz, VBW=30KHz, Sweep time=auto

4.1.1 POWER LINE CONDUCTED EMISSION Limits

FREQUENCY (MHz)	Limit (dBuV)		Standard
	Quasi-peak	Average	
0.15 -0.5	66 - 56 *	56 - 46 *	FCC
0.50 -5.0	56.00	46.00	FCC
5.0 -30.0	60.00	50.00	FCC

Note:

(1) *Decreases with the logarithm of the frequency.

4.1.2 TEST PROCEDURE

a. The EUT was placed 0.1 meters from the horizontal ground plane with EUT being connected to the power mains through a line impedance stabilization network (LISN). All other support equipments powered from additional LISN(s). The LISN provide 50 Ohm/ 50uH of coupling impedance for the measuring instrument.
b. Interconnecting cables that hang closer than 40 cm to the ground plane shall be folded back and forth in the center forming a bundle 30 to 40 cm long.
c. I/O cables that are not connected to a peripheral shall be bundled in the center. The end of the cable may be terminated, if required, using the correct terminating impedance. The overall length shall not exceed 1 m.
d. LISN at least 80 cm from nearest part of EUT chassis.
e. For the actual test configuration, please refer to the related Item –EUT Test Photos.

4.1.3 DEVIATION FROM TEST STANDARD

No deviation

4.1.4 TEST SETUP

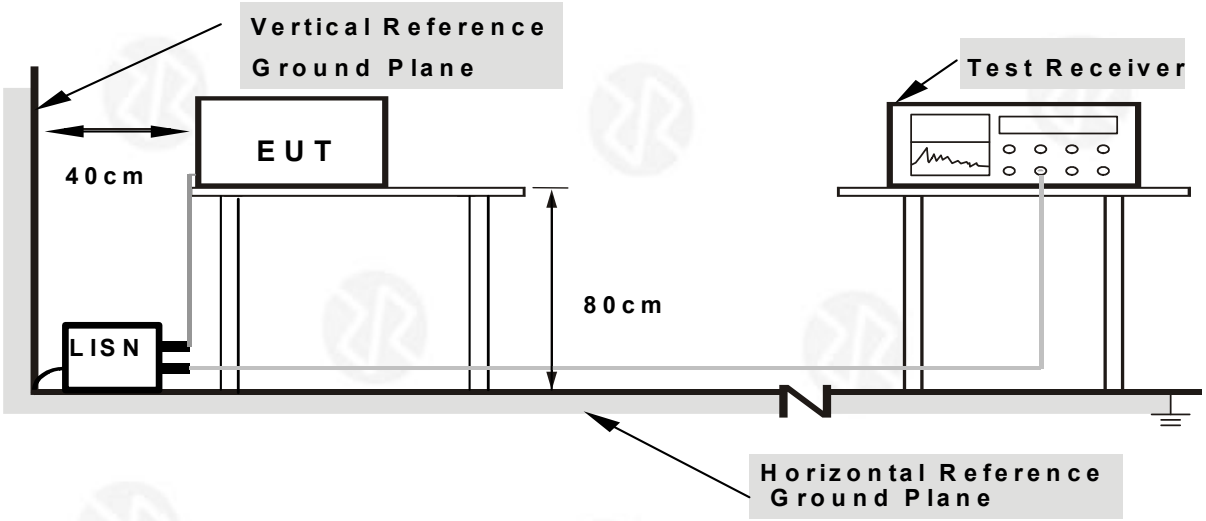

Note: 1.Support units were connected to second LISN.
2.Both of LISNs (AMN) are 80 cm from EUT and at least 80 from other units and other metal planes

4.1.5 EUT OPERATING CONDITIONS

The EUT was configured for testing in a typical fashion (as a customer would normally use it). The EUT has been programmed to continuously transmit during test. This operating condition was tested and used to collect the included data.

We pretest AC 120V and AC 230V, the worst voltage was AC 120V and the data recording in the report.

4.1.6 TEST RESULT

Temperature :	26℃	Relative Humidity:	54%
Pressure :	101kPa	Phase :	L
Test Voltage :	AC 120V/60Hz		

Note: Pre-scan all modes and recorded the worst case results in this report which is 802.11b mode.

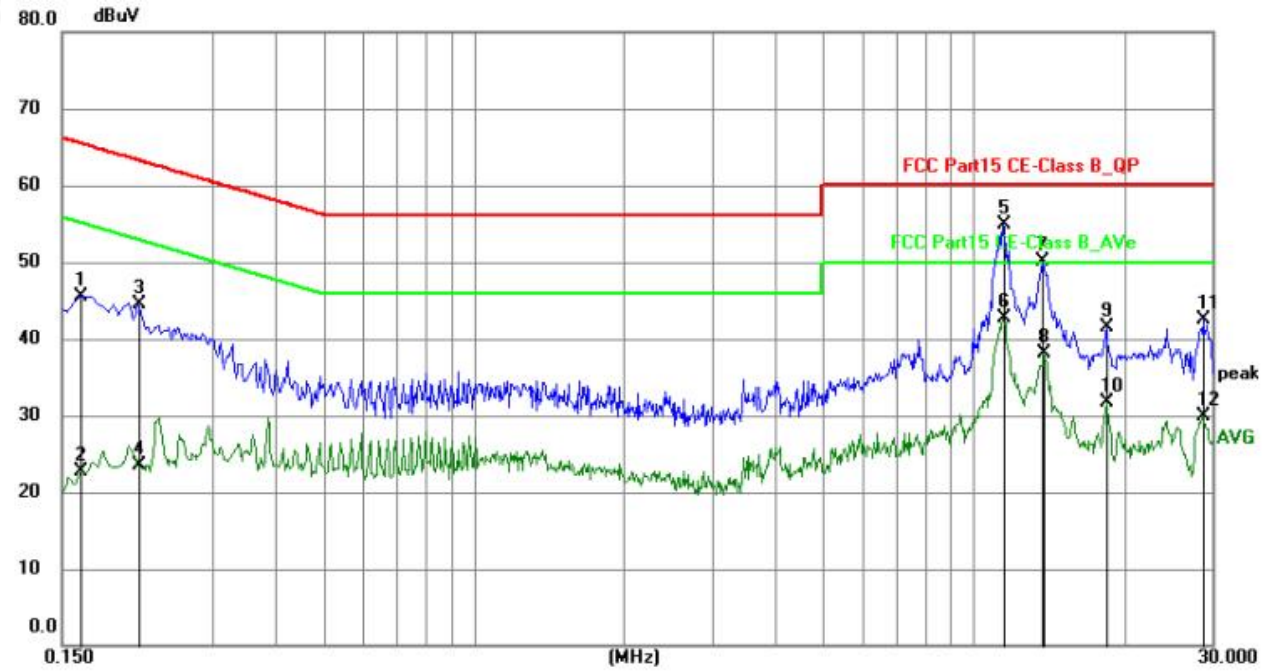

No.	Frequency (MHz)	Reading (dBuV)	Factor (dB)	Level (dBuV)	Limit (dBuV)	Margin (dB)	Detector	P/F
1	0.1640	24.63	20.91	45.54	65.26	-19.72	QP	P
2	0.1640	1.78	20.91	22.69	55.26	-32.57	AVG	P
3	0.2129	23.48	21.03	44.51	63.09	-18.58	QP	P
4	0.2129	2.42	21.03	23.45	53.09	-29.64	AVG	P
5	11.4763	32.53	22.29	54.82	60.00	-5.18	QP	P
6	11.4763	20.44	22.29	42.73	50.00	-7.27	AVG	P
7	13.7128	27.36	22.66	50.02	60.00	-9.98	QP	P
8	13.8073	15.42	22.67	38.09	50.00	-11.91	AVG	P
9	18.5233	17.95	23.46	41.41	60.00	-18.59	QP	P
10	18.5233	8.24	23.46	31.70	50.00	-18.30	AVG	P
11	28.8150	17.46	25.13	42.59	60.00	-17.41	QP	P
12	28.8150	4.73	25.13	29.86	50.00	-20.14	AVG	P

Notes:
1.An initial pre-scan was performed on the line and neutral lines with peak detector.
2.Quasi-Peak and Average measurement were performed at the frequencies with maximized peak emission.
3.Mesurement Level = Reading level + Correct Facto

Temperature :	26℃	Relative Humidity:	54%
Pressure :	101kPa	Phase :	N
Test Voltage :	AC 120V/60Hz		

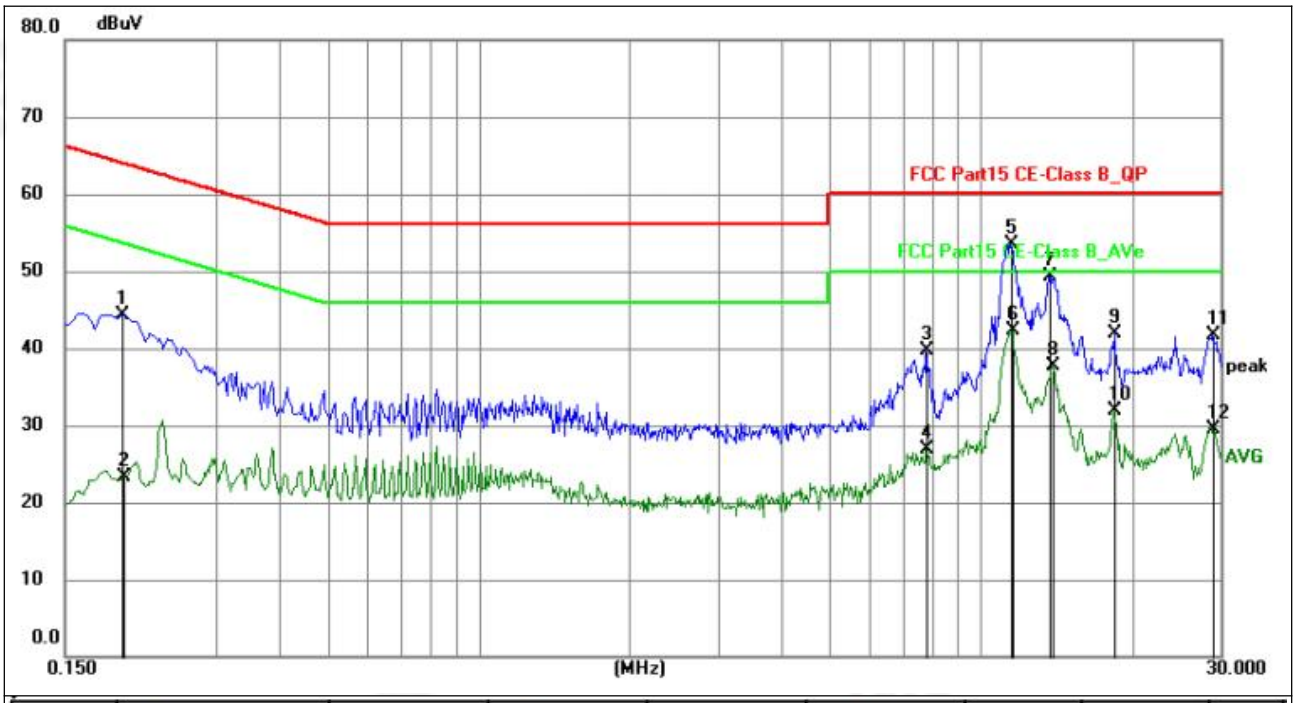

No.	Frequency (MHz)	Reading (dBuV)	Factor (dB)	Level (dBuV)	Limit (dBuV)	Margin (dB)	Detector	P/F
1	0.1949	23.37	20.99	44.36	63.83	-19.47	QP	P
2	0.1965	2.28	20.98	23.26	53.76	-30.50	AVG	P
3	7.8000	18.08	21.69	39.77	60.00	-20.23	QP	P
4	7.8000	5.22	21.69	26.91	50.00	-23.09	AVG	P
5	11.4945	31.22	22.31	53.53	60.00	-6.47	QP	P
6	11.5618	20.07	22.32	42.39	50.00	-7.61	AVG	P
7	13.6950	26.66	22.68	49.34	60.00	-10.66	QP	P
8	13.8523	14.90	22.72	37.62	50.00	-12.38	AVG	P
9	18.4875	18.34	23.51	41.85	60.00	-18.15	QP	P
10	18.4875	8.30	23.51	31.81	50.00	-18.19	AVG	P
11	28.9185	16.50	25.16	41.66	60.00	-18.34	QP	P
12	28.9185	4.44	25.16	29.60	50.00	-20.40	AVG	P

Notes:
1.An initial pre-scan was performed on the line and neutral lines with peak detector.
2.Quasi-Peak and Average measurement were performed at the frequencies with maximized peak emission.
3.Mesurement Level = Reading level + Correct Factor

4.2 RADIATED EMISSION MEASUREMENT

Test Requirement:	FCC Part15 C Section 15.209
Test Method:	ANSI C63.10:2013
Test Frequency Range:	9kHz to 25GHz
Test site:	Measurement Distance: 3m
Receiver setup:	

Frequency	Detector	RBW	VBW	Value
9KHz-150KHz	Quasi-peak	200Hz	600Hz	Quasi-peak
150KHz-30MHz	Quasi-peak	9KHz	30KHz	Quasi-peak
30MHz-1GHz	Quasi-peak	100KHz	300KHz	Quasi-peak
Above 1GHz	Peak	1MHz	3MHz	Peak
	Peak	1MHz	10Hz	Average

4.2.1 RADIATED EMISSION LIMITS

Frequencies (MHz)	Field Strength (micorvolts/meter)	Measurement Distance (meters)
0.009~0.490	2400/F(KHz)	300
0.490~1.705	24000/F(KHz)	30
1.705~30.0	30	30
30~88	100	3
88~216	150	3
216~960	200	3
Above 960	500	3

LIMITS OF RADIATED EMISSION MEASUREMENT

FREQUENCY (MHz)	Limit (dBuV/m) (at 3M)	
	PEAK	AVERAGE
Above 1000	74	54

Notes:

(1) The limit for radiated test was performed according to FCC PART 15C.

(2) The tighter limit applies at the band edges.

(3) Emission level (dBuV/m)=20log Emission level (uV/m).

4.2.2 TEST PROCEDURE

Below 1GHz test procedure as below:

a. The EUT was placed on the top of a rotating table 0.1 meters above the ground at a 3 meter semi-anechoiccamber. The table was rotated 360 degrees to determine the position of the highest radiation.

b. The EUT was set 3 meters away from the interference-receiving antenna, which was mounted on the top of avariable-height antenna tower.

c. The antenna height is varied from one meter to four meters above the ground to determine the maximum valueof the field strength. Both horizontal and vertical polarizations of the antenna are set to make the measurement.
d. For each suspected emission, the EUT was arranged to its worst case and then the antenna was tuned toheights from 1 meter to 4 meters (for the test frequency of below 30MHz, the antenna was tuned to heights 1meter) and the rotatable table was turned from 0 degrees to 360 degrees to find the maximum reading.
e. The test-receiver system was set to Peak Detect Function and Specified Bandwidth with Maximum Hold Mode.
f. If the emission level of the EUT in peak mode was 10dB lower than the limit specified, then testing could bestopped and the peak values of the EUT would be reported. Otherwise the emissions that did not have 10dBmargin would be re-tested one by one using peak, quasi-peak or average method as specified and then reportedin a data sheet.

Above 1GHz test procedure as below:

g. Different between above is the test site, change from Semi- Anechoic Chamber to fully Anechoic Chamber andchange form table 0.8 meter to 1.5 meter(Above 18GHz the distance is 1 meter and table is 1.5 meter).
h. Test the EUT in the lowest channel ,the middle channel ,the Highest channel

Note:

Both horizontal and vertical antenna polarities were tested
and performed pretest to three orthogonal axis. The worst case emissions were reported

4.2.3 DEVIATION FROM TEST STANDARD

No deviation

4.2.4 TEST SETUP

（A）Radiated Emission Test-Up Frequency Below 30MHz

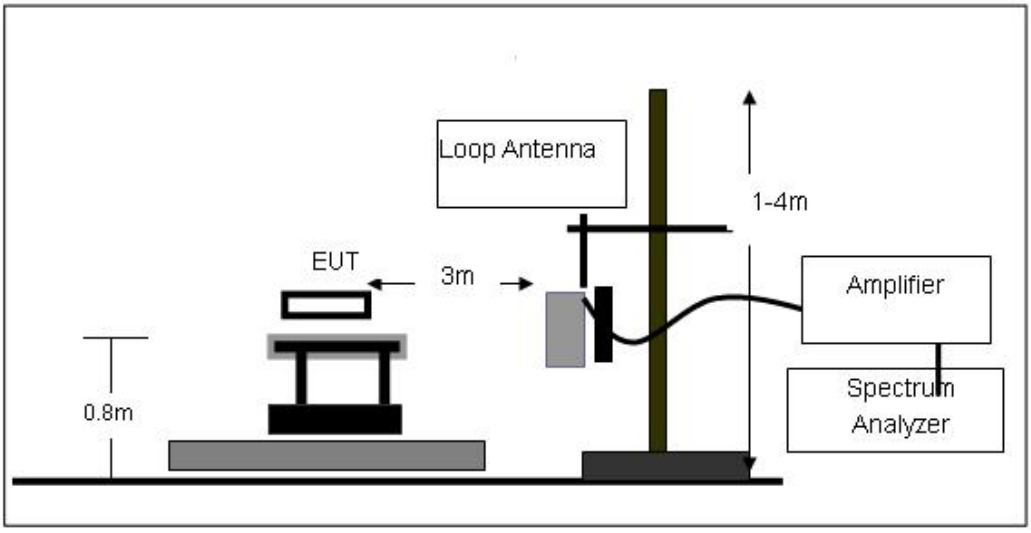

（B）Radiated Emission Test-Up Frequency 30MHz~1GHz

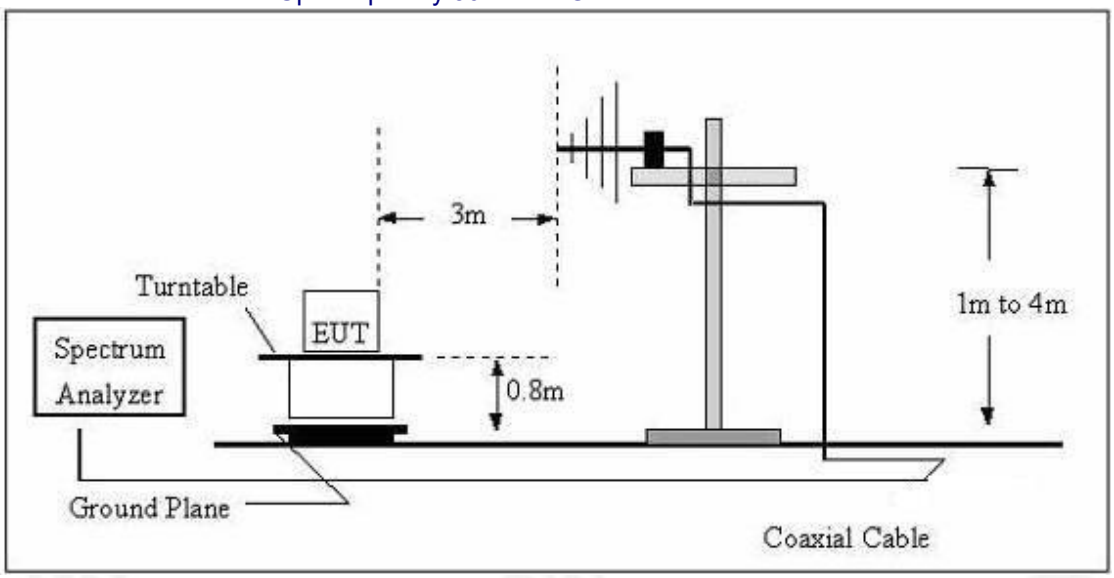

（C）Radiated Emission Test-Up Frequency Above 1GHz

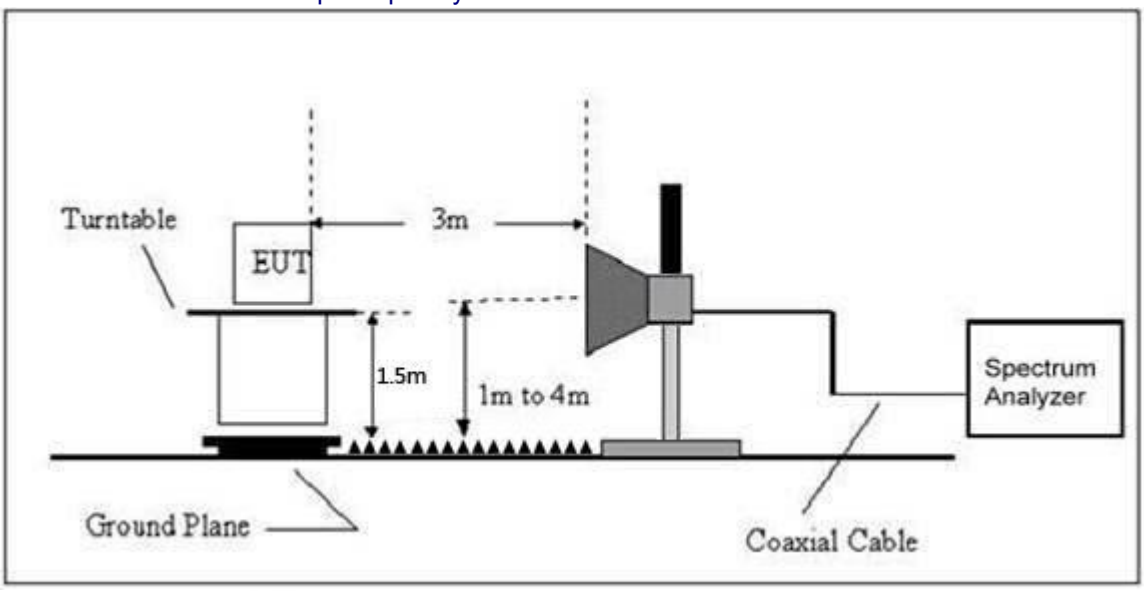

4.2.5 EUT OPERATING CONDITIONS

The EUT tested system was configured as the statements of 2.4 Unless otherwise a special operating condition is specified in the follows during the testing.

4.2.6 TEST RESULTS

Between 9KHz – 30MHz

The emission from 9 kHz to 30MHz was pre-tested and found the result was 20dB lower than the limit, and according to 15.31(o) & RSS-Gen 6.13, the test result no need to reported.

Between 30MHz – 1GHz

Temperature:	26℃	Relative Humidity:	54%
Pressure:	101 kPa	Polarization:	Horizontal
Test Voltage:	AC 120V/60Hz	Test Mode	TX

Note: Pre-scan all modes and recorded the worst case results in this report which is 802.11b mode.

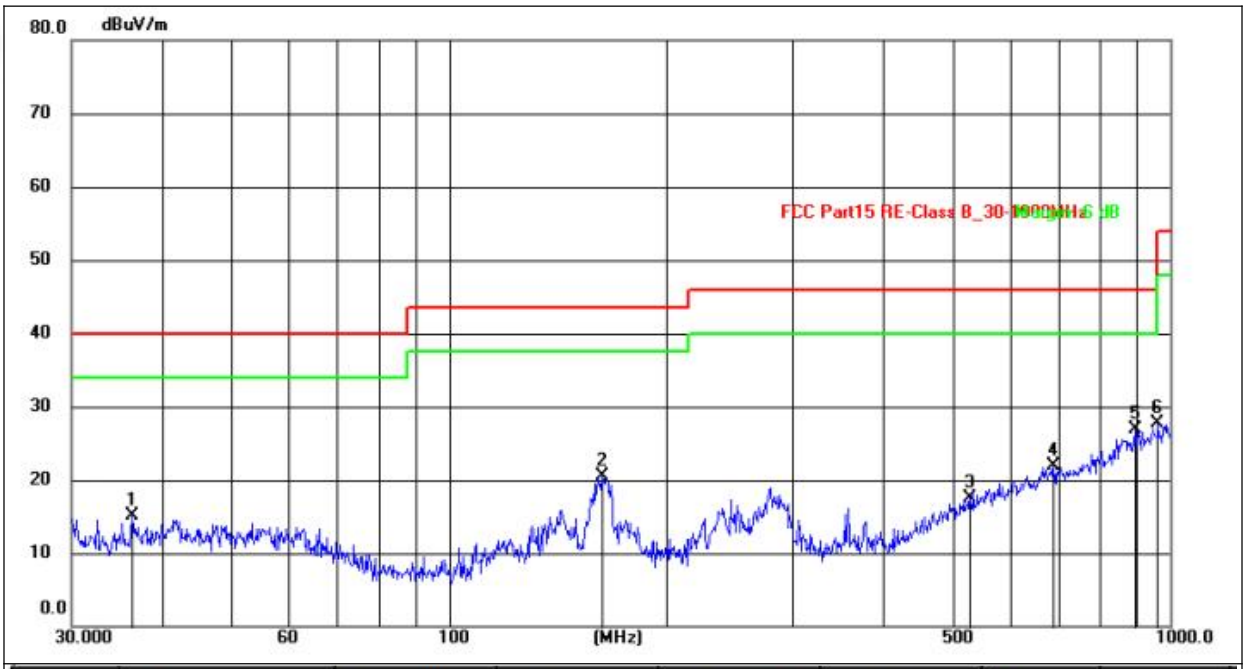

No.	Frequency (MHz)	Reading (dBuV)	Factor (dB/m)	Level (dBuV/m)	Limit (dBuV/m)	Margin (dB)	Detector
1	36.3813	29.90	-14.80	15.10	40.00	-24.90	QP
2	163.1817	37.00	-16.45	20.55	43.50	-22.95	QP
3	528.2458	28.32	-10.83	17.49	46.00	-28.51	QP
4	689.5643	28.75	-6.93	21.82	46.00	-24.18	QP
5	893.8565	33.97	-6.99	26.98	46.00	-19.02	QP
6	962.1621	33.46	-5.67	27.79	54.00	-26.21	QP

Temperature:	26℃	Relative Humidity:	54%
Pressure:	101 kPa	Polarization:	Vertical
Test Voltage:	AC 120V/60Hz	Test Mode	TX

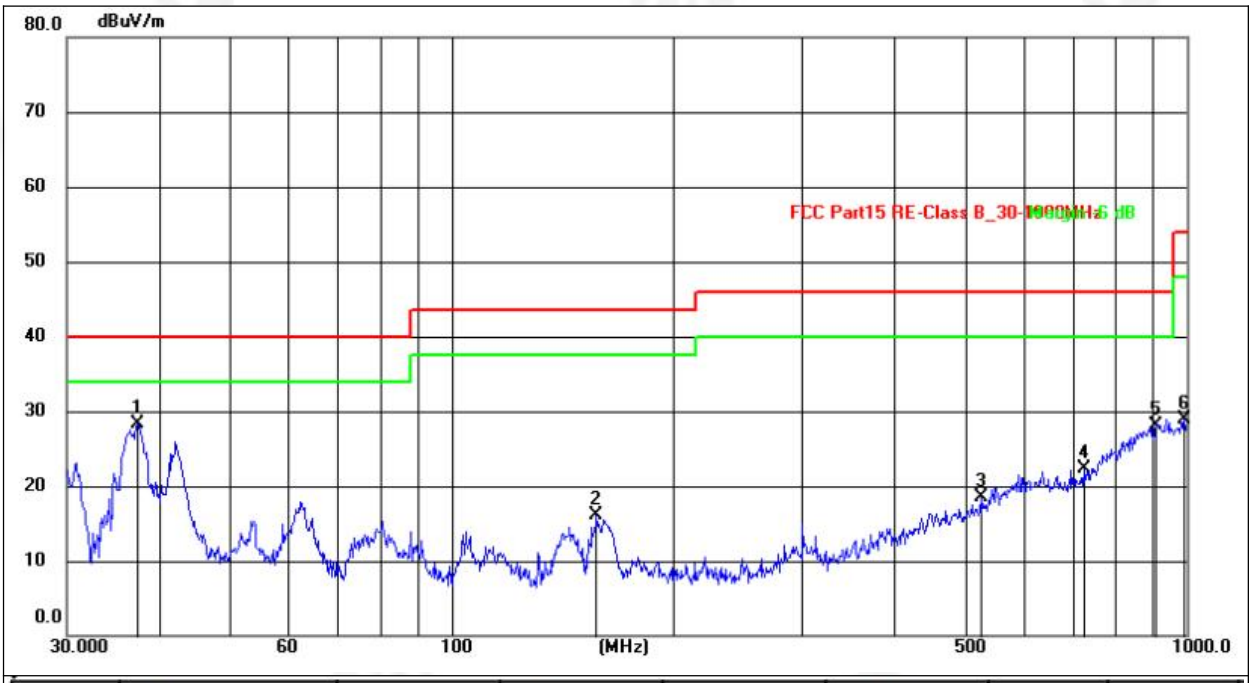

No.	Frequency (MHz)	Reading (dBuV)	Factor (dB/m)	Level (dBuV/m)	Limit (dBuV/m)	Margin (dB)	Detector
1	37.4164	45.46	-17.25	28.21	40.00	-11.79	QP
2	157.5587	36.30	-20.28	16.02	43.50	-27.48	QP
3	524.5540	29.18	-10.63	18.55	46.00	-27.45	QP
4	724.2609	28.90	-6.66	22.24	46.00	-23.76	QP
5	906.4823	28.90	-0.70	28.20	46.00	-17.80	QP
6	993.0113	29.24	-0.26	28.98	54.00	-25.02	QP

Notes:
1. The EUT was test at 3m in field chamber.
2. Final Level =Receiver Read level +Antenna Factor
3. The emission levels of other frequencies are very lower than the limit and not show in test report.

1GHz~25GHz

Polar (H/V)	Frequency (MHz)	Meter Reading (dBuV)	Pre-amplifier (dB)	Cable Loss (dB)	Antenna Factor (dB)	Emission Level (dBuV/m)	Limits (dBuV/m)	Margin (dB)	Detector Type
Low Channel:2412MHz									
V	4824.00	48.71	30.55	5.77	24.66	48.59	74.00	-25.41	PK
V	4824.00	40.59	30.55	5.77	24.66	40.47	54.00	-13.53	AV
V	7236.00	49.52	30.33	6.32	24.55	50.06	74.00	-23.94	PK
V	7236.00	40.59	30.33	6.32	24.55	41.13	54.00	-12.87	AV
V	9648.00	47.79	30.85	7.45	24.69	49.08	74.00	-24.92	PK
V	9648.00	40.89	30.85	7.45	24.69	42.18	54.00	-11.82	AV
V	12060.00	51.91	31.02	8.99	25.57	55.45	74.00	-18.55	PK
V	12060.00	40.45	31.02	8.99	25.57	43.99	54.00	-10.01	AV
H	4824.00	51.9	30.55	5.77	24.66	51.78	74.00	-22.22	PK
H	4824.00	40.32	30.55	5.77	24.66	40.2	54.00	-13.8	AV
H	7236.00	51.84	30.33	6.32	24.55	52.38	74.00	-21.62	PK
H	7236.00	40.7	30.33	6.32	24.55	41.24	54.00	-12.76	AV
H	9648.00	49.95	30.85	7.45	24.69	51.24	74.00	-22.76	PK
H	9648.00	40.61	30.85	7.45	24.69	41.9	54.00	-12.1	AV
H	12060.00	51.45	31.02	8.99	25.57	54.99	74.00	-19.01	PK
H	12060.00	40.68	31.02	8.99	25.57	44.22	54.00	-9.78	AV

802.11b

Polar (H/V)	Frequency (MHz)	Meter Reading (dBuV)	Pre-amplifier (dB)	Cable Loss (dB)	Antenna Factor (dB)	Emission Level (dBuV/m)	Limits (dBuV/m)	Margin (dB)	Detector Type
Middle Channel:2437MHz									
V	4874.00	47.15	30.55	5.77	24.66	47.03	74.00	-26.97	PK
V	4874.00	40.43	30.55	5.77	24.66	40.31	54.00	-13.69	AV
V	7311.00	47.77	30.33	6.32	24.55	48.31	74.00	-25.69	PK
V	7311.00	40.24	30.33	6.32	24.55	40.78	54.00	-13.22	AV
V	9748.00	49.6	30.85	7.45	24.69	50.89	74.00	-23.11	PK
V	9748.00	41.05	30.85	7.45	24.69	42.34	54.00	-11.66	AV
V	12185.00	48.48	31.02	8.99	25.57	52.02	74.00	-21.98	PK
V	12185.00	41.12	31.02	8.99	25.57	44.66	54.00	-9.34	AV
H	4874.00	47.61	30.55	5.77	24.66	47.49	74.00	-26.51	PK
H	4874.00	40.76	30.55	5.77	24.66	40.64	54.00	-13.36	AV
H	7311.00	49.43	30.33	6.32	24.55	49.97	74.00	-24.03	PK
H	7311.00	40.88	30.33	6.32	24.55	41.42	54.00	-12.58	AV
H	9748.00	48.88	30.85	7.45	24.69	50.17	74.00	-23.83	PK
H	9748.00	40.58	30.85	7.45	24.69	41.87	54.00	-12.13	AV
H	12185.00	49.42	31.02	8.99	25.57	52.96	74.00	-21.04	PK
H	12185.00	40.24	31.02	8.99	25.57	43.78	54.00	-10.22	AV

Polar (H/V)	Frequency (MHz)	Meter Reading (dBuV)	Pre-amplifier (dB)	Cable Loss (dB)	Antenna Factor (dB)	Emission Level (dBuV/m)	Limits (dBuV/m)	Margin (dB)	Detector Type
High Channel:2462MHz									
V	4924.00	49.72	30.55	5.77	24.66	49.6	74.00	-24.4	PK
V	4924.00	40.68	30.55	5.77	24.66	40.56	54.00	-13.44	AV
V	7386.00	50.01	30.33	6.32	24.55	50.55	74.00	-23.45	PK
V	7386.00	40.22	30.33	6.32	24.55	40.76	54.00	-13.24	AV
V	9848.00	49.47	30.85	7.45	24.69	50.76	74.00	-23.24	PK
V	9848.00	40.64	30.85	7.45	24.69	41.93	54.00	-12.07	AV
V	12310.00	49.07	31.02	8.99	25.57	52.61	74.00	-21.39	PK
V	12310.00	40.56	31.02	8.99	25.57	44.1	54.00	-9.9	AV
H	4924.00	51.49	30.55	5.77	24.66	51.37	74.00	-22.63	PK
H	4924.00	40.77	30.55	5.77	24.66	40.65	54.00	-13.35	AV
H	7386.00	47.85	30.33	6.32	24.55	48.39	74.00	-25.61	PK
H	7386.00	40.2	30.33	6.32	24.55	40.74	54.00	-13.26	AV
H	9848.00	49.21	30.85	7.45	24.69	50.5	74.00	-23.5	PK
H	9848.00	41.01	30.85	7.45	24.69	42.3	54.00	-11.7	AV
H	12310.00	50.48	31.02	8.99	25.57	54.02	74.00	-19.98	PK
H	12310.00	40.89	31.02	8.99	25.57	44.43	54.00	-9.57	AV

Remark:
1. Emission Level = Meter Reading + Antenna Factor + Cable Loss – Pre-amplifier,
Margin= Emission Level - Limit
2. If peak below the average limit, the average emission was no test.
3. The amplitude of spurious emissions which are attenuated by more than 20dB below the permissible value has no need to be reported.

802.11g

Polar (H/V)	Frequency (MHz)	Meter Reading (dBuV)	Pre-amplifier (dB)	Cable Loss (dB)	Antenna Factor (dB)	Emission Level (dBuV/m)	Limits (dBuV/m)	Margin (dB)	Detector Type
Low Channel:2412MHz									
V	4824.00	50.85	30.55	5.77	24.66	50.73	74.00	-23.27	PK
V	4824.00	41.02	30.55	5.77	24.66	40.9	54.00	-13.1	AV
V	7236.00	48.96	30.33	6.32	24.55	49.5	74.00	-24.5	PK
V	7236.00	41.01	30.33	6.32	24.55	41.55	54.00	-12.45	AV
V	9648.00	49.21	30.85	7.45	24.69	50.5	74.00	-23.5	PK
V	9648.00	40.82	30.85	7.45	24.69	42.11	54.00	-11.89	AV
V	12060.00	51.55	31.02	8.99	25.57	55.09	74.00	-18.91	PK
V	12060.00	40.85	31.02	8.99	25.57	44.39	54.00	-9.61	AV
H	4824.00	49.46	30.55	5.77	24.66	49.34	74.00	-24.66	PK
H	4824.00	41.07	30.55	5.77	24.66	40.95	54.00	-13.05	AV
H	7236.00	47.47	30.33	6.32	24.55	48.01	74.00	-25.99	PK
H	7236.00	40.87	30.33	6.32	24.55	41.41	54.00	-12.59	AV
H	9648.00	49.59	30.85	7.45	24.69	50.88	74.00	-23.12	PK
H	9648.00	40.81	30.85	7.45	24.69	42.1	54.00	-11.9	AV
H	12060.00	51.95	31.02	8.99	25.57	55.49	74.00	-18.51	PK
H	12060.00	40.12	31.02	8.99	25.57	43.66	54.00	-10.34	AV

Polar (H/V)	Frequency (MHz)	Meter Reading (dBuV)	Pre-amplifier (dB)	Cable Loss (dB)	Antenna Factor (dB)	Emission Level (dBuV/m)	Limits (dBuV/m)	Margin (dB)	Detector Type
Middle Channel:2437MHz									
V	4874.00	50.41	30.55	5.77	24.66	50.29	74.00	-23.71	PK
V	4874.00	40.17	30.55	5.77	24.66	40.05	54.00	-13.95	AV
V	7311.00	47.55	30.33	6.32	24.55	48.09	74.00	-25.91	PK
V	7311.00	40.27	30.33	6.32	24.55	40.81	54.00	-13.19	AV
V	9748.00	49.58	30.85	7.45	24.69	50.87	74.00	-23.13	PK
V	9748.00	40.62	30.85	7.45	24.69	41.91	54.00	-12.09	AV
V	12185.00	47.97	31.02	8.99	25.57	51.51	74.00	-22.49	PK
V	12185.00	40.57	31.02	8.99	25.57	44.11	54.00	-9.89	AV
H	4874.00	50.5	30.55	5.77	24.66	50.38	74.00	-23.62	PK
H	4874.00	40.85	30.55	5.77	24.66	40.73	54.00	-13.27	AV
H	7311.00	48.79	30.33	6.32	24.55	49.33	74.00	-24.67	PK
H	7311.00	40.36	30.33	6.32	24.55	40.9	54.00	-13.1	AV
H	9748.00	50.67	30.85	7.45	24.69	51.96	74.00	-22.04	PK
H	9748.00	40.73	30.85	7.45	24.69	42.02	54.00	-11.98	AV
H	12185.00	51.8	31.02	8.99	25.57	55.34	74.00	-18.66	PK
H	12185.00	40.53	31.02	8.99	25.57	44.07	54.00	-9.93	AV

Polar (H/V)	Frequency (MHz)	Meter Reading (dBuV)	Pre-amplifier (dB)	Cable Loss (dB)	Antenna Factor (dB)	Emission Level (dBuV/m)	Limits (dBuV/m)	Margin (dB)	Detector Type
High Channel:2462MHz									
V	4924.00	50.06	30.55	5.77	24.66	49.94	74.00	-24.06	PK
V	4924.00	40.19	30.55	5.77	24.66	40.07	54.00	-13.93	AV
V	7386.00	51.28	30.33	6.32	24.55	51.82	74.00	-22.18	PK
V	7386.00	40.31	30.33	6.32	24.55	40.85	54.00	-13.15	AV
V	9848.00	50.96	30.85	7.45	24.69	52.25	74.00	-21.75	PK
V	9848.00	40.15	30.85	7.45	24.69	41.44	54.00	-12.56	AV
V	12310.00	47.36	31.02	8.99	25.57	50.9	74.00	-23.1	PK
V	12310.00	40.18	31.02	8.99	25.57	43.72	54.00	-10.28	AV
H	4924.00	50.25	30.55	5.77	24.66	50.13	74.00	-23.87	PK
H	4924.00	40.85	30.55	5.77	24.66	40.73	54.00	-13.27	AV
H	7386.00	47.64	30.33	6.32	24.55	48.18	74.00	-25.82	PK
H	7386.00	40.13	30.33	6.32	24.55	40.67	54.00	-13.33	AV
H	9848.00	50.54	30.85	7.45	24.69	51.83	74.00	-22.17	PK
H	9848.00	40.36	30.85	7.45	24.69	41.65	54.00	-12.35	AV
H	12310.00	51.42	31.02	8.99	25.57	54.96	74.00	-19.04	PK
H	12310.00	40.92	31.02	8.99	25.57	44.46	54.00	-9.54	AV

Remark:
1. Emission Level = Meter Reading + Antenna Factor + Cable Loss – Pre-amplifier,
Margin= Emission Level - Limit
2. If peak below the average limit, the average emission was no test.
3. The amplitude of spurious emissions which are attenuated by more than 20dB below the permissible value has no need to be reported.

802.11n20

Polar (H/V)	Frequency (MHz)	Meter Reading (dBuV)	Pre-amplifier (dB)	Cable Loss (dB)	Antenna Factor (dB)	Emission Level (dBuV/m)	Limits (dBuV/m)	Margin (dB)	Detector Type
Low Channel:2412MHz									
V	4824.00	51.31	30.55	5.77	24.66	51.19	74.00	-22.81	PK
V	4824.00	40.28	30.55	5.77	24.66	40.16	54.00	-13.84	AV
V	7236.00	48.8	30.33	6.32	24.55	49.34	74.00	-24.66	PK
V	7236.00	40.72	30.33	6.32	24.55	41.26	54.00	-12.74	AV
V	9648.00	47.63	30.85	7.45	24.69	48.92	74.00	-25.08	PK
V	9648.00	41.05	30.85	7.45	24.69	42.34	54.00	-11.66	AV
V	12060.00	47.79	31.02	8.99	25.57	51.33	74.00	-22.67	PK
V	12060.00	40.52	31.02	8.99	25.57	44.06	54.00	-9.94	AV
H	4824.00	50.4	30.55	5.77	24.66	50.28	74.00	-23.72	PK
H	4824.00	40.13	30.55	5.77	24.66	40.01	54.00	-13.99	AV
H	7236.00	50.15	30.33	6.32	24.55	50.69	74.00	-23.31	PK
H	7236.00	40.14	30.33	6.32	24.55	40.68	54.00	-13.32	AV
H	9648.00	48.83	30.85	7.45	24.69	50.12	74.00	-23.88	PK
H	9648.00	40.83	30.85	7.45	24.69	42.12	54.00	-11.88	AV
H	12060.00	49.32	31.02	8.99	25.57	52.86	74.00	-21.14	PK
H	12060.00	40.93	31.02	8.99	25.57	44.47	54.00	-9.53	AV

Polar (H/V)	Frequency (MHz)	Meter Reading (dBuV)	Pre-amplifier (dB)	Cable Loss (dB)	Antenna Factor (dB)	Emission Level (dBuV/m)	Limits (dBuV/m)	Margin (dB)	Detector Type
Middle Channel:2437MHz									
V	4874.00	49.95	30.55	5.77	24.66	49.83	74.00	-24.17	PK
V	4874.00	40.79	30.55	5.77	24.66	40.67	54.00	-13.33	AV
V	7311.00	48.26	30.33	6.32	24.55	48.8	74.00	-25.2	PK
V	7311.00	40.68	30.33	6.32	24.55	41.22	54.00	-12.78	AV
V	9748.00	47.74	30.85	7.45	24.69	49.03	74.00	-24.97	PK
V	9748.00	40.96	30.85	7.45	24.69	42.25	54.00	-11.75	AV
V	12185.00	51.43	31.02	8.99	25.57	54.97	74.00	-19.03	PK
V	12185.00	40.56	31.02	8.99	25.57	44.1	54.00	-9.9	AV
H	4874.00	49.5	30.55	5.77	24.66	49.38	74.00	-24.62	PK
H	4874.00	40.65	30.55	5.77	24.66	40.53	54.00	-13.47	AV
H	7311.00	49.85	30.33	6.32	24.55	50.39	74.00	-23.61	PK
H	7311.00	40.77	30.33	6.32	24.55	41.31	54.00	-12.69	AV
H	9748.00	51.35	30.85	7.45	24.69	52.64	74.00	-21.36	PK
H	9748.00	40.84	30.85	7.45	24.69	42.13	54.00	-11.87	AV
H	12185.00	47.44	31.02	8.99	25.57	50.98	74.00	-23.02	PK
H	12185.00	40.28	31.02	8.99	25.57	43.82	54.00	-10.18	AV

Polar (H/V)	Frequency (MHz)	Meter Reading (dBuV)	Pre-amplifier (dB)	Cable Loss (dB)	Antenna Factor (dB)	Emission Level (dBuV/m)	Limits (dBuV/m)	Margin (dB)	Detector Type
High Channel:2462MHz									
V	4924.00	51.32	30.55	5.77	24.66	51.2	74.00	-22.8	PK
V	4924.00	40.83	30.55	5.77	24.66	40.71	54.00	-13.29	AV
V	7386.00	50.9	30.33	6.32	24.55	51.44	74.00	-22.56	PK
V	7386.00	40.66	30.33	6.32	24.55	41.2	54.00	-12.8	AV
V	9848.00	51.04	30.85	7.45	24.69	52.33	74.00	-21.67	PK
V	9848.00	40.92	30.85	7.45	24.69	42.21	54.00	-11.79	AV
V	12310.00	50.82	31.02	8.99	25.57	54.36	74.00	-19.64	PK
V	12310.00	40.58	31.02	8.99	25.57	44.12	54.00	-9.88	AV
H	4924.00	47.71	30.55	5.77	24.66	47.59	74.00	-26.41	PK
H	4924.00	40.98	30.55	5.77	24.66	40.86	54.00	-13.14	AV
H	7386.00	47.49	30.33	6.32	24.55	48.03	74.00	-25.97	PK
H	7386.00	40.38	30.33	6.32	24.55	40.92	54.00	-13.08	AV
H	9848.00	50.11	30.85	7.45	24.69	51.4	74.00	-22.6	PK
H	9848.00	41.11	30.85	7.45	24.69	42.4	54.00	-11.6	AV
H	12310.00	51.88	31.02	8.99	25.57	55.42	74.00	-18.58	PK
H	12310.00	40.63	31.02	8.99	25.57	44.17	54.00	-9.83	AV

802.11n40

Polar (H/V)	Frequency (MHz)	Meter Reading (dBuV)	Pre-amplifier (dB)	Cable Loss (dB)	Antenna Factor (dB)	Emission Level (dBuV/m)	Limits (dBuV/m)	Margin (dB)	Detector Type
Low Channel:2422MHz									
V	4844.00	50.27	30.55	5.77	24.66	50.15	74.00	-23.85	PK
V	4844.00	39.24	30.55	5.77	24.66	39.12	54.00	-14.88	AV
V	7266.00	47.76	30.33	6.32	24.55	48.3	74.00	-25.7	PK
V	7266.00	39.68	30.33	6.32	24.55	40.22	54.00	-13.78	AV
V	9688.00	46.59	30.85	7.45	24.69	47.88	74.00	-26.12	PK
V	9688.00	40.01	30.85	7.45	24.69	41.3	54.00	-12.7	AV
V	12110.00	46.75	31.02	8.99	25.57	50.29	74.00	-23.71	PK
V	12110.00	39.48	31.02	8.99	25.57	43.02	54.00	-10.98	AV
H	4844.00	49.36	30.55	5.77	24.66	49.24	74.00	-24.76	PK
H	4844.00	39.09	30.55	5.77	24.66	38.97	54.00	-15.03	AV
H	7266.00	49.11	30.33	6.32	24.55	49.65	74.00	-24.35	PK
H	7266.00	39.1	30.33	6.32	24.55	39.64	54.00	-14.36	AV
H	9688.00	47.79	30.85	7.45	24.69	49.08	74.00	-24.92	PK
H	9688.00	39.79	30.85	7.45	24.69	41.08	54.00	-12.92	AV
H	12110.00	48.28	31.02	8.99	25.57	51.82	74.00	-22.18	PK
H	12110.00	39.89	31.02	8.99	25.57	43.43	54.00	-10.57	AV

Polar (H/V)	Frequency (MHz)	Meter Reading (dBuV)	Pre-amplifier (dB)	Cable Loss (dB)	Antenna Factor (dB)	Emission Level (dBuV/m)	Limits (dBuV/m)	Margin (dB)	Detector Type
Middle Channel:2437MHz									
V	4904.00	47.87	30.55	5.77	24.66	47.75	74.00	-26.25	PK
V	4904.00	38.71	30.55	5.77	24.66	38.59	54.00	-15.41	AV
V	7356.00	46.18	30.33	6.32	24.55	46.72	74.00	-27.28	PK
V	7311.00	38.6	30.33	6.32	24.55	39.14	54.00	-14.86	AV
V	9808.00	45.66	30.85	7.45	24.69	46.95	74.00	-27.05	PK
V	9808.00	38.88	30.85	7.45	24.69	40.17	54.00	-13.83	AV
V	12260.00	49.35	31.02	8.99	25.57	52.89	74.00	-21.11	PK
V	12260.00	38.48	31.02	8.99	25.57	42.02	54.00	-11.98	AV
H	4904.00	47.42	30.55	5.77	24.66	47.3	74.00	-26.7	PK
H	4904.00	38.57	30.55	5.77	24.66	38.45	54.00	-15.55	AV
H	7356.00	47.77	30.33	6.32	24.55	48.31	74.00	-25.69	PK
H	7311.00	38.69	30.33	6.32	24.55	39.23	54.00	-14.77	AV
H	9808.00	49.27	30.85	7.45	24.69	50.56	74.00	-23.44	PK
H	9808.00	38.76	30.85	7.45	24.69	40.05	54.00	-13.95	AV
H	12260.00	45.36	31.02	8.99	25.57	48.9	74.00	-25.1	PK
H	12260.00	38.2	31.02	8.99	25.57	41.74	54.00	-12.26	AV

Polar (H/V)	Frequency (MHz)	Meter Reading (dBuV)	Pre-amplifier (dB)	Cable Loss (dB)	Antenna Factor (dB)	Emission Level (dBuV/m)	Limits (dBuV/m)	Margin (dB)	Detector Type
High Channel:2452MHz									
V	4924.00	51.32	30.55	5.77	24.66	51.2	74.00	-22.8	PK
V	4924.00	40.83	30.55	5.77	24.66	40.71	54.00	-13.29	AV
V	7386.00	50.9	30.33	6.32	24.55	51.44	74.00	-22.56	PK
V	7386.00	40.66	30.33	6.32	24.55	41.2	54.00	-12.8	AV
V	9848.00	51.04	30.85	7.45	24.69	52.33	74.00	-21.67	PK
V	9848.00	40.92	30.85	7.45	24.69	42.21	54.00	-11.79	AV
V	12310.00	50.82	31.02	8.99	25.57	54.36	74.00	-19.64	PK
V	12310.00	40.58	31.02	8.99	25.57	44.12	54.00	-9.88	AV
H	4924.00	47.71	30.55	5.77	24.66	47.59	74.00	-26.41	PK
H	4924.00	40.98	30.55	5.77	24.66	40.86	54.00	-13.14	AV
H	7386.00	47.49	30.33	6.32	24.55	48.03	74.00	-25.97	PK
H	7386.00	40.38	30.33	6.32	24.55	40.92	54.00	-13.08	AV
H	9848.00	50.11	30.85	7.45	24.69	51.4	74.00	-22.6	PK
H	9848.00	41.11	30.85	7.45	24.69	42.4	54.00	-11.6	AV
H	12310.00	51.88	31.02	8.99	25.57	55.42	74.00	-18.58	PK
H	12310.00	40.63	31.02	8.99	25.57	44.17	54.00	-9.83	AV

Remark:
1. Emission Level = Meter Reading + Antenna Factor + Cable Loss – Pre-amplifier,
Margin= Emission Level - Limit
2. If peak below the average limit, the average emission was no test.
3. The amplitude of spurious emissions which are attenuated by more than 20dB below the permissible value has no need to be reported.

5.RADIATED BAND EMISSIONMEASUREMENT

5.1 TEST REQUIREMENT:

Test Requirement:	FCC Part15 C Section 15.209 and 15.205
Test Method:	ANSI C63.10: 2013
Test Frequency Range:	All of the restrict bands were tested, only the worst band's (2310MHz to 2500MHz) data was showed.
Test site:	Measurement Distance: 3m
Receiver setup:	

Frequency	Detector	RBW	VBW	Value
Above 1GHz	Peak	1MHz	3MHz	Peak
	Average	1MHz	3MHz	Average

LIMITS OF RADIATED EMISSION MEASUREMENT (Above 1000MHz)

FREQUENCY (MHz)	Class B (dBuV/m) (at 3M)	
	PEAK	AVERAGE
Above 1000	74	54

Notes:

(1) The limit for radiated test was performed according to FCC PART 15C.

(2) The tighter limit applies at the band edges.

(3) Emission level (dBuV/m)=20log Emission level (uV/m).

5.2 TEST PROCEDURE

Above 1GHz test procedure as below:

a. 1. The EUT was placed on the top of a rotating table 1.5 meters above the ground at a 3 meter camber. The table was rotated 360 degrees to determine the position of the highest radiation.

b. The EUT was set 3 meters away from the interference-receiving antenna, which was mounted on the top of a variable-height antenna tower.

c. The antenna height is varied from one meter to four meters above the ground to determine the maximum value of the field strength. Both horizontal and vertical polarizations of the antenna are set to make the measurement.

d. For each suspected emission, the EUT was arranged to its worst case and then the antenna was tuned to heights from 1 meter to 4 meters and the rota table was turned from 0 degrees to 360 degrees to find the maximum reading.

e. The test-receiver system was set to Peak Detect Function and Specified Bandwidth with Maximum Hold Mode.

f. If the emission level of the EUT in peak mode was 10dB lower than the limit specified, then testing could bestopped and the peak values of the EUT would be reported. Otherwise the emissions that did not have 10dBmargin would be re-tested one by one using peak, quasi-peak or average method as specified and then reportedin a data sheet.

g. Test the EUT in the lowest channel,the Highest channel

Note:

Both horizontal and vertical antenna polarities were tested
and performed pretest to three orthogonal axis. The worst case emissions were reported

5.3 DEVIATION FROM TEST STANDARD

No deviation

5.4 TEST SETUP

Radiated Emission Test-Up Frequency Above 1GHz

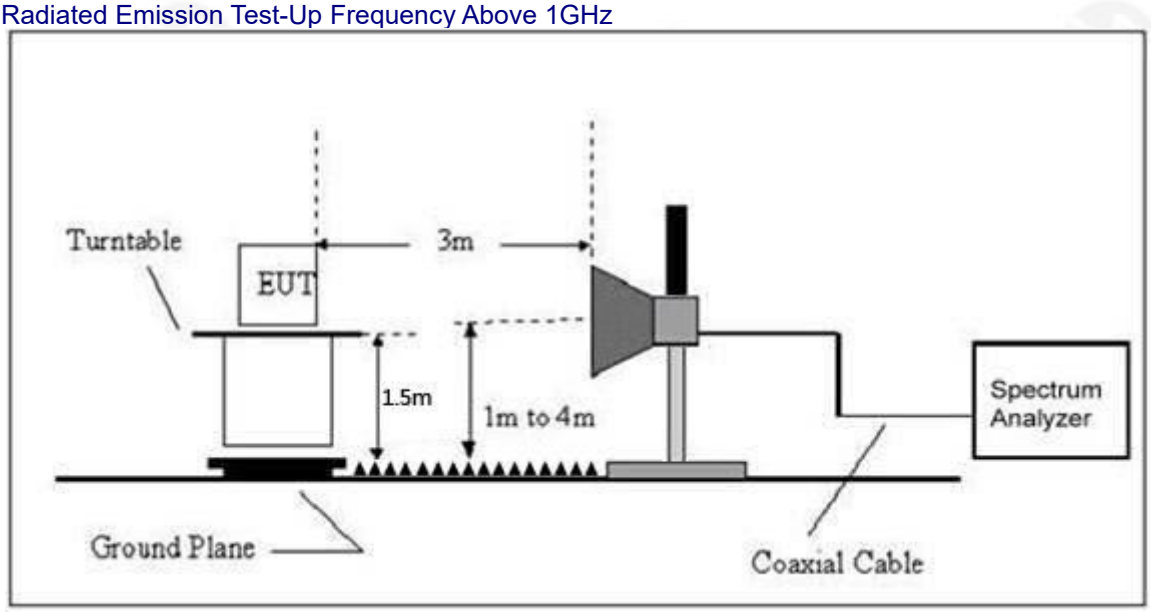

5.5 EUT OPERATING CONDITIONS

The EUT tested system was configured as the statements of 2.3 Unless otherwise a special operating condition is specified in the follows during the testing.

5.6 TEST RESULT

	Polar (H/V)	Frequency (MHz)	Meter Reading (dBuV)	Pre-amplifier (dB)	Cable Loss (dB)	Antenna Factor (dB/m)	Emission level (dBuV/m)	Limit (dBuV/m)	Detector Type	Result
802.11b	LowChannel 2412MHz									
	H	2390.00	53.53	30.22	4.85	23.98	52.14	74.00	PK	PASS
	H	2390.00	43.99	30.22	4.85	23.98	42.6	54.00	AV	PASS
	H	2400.00	52.97	30.22	4.85	23.98	51.58	74.00	PK	PASS
	H	2400.00	43.82	30.22	4.85	23.98	42.43	54.00	AV	PASS
	V	2390.00	53.74	30.22	4.85	23.98	52.35	74.00	PK	PASS
	V	2390.00	43.69	30.22	4.85	23.98	42.3	54.00	AV	PASS
	V	2400.00	53.82	30.22	4.85	23.98	52.43	74.00	PK	PASS
	V	2400.00	44.45	30.22	4.85	23.98	43.06	54.00	AV	PASS
	HighChannel 2462MHz									
	H	2483.50	52.59	30.22	4.85	23.98	51.2	74.00	PK	PASS
	H	2500.00	43.91	30.22	4.85	23.98	42.52	54.00	AV	PASS
	H	2483.50	54.04	30.22	4.85	23.98	52.65	74.00	PK	PASS
	H	2500.00	44.38	30.22	4.85	23.98	42.99	54.00	AV	PASS
	V	2483.50	52.97	30.22	4.85	23.98	51.58	74.00	PK	PASS
	V	2500.00	43.83	30.22	4.85	23.98	42.44	54.00	AV	PASS
	V	2483.50	54.49	30.22	4.85	23.98	53.1	74.00	PK	PASS
	V	2500.00	44.35	30.22	4.85	23.98	42.96	54.00	AV	PASS
802.11g	LowChannel 2412MHz									
	H	2390.00	53.01	30.22	4.85	23.98	51.62	74.00	PK	PASS
	H	2390.00	43.8	30.22	4.85	23.98	42.41	54.00	AV	PASS
	H	2400.00	54.36	30.22	4.85	23.98	52.97	74.00	PK	PASS
	H	2400.00	44.48	30.22	4.85	23.98	43.09	54.00	AV	PASS
	V	2390.00	52.7	30.22	4.85	23.98	51.31	74.00	PK	PASS
	V	2390.00	44.23	30.22	4.85	23.98	42.84	54.00	AV	PASS
	V	2400.00	54.41	30.22	4.85	23.98	53.02	74.00	PK	PASS
	V	2400.00	44.33	30.22	4.85	23.98	42.94	54.00	AV	PASS
	High Channel 2462MHz									
	H	2483.50	54.32	30.22	4.85	23.98	52.93	74.00	PK	PASS
	H	2500.00	43.64	30.22	4.85	23.98	42.25	54.00	AV	PASS
	H	2483.50	53.93	30.22	4.85	23.98	52.54	74.00	PK	PASS
	H	2500.00	44.2	30.22	4.85	23.98	42.81	54.00	AV	PASS
	V	2483.50	53.84	30.22	4.85	23.98	52.45	74.00	PK	PASS
	V	2500.00	44.44	30.22	4.85	23.98	43.05	54.00	AV	PASS
	V	2483.50	53.79	30.22	4.85	23.98	52.4	74.00	PK	PASS
	V	2500.00	44.33	30.22	4.85	23.98	42.94	54.00	AV	PASS
802.11n20	LowChannel 2412MHz									
	H	2390.00	53.38	30.22	4.85	23.98	51.99	74.00	PK	PASS
	H	2390.00	43.91	30.22	4.85	23.98	42.52	54.00	AV	PASS
	H	2400.00	54.11	30.22	4.85	23.98	52.72	74.00	PK	PASS
	H	2400.00	43.68	30.22	4.85	23.98	42.29	54.00	AV	PASS
	V	2390.00	54.22	30.22	4.85	23.98	52.83	74.00	PK	PASS
	V	2390.00	44.01	30.22	4.85	23.98	42.62	54.00	AV	PASS
	V	2400.00	54.27	30.22	4.85	23.98	52.88	74.00	PK	PASS
	V	2400.00	43.59	30.22	4.85	23.98	42.2	54.00	AV	PASS
	High Channel 2462MHz									
	H	2483.50	55.55	30.22	4.85	23.98	54.16	74.00	PK	PASS
	H	2500.00	44.87	30.22	4.85	23.98	43.48	54.00	AV	PASS
	H	2483.50	55.16	30.22	4.85	23.98	53.77	74.00	PK	PASS
	H	2500.00	45.43	30.22	4.85	23.98	44.04	54.00	AV	PASS
	V	2483.50	55.07	30.22	4.85	23.98	53.68	74.00	PK	PASS
	V	2500.00	45.67	30.22	4.85	23.98	44.28	54.00	AV	PASS
	V	2483.50	55.02	30.22	4.85	23.98	53.63	74.00	PK	PASS

	V	2500.00	45.56	30.22	4.85	23.98	44.17	54.00	AV	PASS
802.11n40	LowChannel 2422MHz									
	H	2390.00	53.38	30.22	4.85	23.98	51.99	74.00	PK	PASS
	H	2390.00	43.91	30.22	4.85	23.98	42.52	54.00	AV	PASS
	H	2400.00	54.11	30.22	4.85	23.98	52.72	74.00	PK	PASS
	H	2400.00	43.68	30.22	4.85	23.98	42.29	54.00	AV	PASS
	V	2390.00	54.22	30.22	4.85	23.98	52.83	74.00	PK	PASS
	V	2390.00	44.01	30.22	4.85	23.98	42.62	54.00	AV	PASS
	V	2400.00	54.27	30.22	4.85	23.98	52.88	74.00	PK	PASS
	V	2400.00	43.59	30.22	4.85	23.98	42.2	54.00	AV	PASS
	High Channel 2462MHz									
	H	2483.50	53.57	30.22	4.85	23.98	52.18	74.00	PK	PASS
	H	2500.00	42.88	30.22	4.85	23.98	41.49	54.00	AV	PASS
	H	2483.50	54.17	30.22	4.85	23.98	52.78	74.00	PK	PASS
	H	2500.00	44.44	30.22	4.85	23.98	43.05	54.00	AV	PASS
	V	2483.50	54.09	30.22	4.85	23.98	52.7	74.00	PK	PASS
	V	2500.00	44.7	30.22	4.85	23.98	43.31	54.00	AV	PASS
	V	2483.50	54.01	30.22	4.85	23.98	52.62	74.00	PK	PASS
	V	2500.00	44.46	30.22	4.85	23.98	43.07	54.00	AV	PASS

Remark:

1. Emission Level = Meter Reading + Antenna Factor + Cable Loss – Pre-amplifier, Margin= Emission Level - Limit

6.POWER SPECTRAL DENSITY TEST

Test Requirement:	FCC Part15 C Section 15.247 (e)
Test Method:	KDB558074 D0115.247 Meas Guidance v05r02

6.1 APPLIED PROCEDURES / LIMIT

FCC Part15 (15.247) , Subpart C				
Section	Test Item	Limit	Frequency Range (MHz)	Result
15.247	Power Spectral Density	8dBm/3kHz	2400-2483.5	PASS

6.2 TEST PROCEDURE

1. Set analyzer center frequency to DTS channel center frequency.
2. Set the span to 1.5 times the Occupied bandwidth.
3. Set the RBW to: 3 kHz ≤ RBW ≤ 100 kHz.
4. Set the VBW ≥ 3 x RBW.
5. Detector = peak.
6. Sweep time = auto couple.
7. Trace mode = max hold.
8. Allow trace to fully stabilize.
9. Use the peak marker function to determine the maximum amplitude level within the RBW.
10. If measured value exceeds limit, reduce RBW (no less than 3 kHz) and repeat.

6.3 DEVIATION FROM STANDARD

No deviation.

6.4 TEST SETUP

6.5 EUT OPERATION CONDITIONS

The EUT tested system was configured as the statements of 2.1 Unless otherwise a special operating condition is specified in the follows during the testing.

6.6 TEST RESULT

Measurement Data : The detailed test data see Appendix Ⅱ

7. -6 BANDWIDTH& 99% OCCUPY BANDWIDTH

Test Requirement:	FCC Part15 C Section 15.247 (a)(2)
Test Method:	KDB558074 D0115.247 Meas Guidancev05r02

7.1 APPLIED PROCEDURES / LIMIT

FCC Part15 (15.247) , Subpart C				
Section	Test Item	Limit	Frequency Range (MHz)	Result
15.247(a)(2)	Bandwidth	>= 500KHz (6dB bandwidth)	2400-2483.5	PASS

7.2 TEST PROCEDURE

1. Set RBW = 100 kHz.
2. Set the video bandwidth (VBW) ≥ 3 xRBW.
3. Detector = Peak.
4. Trace mode = max hold.
5. Sweep = auto couple.
6. Allow the trace to stabilize.
7. Measure the maximum width of the emission that is constrained by the frequencies associated with the two outermost amplitude points (upper and lower frequencies) that are attenuated by 6 dB relative to the maximum level measured in the fundamental emission.

7.3 DEVIATION FROM STANDARD

No deviation.

7.4 TEST SETUP

7.5 EUT OPERATION CONDITIONS

The EUT tested system was configured as the statements of 2.4 Unless otherwise a special operating condition is specified in the follows during the testing.

7.6 TEST RESULT

Measurement Data : The detailed test data see Appendix Ⅱ

8.PEAK OUTPUT POWER TEST

Test Requirement:	FCC Part15 C Section 15.247 (b)(3)
Test Method:	KDB558074 D0115.247 Meas Guidance v05r02

8.1 APPLIED PROCEDURES/LIMIT

FCC Part15 (15.247) , Subpart C				
Section	Test Item	Limit	Frequency Range (MHz)	Result
15.247(b)(3)	Peak Output Power	1 watt or 30dBm	2400-2483.5	PASS

8.2 TEST PROCEDURE

a. The EUT was directly connected to the Power meter

8.3 DEVIATION FROM STANDARD

No deviation.

8.4 TEST SETUP

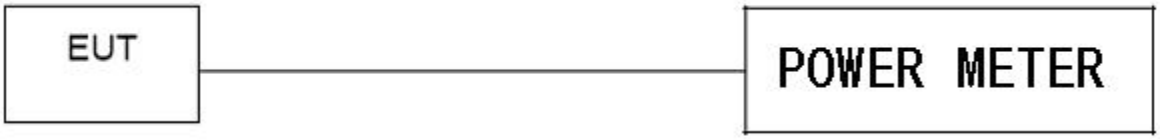

8.5 EUT OPERATION CONDITIONS

The EUT tested system was configured as the statements of 2.4 Unless otherwise a special operating condition is specified in the follows during the testing.

8.6 TEST RESULT

Measurement Data : The detailed test data see Appendix Ⅱ

9. CONDUCTED BAND EDGE AND SPURIOUS EMISSION

Test Requirement:	FCC Part15 C Section 15.247 (d)
Test Method:	KDB558074 D0115.247 Meas Guidance v05r02

9.1 APPLICABLE STANDARD

in any 100 kHz bandwidth outside the frequency bands in which the spread spectrum intentional radiator in operating, the radio frequency power that is produced by the intentional radiator shall be at least 20dB below that in the 100kHz bandwidth within the band that contains the highest level of the desired power, In addition, radiated emissions which fall in the restricted bands, as defined in§15.205(a), must also comply with the radiated emission limits specified in15.209(a).

9.2 TEST PROCEDURE

Using the following spectrum analyzer setting:

A) Set the RBW = 100KHz.
B) Set the VBW = 300KHz.
C) Sweep time = auto couple.
D) Detector function = peak.
E) Trace mode = max hold.
F) Allow trace to fully stabilize.

9.3 DEVIATION FROM STANDARD

No deviation.

9.4 TEST SETUP

9.5 EUT OPERATION CONDITIONS

The EUT tested system was configured as the statements of 2.4 Unless otherwise a special operating condition is specified in the follows during the testing.

9.6 TEST RESULTS

Measurement Data : The detailed test data see Appendix Ⅱ

10. ANTENNA REQUIREMENT

Standard requirement:	FCC Part15 C Section 15.203 /247(c)
15.203 requirement: An intentional radiator shall be designed to ensure that no antenna other than that furnished by the responsible party shall be used with the device. The use of a permanently attached antenna or of an antenna that uses a unique coupling to the intentional radiator, the manufacturer may design the unit so that a broken antenna can be replaced by the user, but the use of a standard antenna jack or electrical connector is prohibited. 15.247(c) (1)(i) requirement: (i) Systems operating in the 2400-2483.5 MHz band that is used exclusively for fixed. Point-to-point operations may employ transmitting antennas with directional gain greater than 6dBi provided the maximum conducted output power of the intentional radiator is reduced by 1 dB for every 3 dB that the directional gain of the antenna exceeds 6dBi.	
EUT Antenna:	
The antenna is FPC antenna, the best case gain of the antenna is 0.25 dBi, reference to the Appendix -EUT PHOTO Internal Photos for details	

11. TEST SETUP PHOTO

Reference to the appendix **Test Setup Photo** for details.

12. EUT CONSTRUCTIONAL DETAILS

Reference to the appendix External Photos & Internal Photos for details.

※※※※※ END OF REPORT ※※※※※