ASSEMBLY INSTRUCTIONS

Electric Angular Adjustable TV Stand

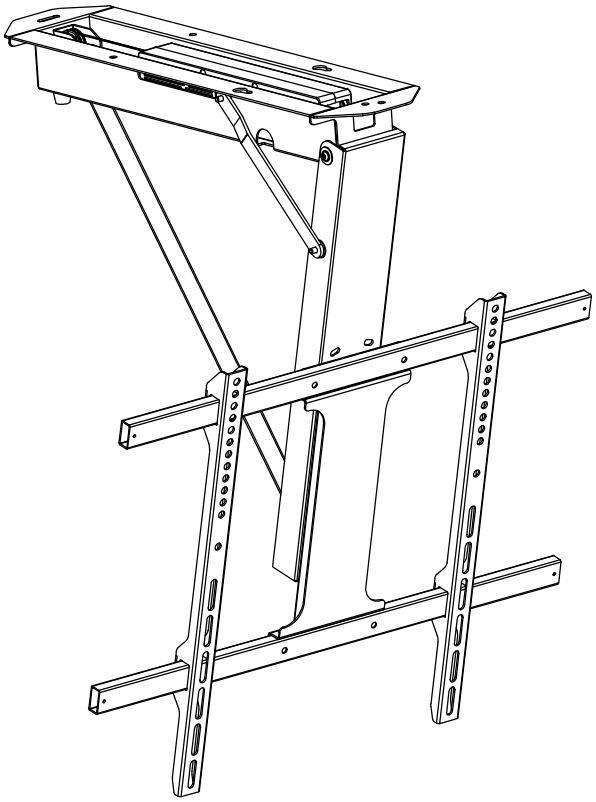

Parts List

NOTE:SOME HARDWARE INCLUDED MAY NOT BE USED

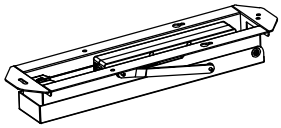

A ×1
Mount

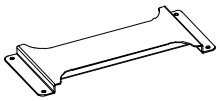

B ×1
Center Plate

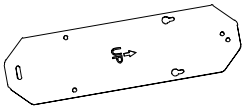

C ×1
Ceiling Template

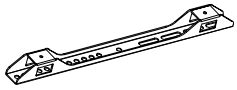

D ×2
VESA Bracket

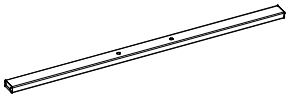

E ×2
Bracket Rail

F ×1
AC Adapter

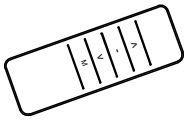

G ×1
Remote

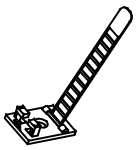

H ×5
Cable Tie

I ×9
M6×12mm Screw

J ×4
M6×30mm Screw

K ×4
M6×16 Black Washer

L ×4
M6 Nut

M ×4
M4×6mm Screw

N_1 ×4
M5×14mm Screw

N_2 ×4
M6×14mm Screw

N_3 ×4
M6×30mm Screw

N_4 ×4
M8×30mm Screw

N_5 ×4
M8×50mm Screw

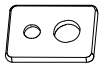

N_6 ×4
Square Washer

N_7 ×8
Small Spacer

N_8 ×8
Large Spacer

O_1 ×6
ST6.2×55mm Screw

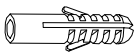

O_2 ×6
Concrete Anchor

O_3 ×4
16×6.5 Galvanized Washer

P ×1
5×80 Allen Wrench

Q ×1
Phillips Screwdriver

Assembly
STEP 1:Installing the Mount

※ **Please complete the code paring between receiver and remote control before assembling the TV mount to the ceiling**

OPTION A:Wood Ceiling

Using Ceiling Template(C),mark exact location of mounting holes.Drill pilot holes 2.2" deep using a 4.5mm drill bit.Insert two ST6.2x55mm Screws(O_1),leaving a 5mm gap from ceiling.Hang Mount(A) so that the screws fit into the keyhole openings,Slide Mount(A) backward,then secure using additional ST6.2x55mm Screws(O_1) with 16x6.5 Galvanized Washers(O_3).

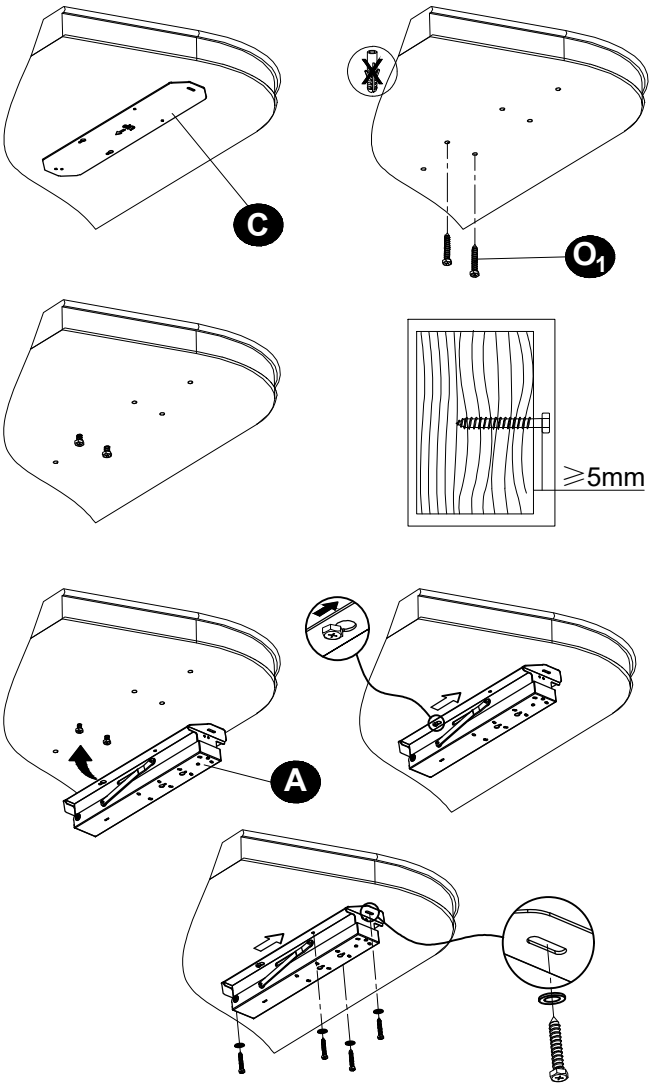

NOTE: If mounting to a wood beam ceiling,ensure the front and back holes are used for the main support if mount is in line with the beam.If perpendicular to the beam,use keyhole openings for the main support.**Do NOT** use included Concrete Anchors(O_2) for wood or drywall.

OPTION B:Concrete Ceiling

Using Ceiling Template(C),mark exact location of mounting holes.Drill pilot holes 2.4" deep using a 10mm drill bit.Insert six Anchors(O_2),then tighten two ST6.2x55mm Screws(O_1),leaving a 5mm gap from ceiling.Hang Mount(A) so that the screws fit into the keyhole openings,Slide Mount(A) backward,then secure using additional ST6.2x55mm Screws(O_1) with 16x6.5 Galvanized Washers(O_3).Tighten all screws.

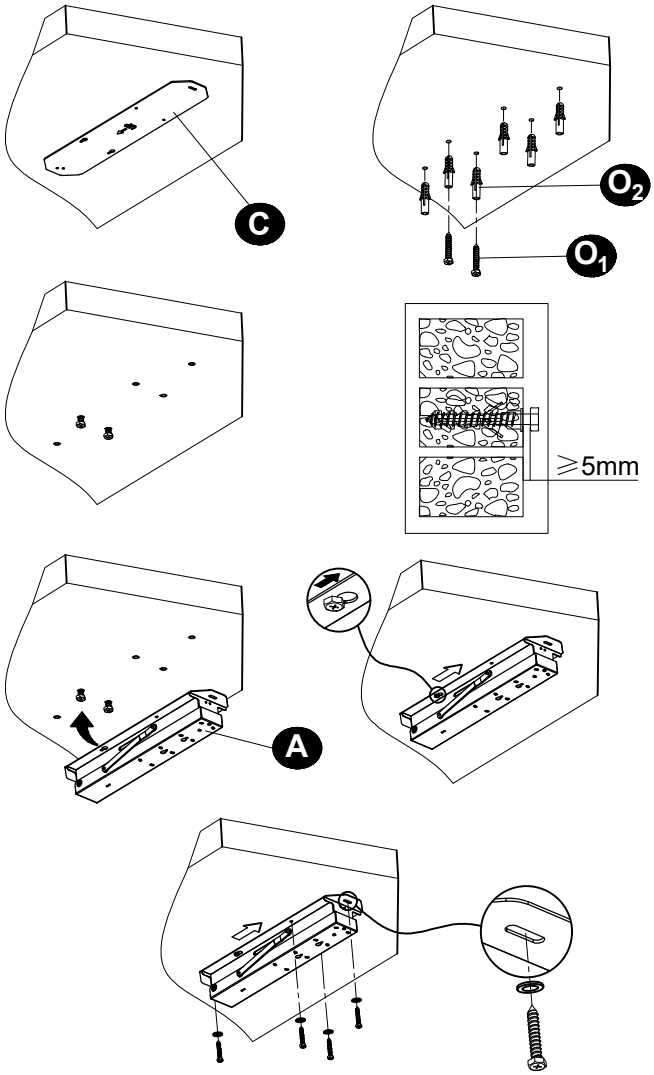

NOTE: O_1 Concentric installation, do not tilt installation

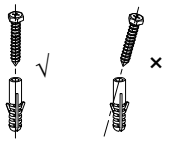

Checklist

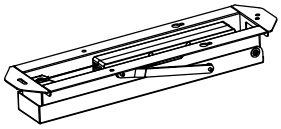

A ×1
Mount

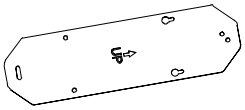

C ×1
Ceiling Template

O_1 ×6
ST6.2×55mm Screw

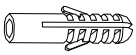

O_2 ×6
Concrete Anchor

O_3 ×4
16×6.5 Galvanized Washer

Assembly
STEP 2:Assembling VESA Components

Assemble Bracket Rails(E) to Center Plate(B) using M6x30mm Screws(J),M6x16 Black Washer(K) and M6 Nuts(L). While holding M6 Nuts(L) with a wrench,use a Phillips screwdriver to tighten M6x30mm Screws(J).Slide VESA Brackets(D) onto Bracket Rails(E) and secure using M4x6mm Screws(M) and 5x80 Allen Wrench(P).

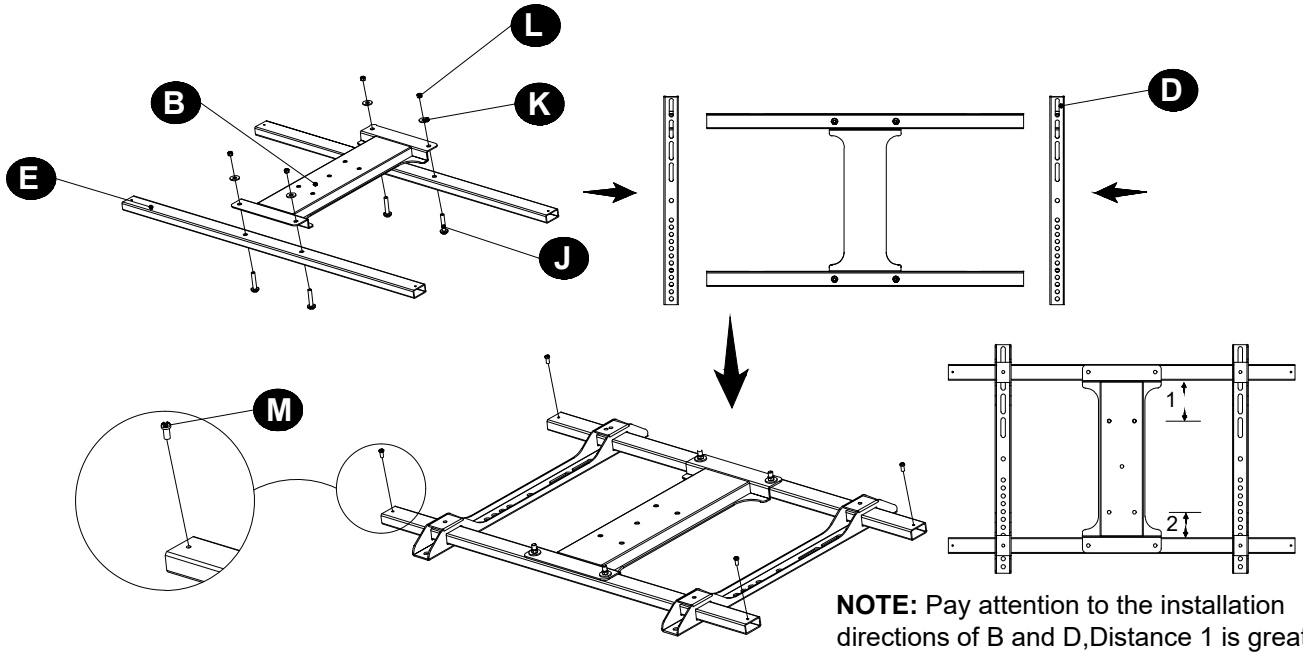

NOTE: Pay attention to the installation directions of B and D,Distance 1 is greater than distance 2

Adjust VESA Brackets spacing to match TV mounting holes,and lock in place using Set Screw and 5x80 Allen Wrench.Insert one M6x12mm Screws(I),leaving a 5mm gap from Center Plate.

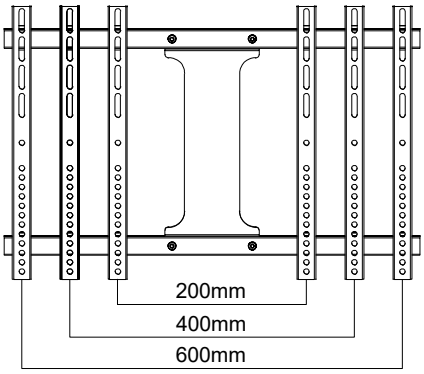

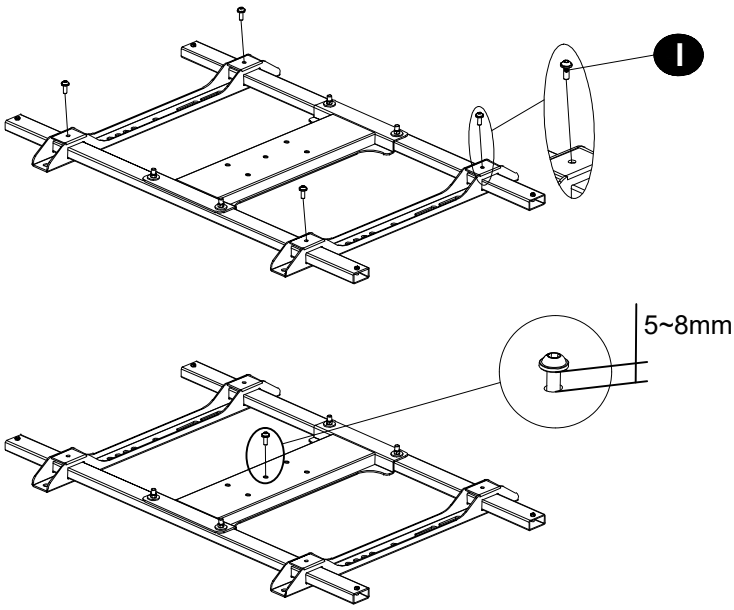

Checklist

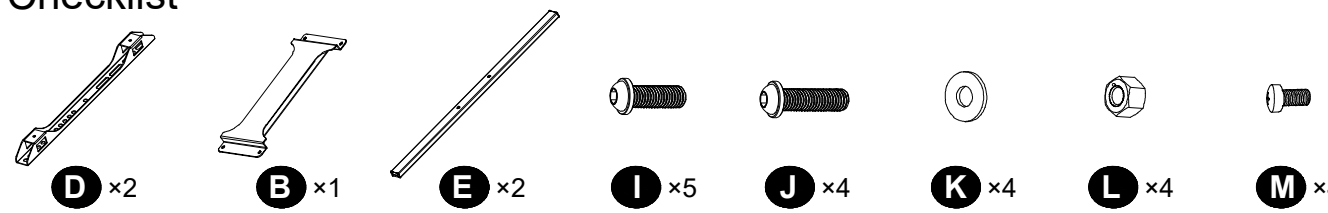

D ×2	B ×1	E ×2	I ×5	J ×4	K ×4	L ×4	M ×4
VESA Bracket	Center Plate	Bracket Rail	M6×12mm Screw	M6×30mm Screw	M6×16 Black Washer	M6 Nut	M4×6mm Screw

Assembly
STEP 3:Mounting VESA Assembly

OPTION A:Flat Back TV
Align the VESA bracket assembly with the mounting holes in the back of the TV screen. Install assembly to TV using appropriate screws (N1, N2) and Square Washers (N6) according to your screen's requirements.

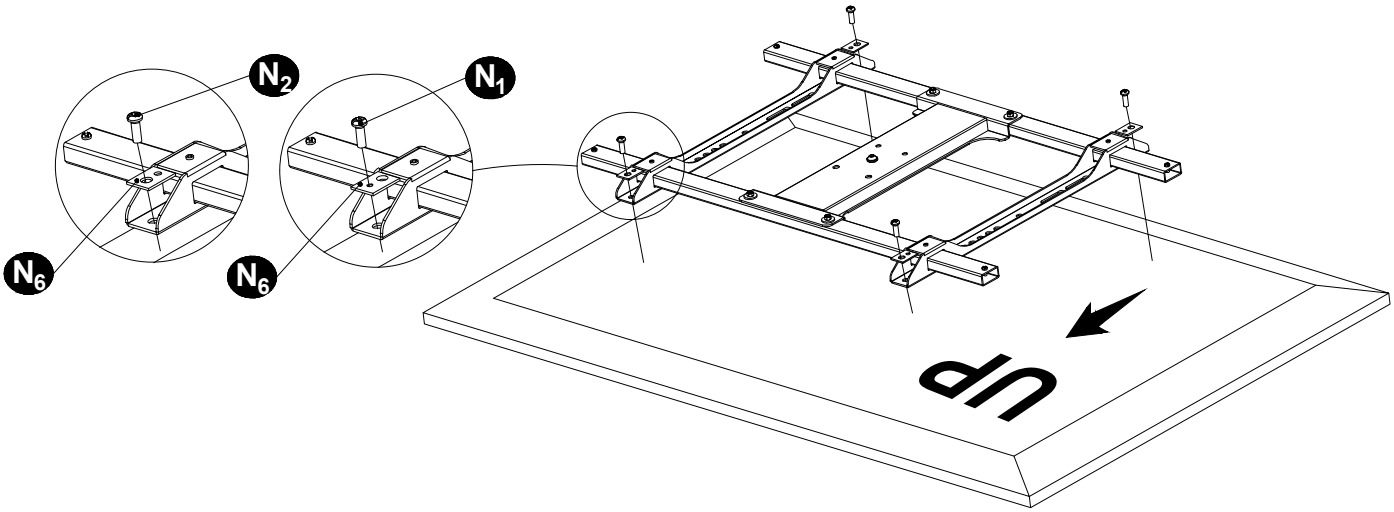

OPTION B: Curved/Recessed Back TV
Align the VESA bracket assembly with the mounting holes in the back of the TV screen. Install assembly to TV using appropriate screws (N3, N4, N5), Square Washers (N6) and Spacers (N7, N8) according to your screen's requirements.

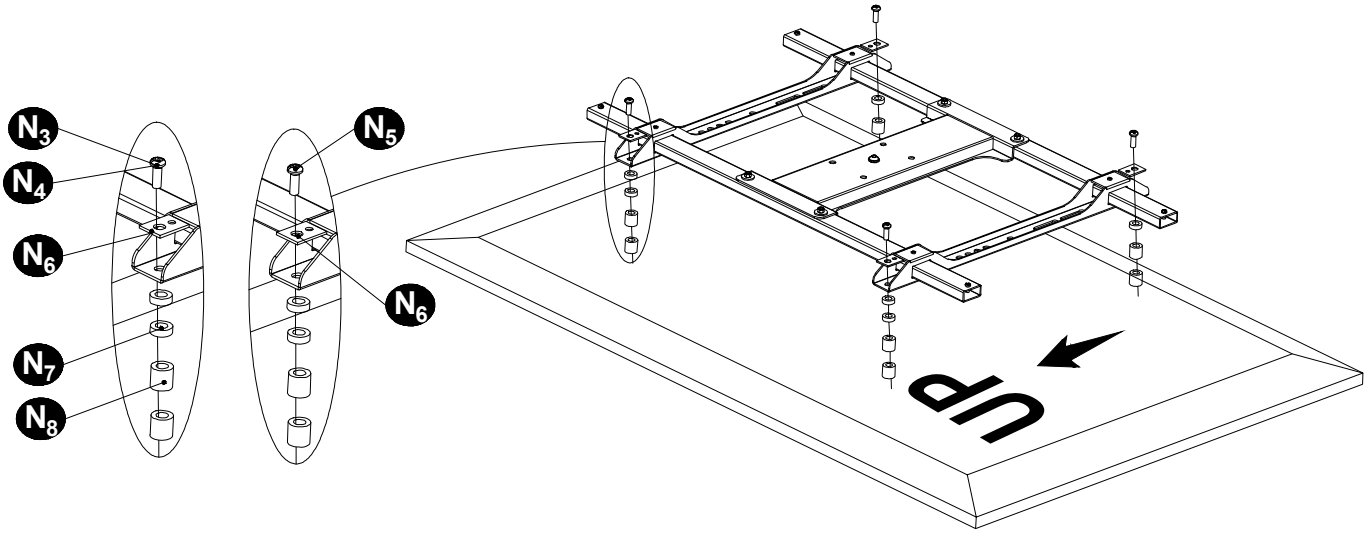

Checklist

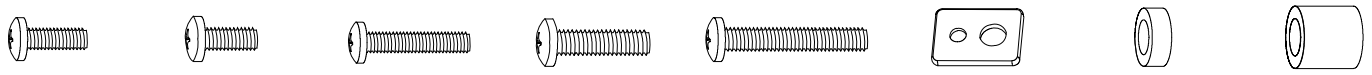

N1 ×4	N2 ×4	N3 ×4	N4 ×4	N5 ×4	N6 ×4	N7 ×8	N8 ×8
M5×14mm Screw	M6×14mm Screw	M6×30mm Screw	M8×30mm Screw	M8×50mm Screw	Square Washer	Small Spacer	Large Spacer

Assembly
STEP 4:Place TV on Mount

First connect the adapter cable to the host, and turn on the power (after the power can hear three announcements). Press the down button of the remote control to make the support slowly drop to the lower limit point, and disconnect the adapter power supply after falling into place.

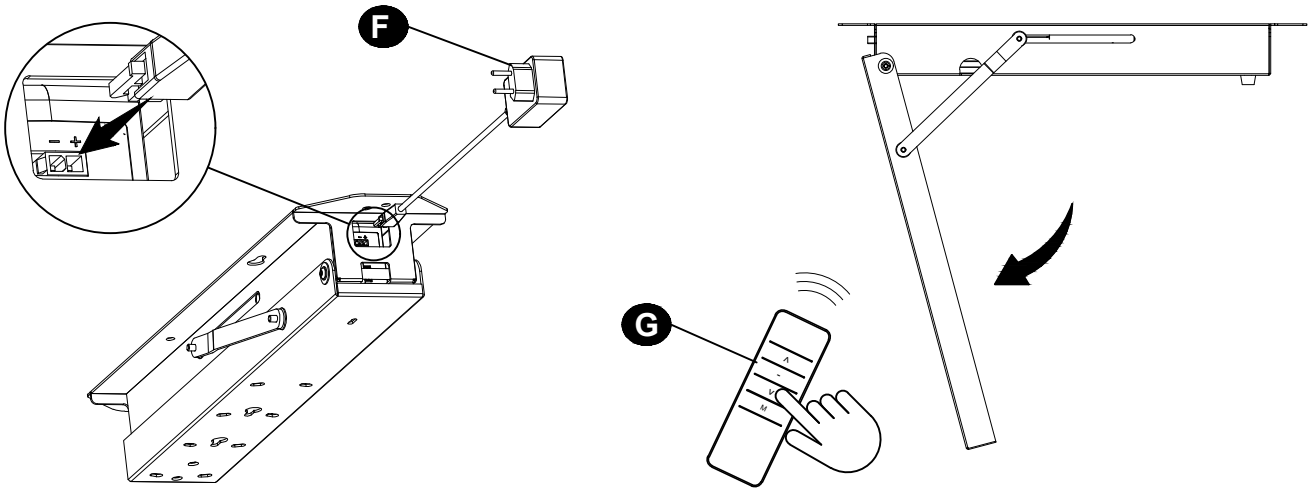

Note: Must be Power off, before the subsequent installation !

Place the TV with VESA bracket assembly on Mount (A) by inserting the center screw on Center Plate (B) into the keyhole on Mount A) at the desired height. Secure using other four M6x10 Screws(R) and tighten them, Clearance between the ceiling and top edge of TV should be no less than 50mm when TV is in the fully lowered position.

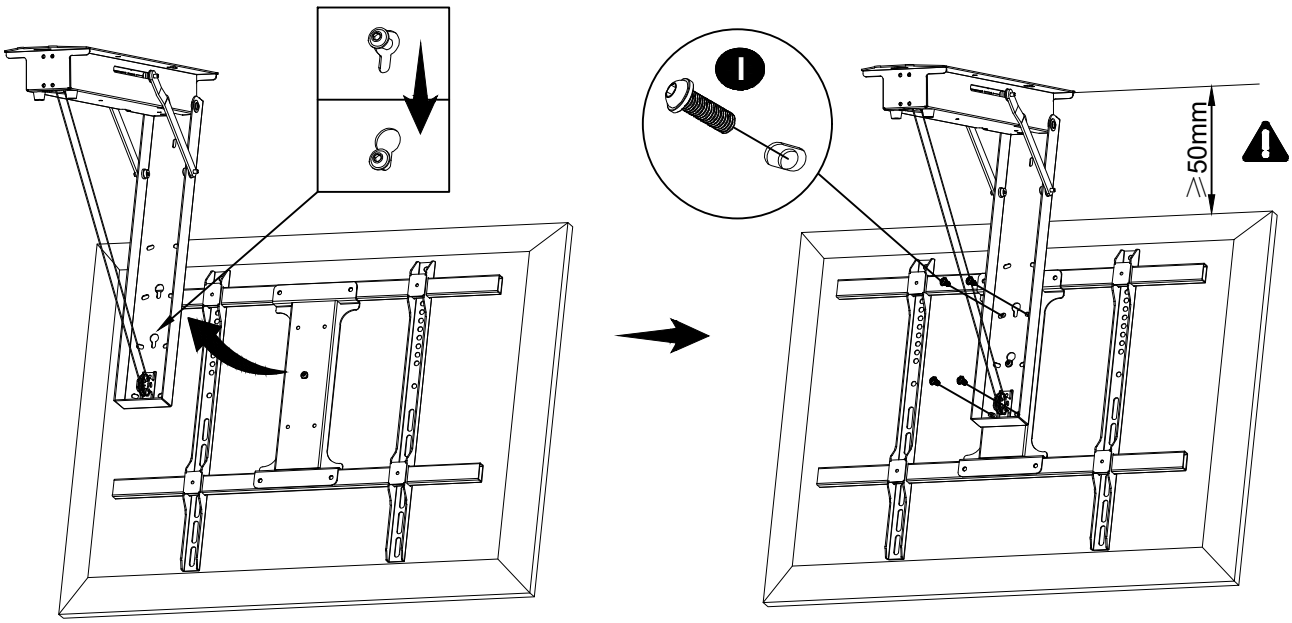

Checklist

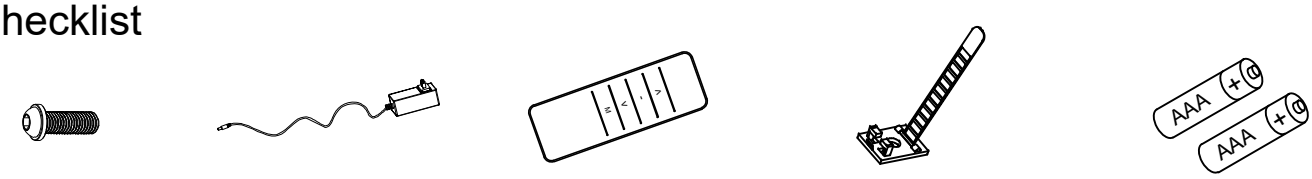

I ×4	F ×1	G ×1	H ×5	
M6×12mm Screw	AC Adapter	Remote	Cable Tie	AAA Battery x2 (Not in the package)

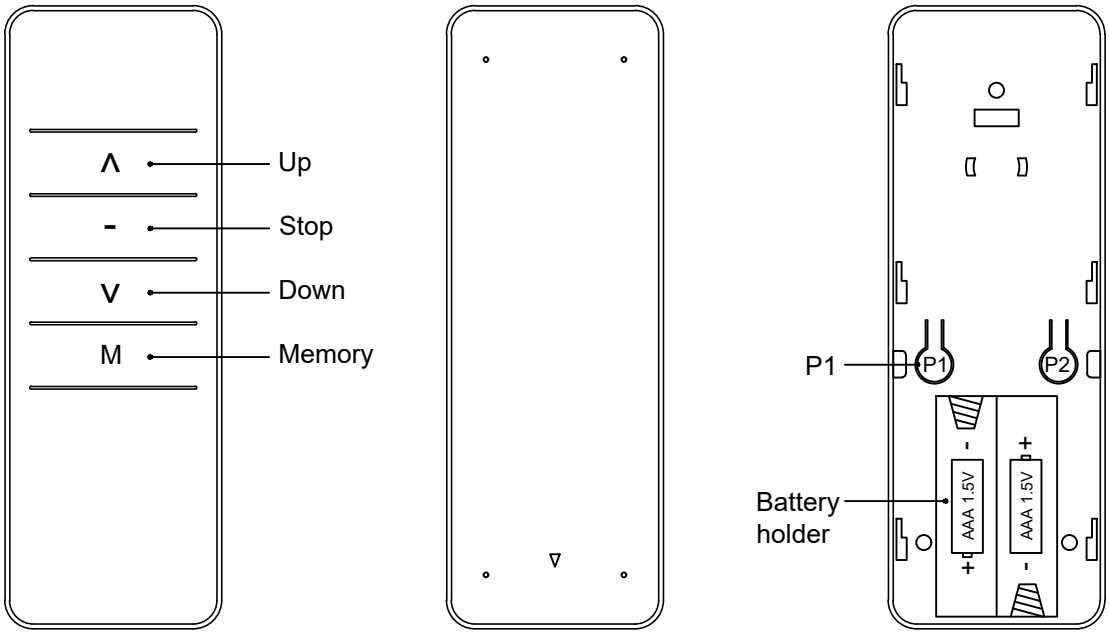

◆ Up and Down

Press "∧" button to fold the TV mount.
Press "∨" button to unfold the TV mount.
Press "-" button and the TV mount stops running.

◆ Saving position

Adjust the TV to the required Angle, long press the remote control "M" key for more than 5 seconds, hear a beep, memory location setting successfully.

◆ Lower limit position setting and clearing

The factory default maximum rotation Angle of the TV stand is 75°, you can set a bottom limit within this Angle range, adjust to the required lower limit position with the remote control, open the back cover of the remote control, press the "P1" key, hear the buzzer, the lower limit position is set.

To delete the lower limit position, hold down "P1" for 3 seconds and release the key after hearing the buzzer. The lower limit position is deleted successfully

◆ Remote control Code Pairing and Clearing

Code Pairing: The TV stand is powered on, and within 10 seconds of hearing the buzzer, press the "∧" and " ∨ " keys of the remote control at the same time, and hear the buzzer prompt tone, the remote control code is successfully matched

Code Clearing: The TV stand is powered on, and within 10 seconds of hearing the buzzer, press the "∧" and " ∨ " keys of the remote control at the same time, and then press the "down" key after hearing the prompt tone, the buzzer will ring for a long time, and the remote control will delete the code successfully

◆ Restore factory setting and Reset

Press and hold the "P1" button of the remote control for 6 seconds, release the button when you hear the second prompt tone, the recovery is complete.
Press the "up" button, the TV bracket slowly rises, and emits an interval prompt tone, when the TV bracket rises to the limit position, the buzzer emits a long sound, the reset is completed.

This device complies with part 15 of the FCC Rules. Operation is subject to the following two conditions: (1) this device may not cause harmful interference, and (2) this device must accept any interference received, including interference that may cause undesired operation.
Any changes or modifications not expressly approved by the party responsible for compliance could void the user's authority to operate the equipment.
NOTE: This equipment has been tested and found to comply with the limits for a Class B digital device, pursuant to Part 15 of the FCC Rules. These limits are designed to provide reasonable protection against harmful interference in a residential installation. This equipment generates, uses and can radiate radio frequency energy and, if not installed and used in accordance with the instructions, may cause harmful interference to radio communications. However, there is no guarantee that interference will not occur in a particular installation.
If this equipment does cause harmful interference to radio or television reception,
which can be determined by turning the equipment off and on, the user is encouraged to try to correct the interference by one or more of the following measures:
-- Reorient or relocate the receiving antenna.
-- Increase the separation between the equipment and receiver.
-- Connect the equipment into an outlet on a circuit different from that to which the receiver is connected.
-- Consult the dealer or an experienced radio/TV technician for help.
The device has been evaluated to meet general RF exposure requirement. The device can be used in portable exposure condition without restriction