Electric Fireplace

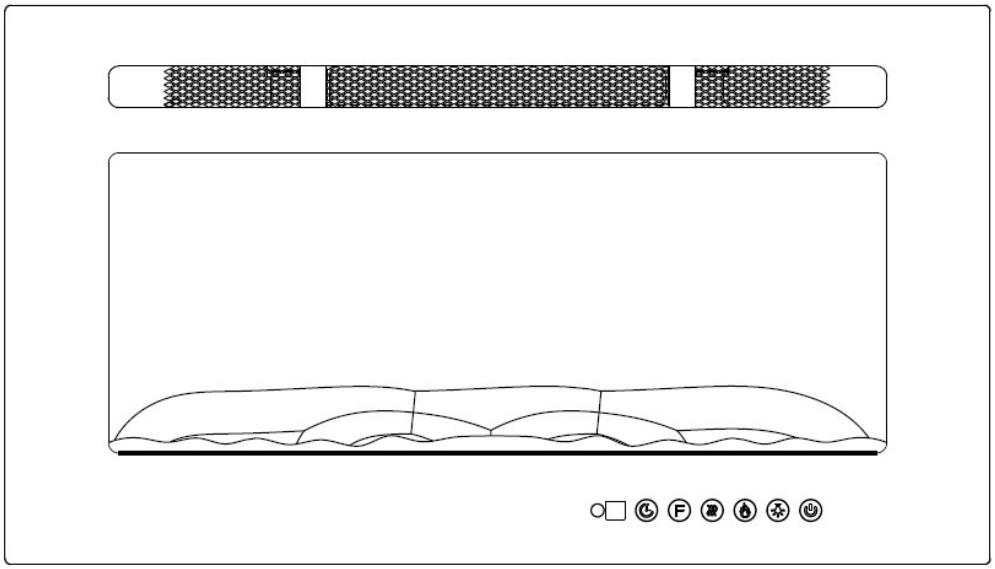

CONSUMER SAFETY INFORMATION

- Read this manual before installing and operating this appliance
- Failure to follow these instructions may result in electric shock, fire property, or personal injury
- Do not store or use gasoline or other flammable liquids in vicinity of this appliance.

C ETL US LISTED

Intertek

IMPORTANT SAFETY INFORMATION!

WARNING

- **Read all instructions before using this heater!**
- This heater is hot **when in use.** To avoid burns, **DO NOT** let bare skin touch hot surfaces. If provided, use handles when moving this heater. Keep **combustible materials,** such as furniture, pillows, bedding, papers, clothes, and curtains at least **3 feet (0.9m**) from the front of **the heater,** and **keep them away from the sides and rear.**
- **Extreme caution** is necessary when any heater is used by or near children or invalids and whenever the heater is left **operating and unattended.**
- **DO NOT** operate any heater with a **damaged cord or plug** or after the **heater malfunctions,** has been **dropped** or **damaged in any manner,** Discard heater, or return to authorized service facility for examination and /or repair.
- **DO NOT** run power cord under carpeting. **DO NOT** cover power cord with throw rugs, runners, or similar coverings. **DO NOT** route power cord under furniture or appliances. Arrange power cord away from **traffic area,** and where it will not be tripped over.

WARNING

- **Connect to properly grounded outlets ONLY.**
- **DO NOT** insert or allow foreign objects to **enter any ventilation or exhaust openings,** as this may cause **electric shock** or **fire,** or **damage the heater.**
- To prevent a possible fire, **DO NOT** block air intakes or exhaust in any manner. Doing so could cause a fire. **DO NOT** use on soft surfaces, like a bed, where openings may become blocked.
- A heater has **hot and arcing or sparking parts inside. DO NOT** use it in areas where **gasoline, paint, or flammable liquids** are used or stored.
- **Use this heater only as described in this manual. Any other use not recommended by the manufacturer may cause fire, electric shock, or injury to persons.**
- **ALWAYS plug heaters directly into a wall outlet/receptacle. Never use with an extension cord or reloadable power tap (outlet/power strip).**
- **DO NOT** place the heater near a bed because objects such as pillows or blankets can fall off the bed and be ignited by the heater.
- **NEVER** use this heater in **bathrooms, laundry rooms,** or any other location where the heater could fall into a **bathtub** or **pool, become damp** or **come in contact with water.**
- **AVOID FIRE!** Regularly inspect all air vents to make sure they are free from dust, lint, or other

  Blockage.**Unplug the unit** and clean with a **vacuum ONLY. DO NOT** rinse or get wet.
- **ALWAYS** mount to wall bracket before use. DO NOT set on the floor, or other surface, to use.
- **NEVER** use a wall mount bracket from another manufacturer.

- This product is **not intended** to be a **primary heat source**. It is for **supplemental heat only.**
- **INDOOR use only! NEVER** use this heater **outdoors!** Doing so may result in **electric shock!**
- **Risk of electric shock**! **DO NOT OPEN!** No user-serviceable parts inside!
- **ALWAYS** turn this heater off before unplugging it from the outlet.
- **ALWAYS disconnect** this unit from the **power** supply **before** performing any assembly or cleaning, or before relocating the electric fireplace.
- **NEVER** leave this heater unattended. **ALWAYS** unplug this heater when not in use.
- **ALWAYS** store this heater in a dry location. **NEVER** use the fireplace if it has become wet.
- **NEVER** plug this heater into an outlet that is **old, cracked,** or has any **loose wires or connections**. Plugging this heater into a faulty outlet could result in **electric arcing** within the outlet that could cause the **outlet** to **overheat or catch fire**.
- **ALWAYS** check your heater cord and plug connections with **each use**!
  - i) **MAKE SURE** the plug fits tight in the outlet! Faulty wall outlet connections or loose plugs can cause the outlet to overheat.
  - ii) **Heaters draw more current** than small appliances. **Overheating** may occur even if it has not occurred with the use of other appliances.
  - iii) During use **check frequently** to see if the **plug outlet or face plate** is **HOT**!
  - iv) If the outlet or face plate is **HOT, discontinue use immediately** and have a qualified electrician inspect and/or replace the faulty outlets.

- The power cord supplied with the heater has a plug with two flat blades (live and neutral) and one round pin (ground). If a 3-slot receptacle is not available, an adapter **MUST** be used. The adapter **MUST** be **properly grounded** to the outlet box (see figure at right).(Note: Adapter NOT INCLUDED.)
- **SAVE THESE INSTRUCTIONS!**

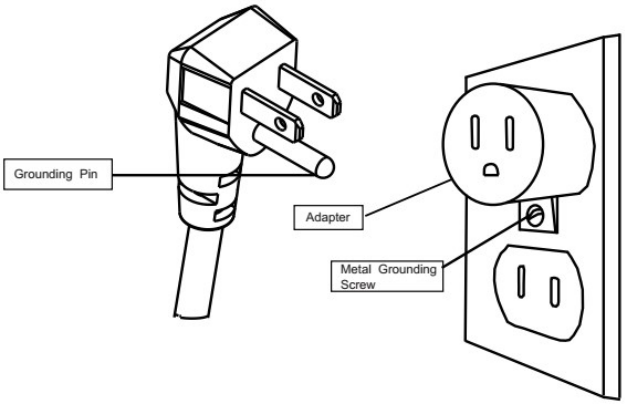

PREPARATION

This product includes a **GLASS panel!** Always use **extreme caution** when handing **glass.** Failure to do so could result in **personal injury or property damage.**

Remove all parts and hardware from the carton and place them on a clean, soft, dry surface. Parts and assembly steps are grounded for wall-hanging or recessing use. Check the parts list to make sure nothing is missing. Dispose of packaging materials properly. Please recycle whenever possible. You will need the following tools (not included): Phillips screwdriver; stud finder; level; tape measure; electric drill; 1/4" wood drill bit, hammer.

PARTS & HARDWARE

Fireplace	Wood Screws		Drywall anchors
	Remote control	Wall Bracket Fixed on back of firebox	Log set
Decorative Crystals	Leg		

Specification and Dimension

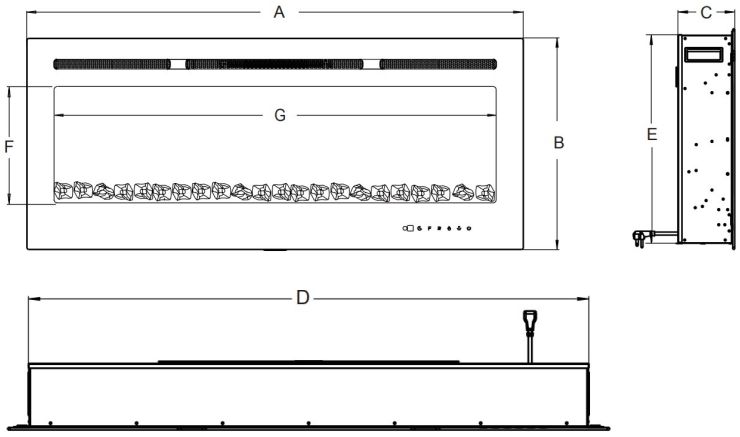

PRODUCT DIMENSIONS

Model Number	A	B	C	D	E	F	G
IF-1336	36.00” 914.5cm	17.00” 43.2cm	4.06” 10.3cm	32.15” 81.68cm	16.22” 41.19cm	9.13” 23.2cm	29.7” 75.44cm
IF-1340	40” 101.6cm	17.0” 43.2cm	4.13” 10.5cm	36.2” 91.8cm	16.2” 41.2cm	9.1” 23.2cm	33.7” 85.6cm
IF-1350	50” 127.0cm	17.0” 43.2cm	4.13” 10.5cm	46.2” 117.3cm	16.2” 41.2cm	9.1” 23.2cm	43.7” 111.0cm
IF-1360	60” 152.4cm	17.0” 43.2cm	4.13” 10.5cm	56.2” 142.7cm	16.2” 41.2cm	9.1” 23.2cm	53.7” 136.4cm

Installation and Assembly

Your appliance is a wall-mounted, recessed and /or mantel installed appliance. Select a suitable location that is not susceptible to moisture and is away from drapes, furniture and high traffic areas.

NOTE: Follow all National and local electrical codes.

MINIMUM CLEARANCE TO COMBUSTIBLES

Measurements are taken from the glass front.			
Bottom	**0"**	**Top**	**11.8"(300mm) to mantel**
Sides	**0"**	**Top**	**11.8"(300mm) to ceiling**
Back	**0"**		

MINUMUM MANTEL CLEARANCES

WARNING

WHEN USING PAINT OR LACQUER TO FINISH THE MANTEL, THE PAINT OR LACQUER MUST BE HEAT RESISTANT TO PREVENT DISCOLOURATION

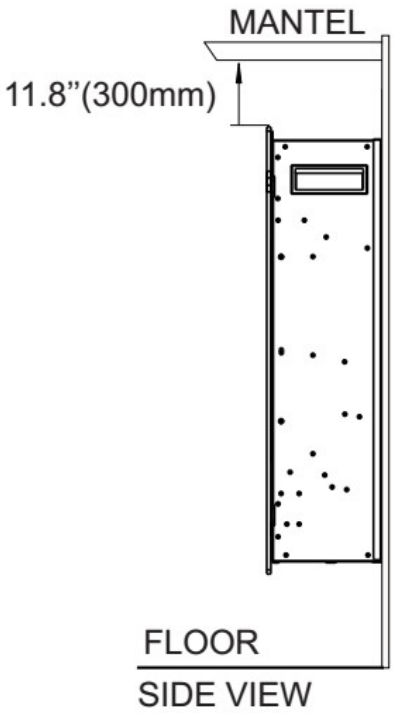

RECESSED TO WALL INSTALLATION

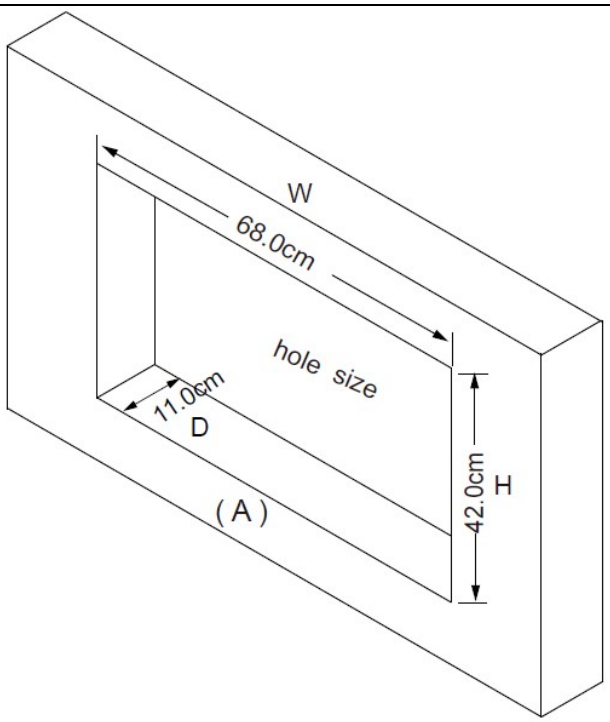

Figure (A) Framing Hole Size

STEP A. Selection a dry wall to open a hole for fireplace box. Size of hole as below chat **Figure (A)**

Framing Hole Size		
Model Number	**W**	**H**
IF-1336	**32.77"(83.2cm)**	**16.54"(42.0cm)**
IF-1340	**36.77"(93.4cm)**	**16.54"(42.0cm)**
IF-1350	**46.77"(118.8cm)**	**16.54"(42.0cm)**
IF-1360	**56.77"(144.2cm)**	**16.54"(42.0cm)**

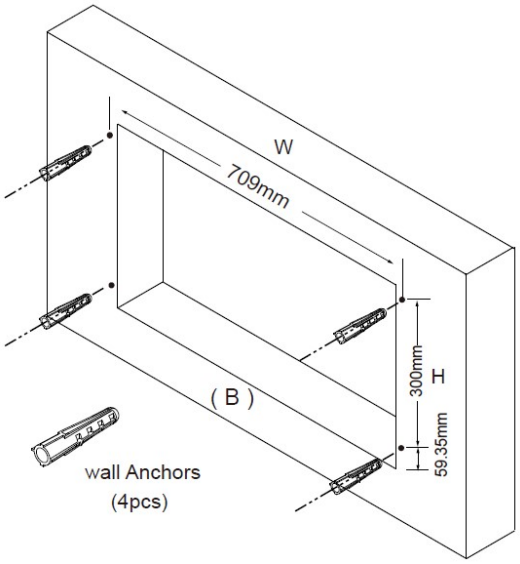

IF-1330

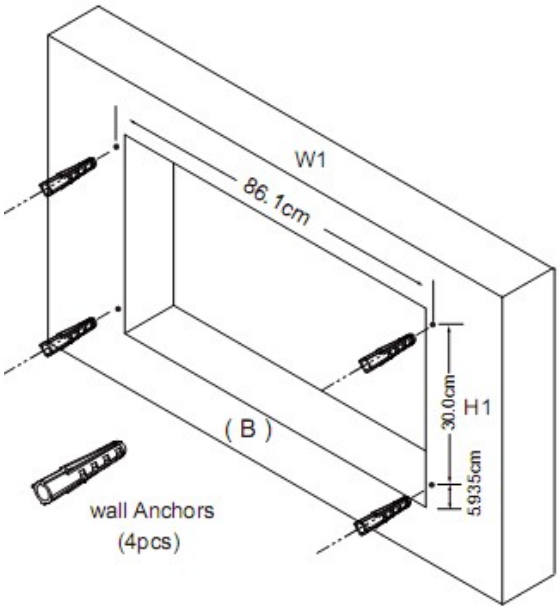

IF-1336

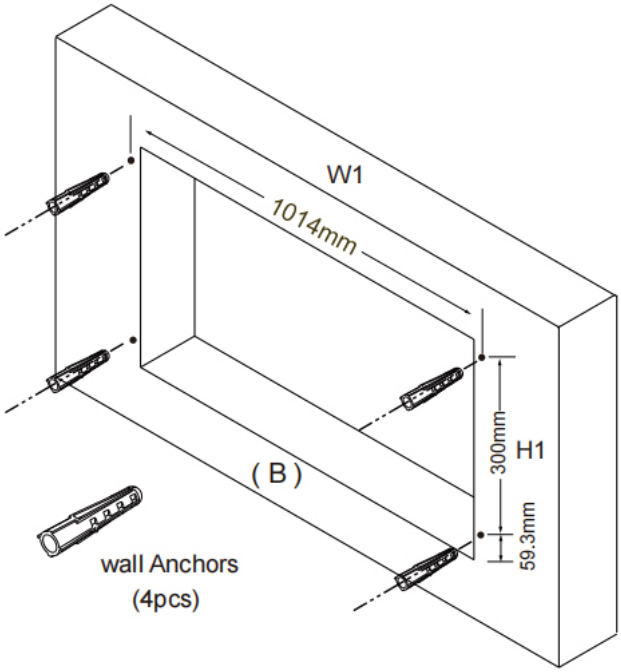

IF-1340

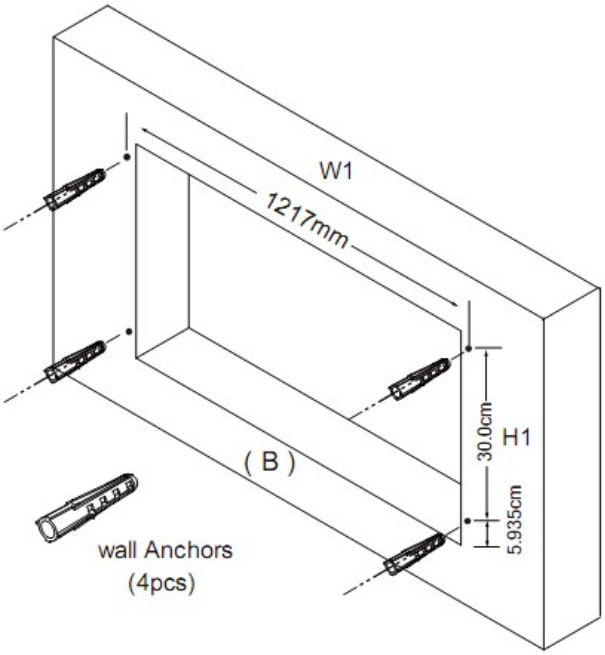

IF-1350

Figure (B)

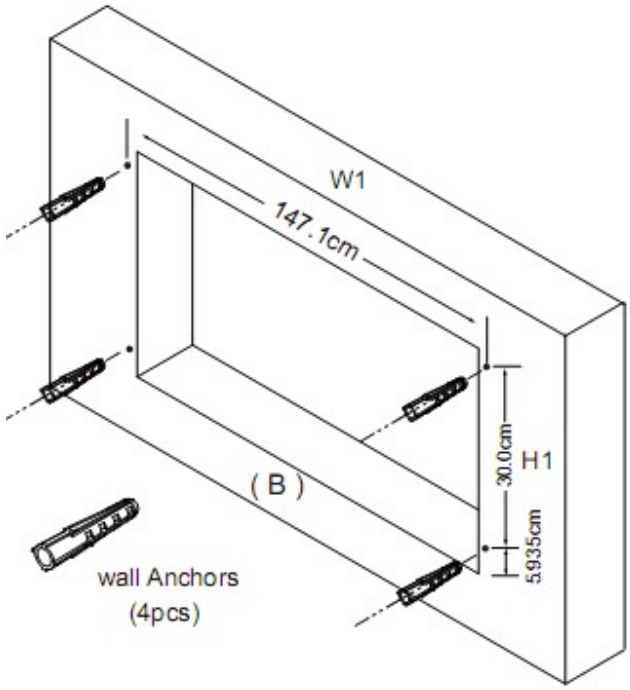

IF-1360

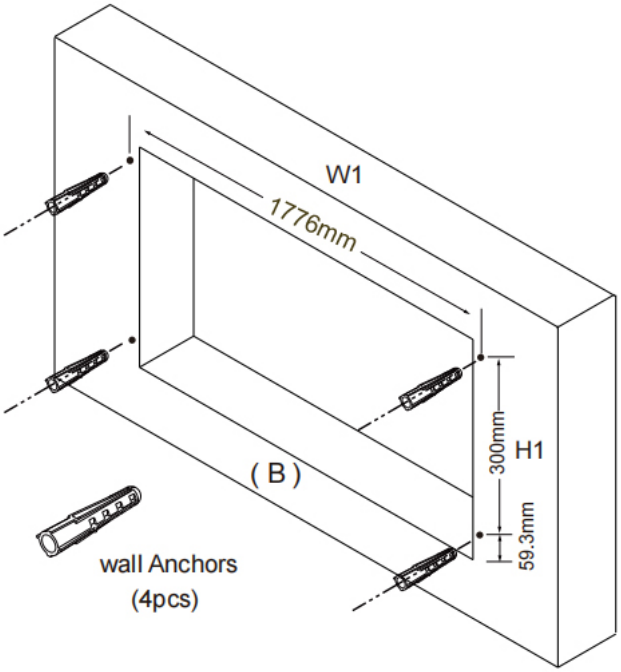

IF-1370

STEP B. Fix the four wall anchors in each side of the fireplace box according to the dimensions Showed on the drawing. **Figure (B)**

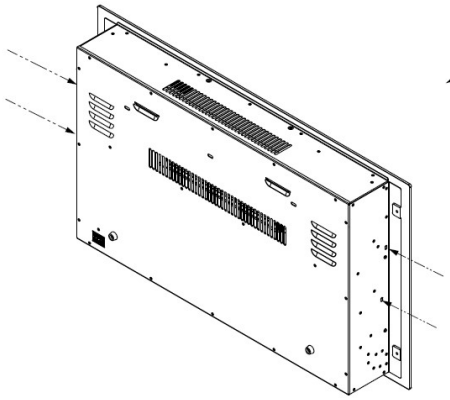

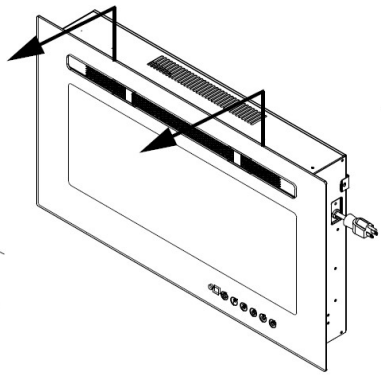

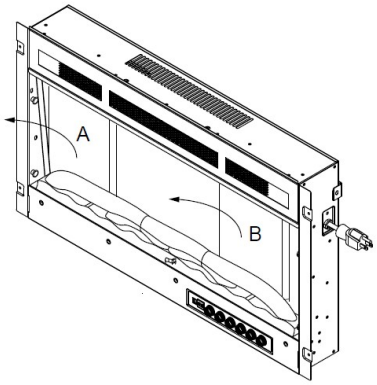

(C) (D) (E)

STEP C. Take off the two screws in both sides of fireplace. Figure (C)

STEP D. Have two person to take the glass panel out of the fireplace box. Place it to a soft and clean place. **Figure (D)** , takes two pcs of foam out of fireplace(E).

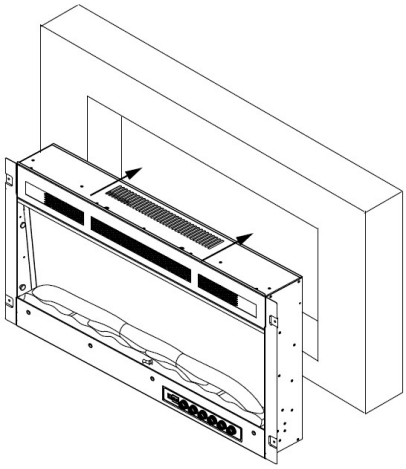

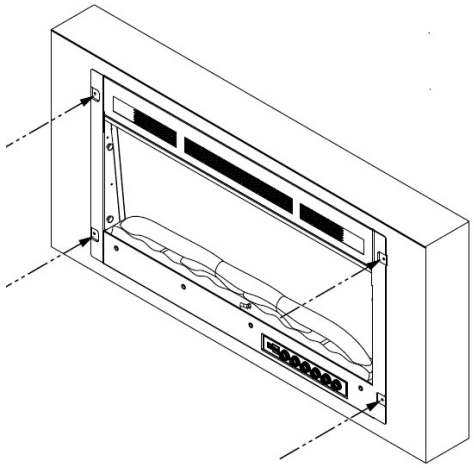

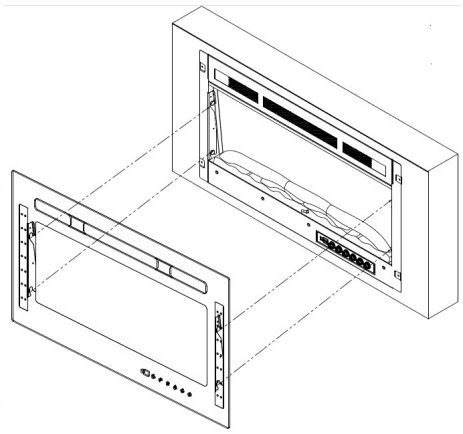

('F) (G) (H)

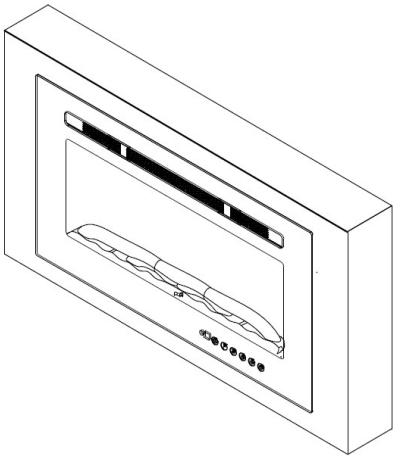

(I)

STEP E. Have two person to move the fireplace box to the wall hole or fireplace mantel (F).

If the appliance is fully recessed into the wall:

- Use the 4 screws(provided) to lock the appliance into wall with the existing two side flanges, **see Figure(G)**
- Install the media and re-install the glass front.

STEP F. Place the front panel locks the appliance. **See Figure (H)**

STEP G. Fireplace will be like this after installation **Figure (I)**

Wall Mounted Installation

Due to the many different materials used on different walls, it is highly recommended that you consult your local builder before you install this appliance on the wall.

A. Select a location that is not prone to moisture and is located at least 36"(914mm) away from combustible materials such as curtain drapes, furniture, bedding, paper, etc.

B. Have two people hold the appliance against the wall to determine the final location.

C. Place unit face down on a soft, nonabrasive surface. Remove the bracket from the back of the unit by removing the screws, refer to Figure 1. Remove four pcs of silver screws at both sides, refer to Figure 2.

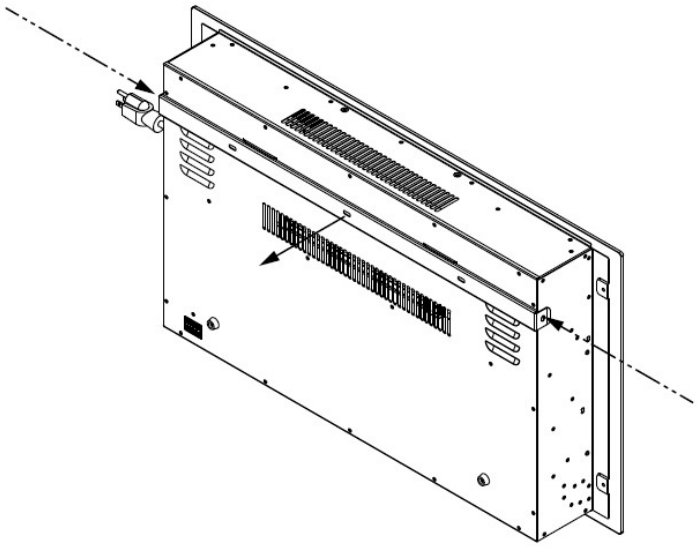

Fig.1

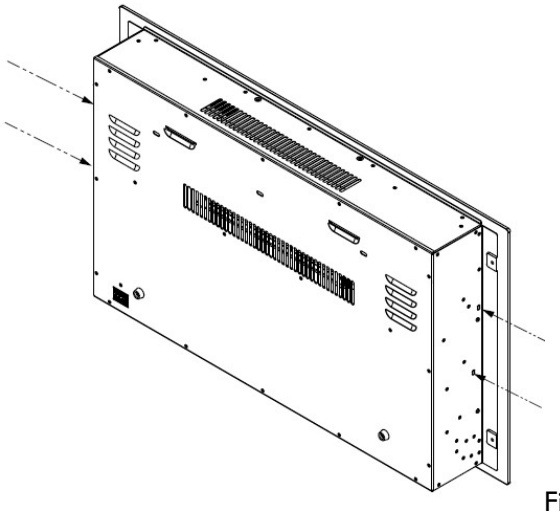

Fig.2

D. Take glass off carefully, and then take two pcs of foam out of fireplace.

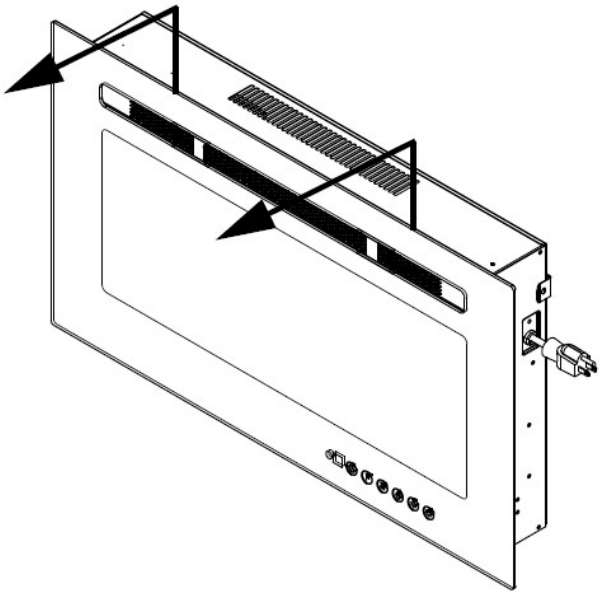

Fig.3

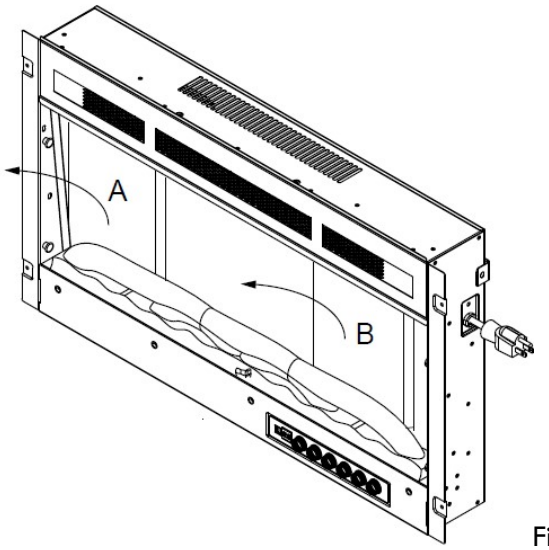

Fig.4

E. Mark out location, and then mount the bracket(s) onto the wall using the supplied screws. This bracket MUST have the hooks facing upward and be level.

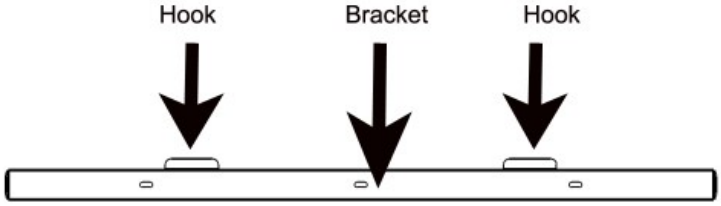

NOTE: It is strongly Recommended that the mounting bracket (d) be screwed into the wall studs where possible. If the wall studs cannot be used, ensure that the supplied plastic anchors are used to affix the bracket to the wall and the bracket is adequately secured.

F. With the wall mounting bracket installed have two people lift the appliance up and insert the two hooks on the bracket into the two slots on the back of the appliance. Use original 4x8mm screws to fasten wall bracket.

G. Check the appliance for stability ensuring that the bracket will not pull free from the wall.

H. Place the front panel lock the appliance.Fig.7

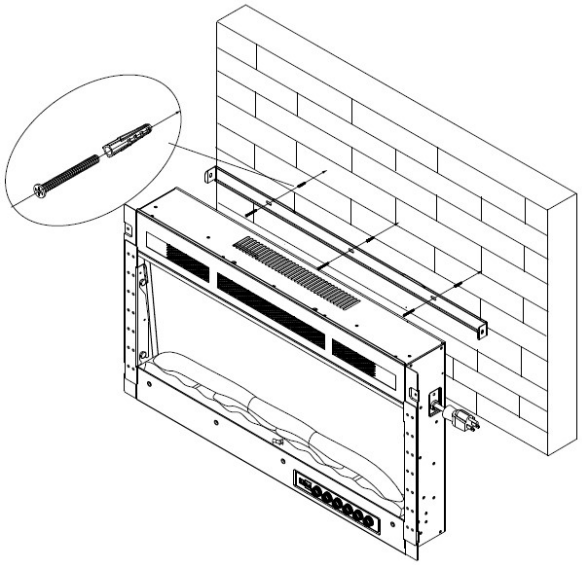

Fig.5

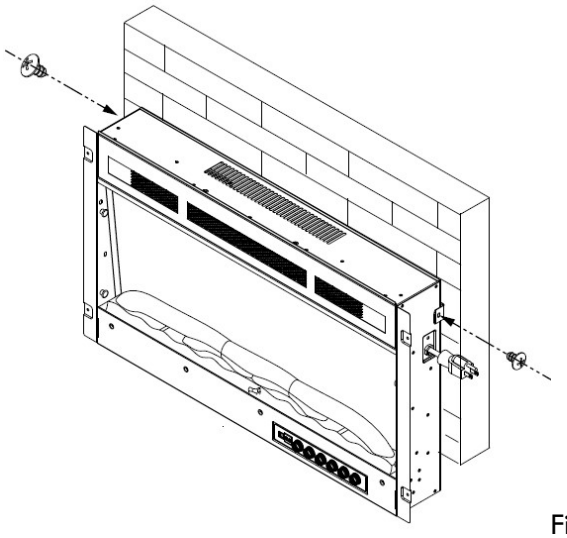

Fig.6

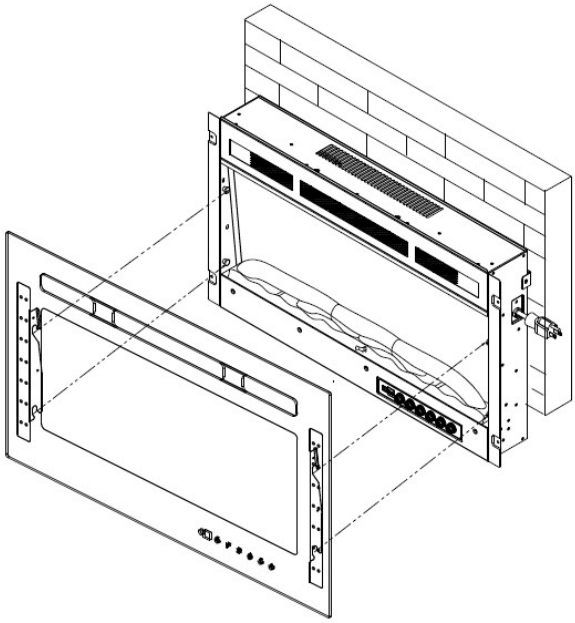

Fig.7

Free Standing Option

- Lay the heater on the floor or a table
- Install the base with 6pcs screws (screws is on the bottom of the fireplace) as provided Figure

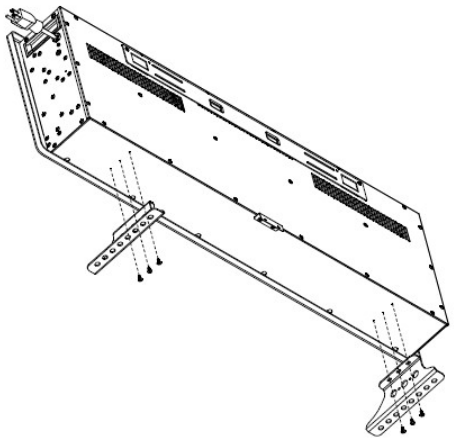

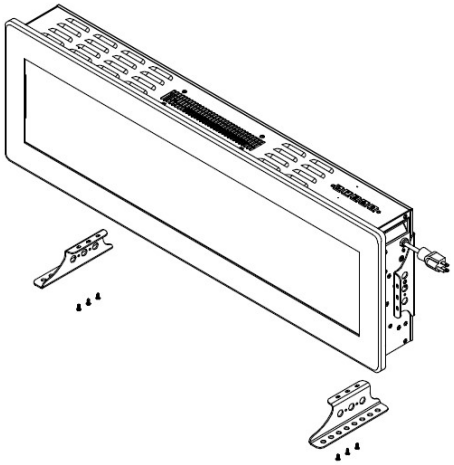

Logset /Crystal Ember Installation

(Note: Please make the installation according to the embers which you bought or selected.)

A. Glass front must be removed and the appliance must be mounted in its final location before the logset/crystal embers are installed.
B. If your fireplace comes with logset, remove the logset from the package, put it to the fireplace designed place. Figure 1.
C. If your fireplace comes with CLEAN CRYSTAL MEDIA: crystal may have a fine oil residue that needs to be cleaned prior to installation. Clean them with mild dish soap, drain, rinse thoroughly and dry before placing into the tray.
D. Then carefully place crystal embers into the bottom tray on the front of the appliance as illustrated. Apply an even layer from side to side. Figure 2.

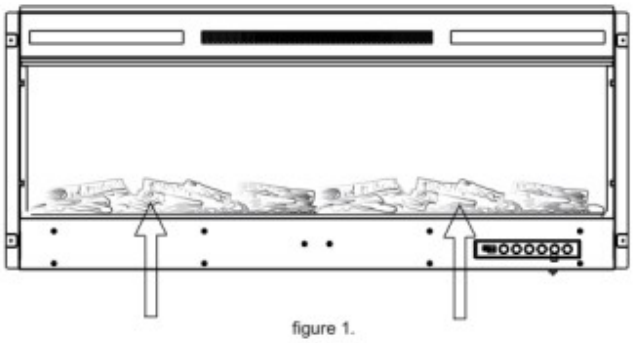

figure 1.

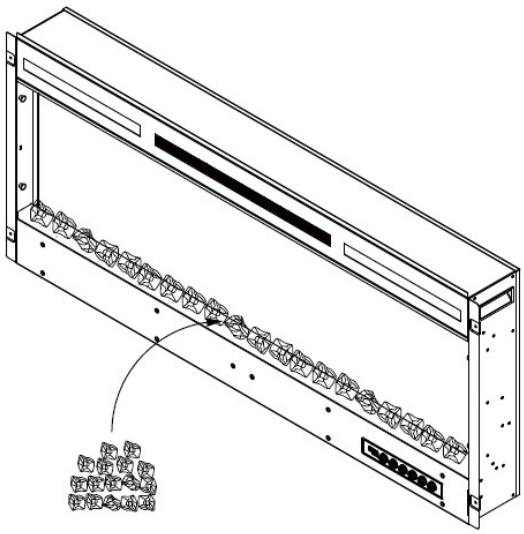

Figure 2.(Crystal medias)

WARNING

Read and understand this entire owner's manual, including all safety information, before plugging in or using this product. Failure do to so could result in electric shock, fire, serious injury, or death.

Power

Plug the power cord into a 110-120V Volt 12 Amp grounded outlet (see IMPORTANT SAFETY INFORMATION on Pages 2 and 3).Make sure the outlet is in good condition and that the plug is not loose. NEVER exceed the maximum amperage for the circuit. DO NOT plug other appliances into the same circuit.

Methods of Operation

This electric fireplace can be operated by the TOUCH PANEL, located on the BOTTOM right side glass panel of the fireplace, or by the battery-powered REMOTE CONTROL.
The operation and functions of the two methods are the same.

Before operating, please review the IMPORTANT SAFETY INFORMATION on Pages 2 and 3, and heed all warnings.

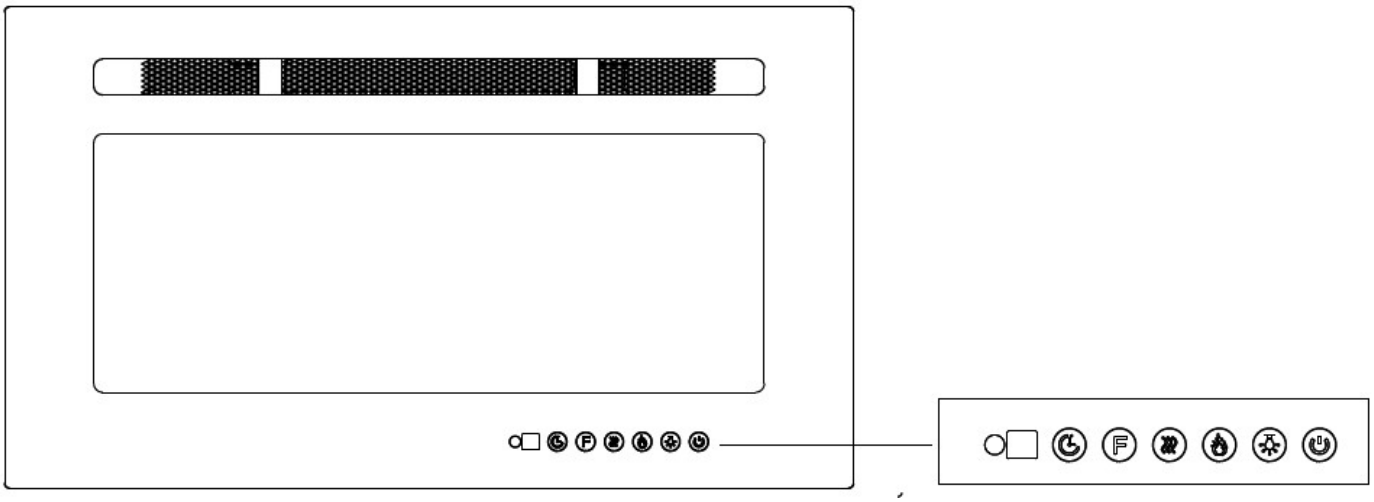

Touch panel/Remote control Operation

BUTTON	FUNCTION	ACTION&INDICATION
POWER	ON: Enables control panel functions and remote control. Turn on flame effect. OFF: Disables control panel functions and remote control. Turn off flame effect.	1. Press once. Indicator light turns on. Power turns on. All functions enabled. 2. Press again. Indicator light turns off. Power turns on. All functions will off.
COLOR	EMBER COLOR button: Makes the ember bed color effect changing. NOTE: Keep pressing for 3 seconds to make ember bed effect dimmer and brighter	3. Press once. Ember bed color effect gets changing.(12 colors) 4. Press again until desired setting is reached. 5. When set the color to F0, the ember bed color will automatic changing
FLAME	FLAME button: Makes the flame color effect changing. NOTE: Keep pressing for 3 seconds to make flame effect dimmer and brighter	1. Press once. Flame color effect gets changing. 2. Press again. Until desired setting is reached. 3. When set the color to C0, the flame color will automatic changing
HEATER	HEATER button: Turn heater on and off. NOTE: To prevent overheating, the heater fan will blow out cool air for 30 seconds after the heater turn off.	1. Press once. Indicator lights up. 750W heater turns on and blows warm air. 2. Press again. Indicator lights up. 1500W heaters turn on and blow hot air. 3. Press again. Heaters turn off . The display show "00" The fan blows cool air for 30 seconds to allow heater to cool down, then turns off.
TEMP.	TEMPERATURE button: Control temperature settings to choose temperature as desired. Setting range from 62F to 82F.	1. Press once. Indicator light turns on. Temperature is set to 62F. 2. Press again until desired setting is reached. LED display show setting.
TIMER	TIMER button: Control timer settings to turn off fireplace at selected time. Settings range from 0 hours,1hours, to 8 hours.	3. Press once. Indicator light turns on. Temperature is set to hours. Press again until desired setting is reached. LED display show setting.

NOTICE	When the heater is first turned on, a slight odor may be odor may be present. This is normal and should not occur again unless the heater is not used for a long period of time.
NOTICE	To improve operation, aim the remote control at the front of the fireplace. DO NOT press the buttons too quickly.Give the unit time to respond to each command.

Temperature Limiting Control

This heater is equipped with a Temperature Limiting Control. Should the heater reach an unsafe temperature, the heater will automatically turn OFF. To reset:

1. Unplug the power cord from the outlet.
2. Turn the ON/OFF switch on the CONTROL PANEL to OFF. Wait 5 minutes.
3. Inspect the fireplace to make sure no vents are blocked, or clogged with dust or lint. If they are, Use a vacuum to clean the vent areas.
4. With the POWER switch in the OFF position, plug the power cord back into the outlet.
5. If the problem continues, have your outlet and wiring inspected by a professional.

Remote Control Battery Information

- With 2x AAA batteries.

NEVER dispose of batteries in fire. Failure to observe this precaution may result in an explosion. Dispose of batteries at your local hazardous material processing center.

CARE AND MAINTENANCE

Cleaning

ALWAYS turn the heater **OFF** and **unplug the power cord from the outlet** before cleaning, performing maintenance, or moving this fireplace. Failure to do so could result in **electric shock, fire, or personal injury.**

NEVER immerse in water or spray with water. Doing so could result in electric shock, fire, or personal injury.

Metal:

- Buff using a soft cloth, slightly dampened with a citrus oil-based product.
- **DO NOT** use brass polish or household cleaners as these products will damage the metal trim.

Glass:

- Use a good quality glass cleaner and dry thoroughly with a paper towel or lint-free cloth.
- **NEVER** use abrasive cleansers, liquid sprays, or any cleaner that could scratch the surface.

Vents:

- Use a vacuum or duster to remove dust and dirt from the heater and vent areas.
- Clean the exterior of the fireplace with a slightly damp cloth or duster.

Maintenance

Risk of electric shock! DO NOT OPEN! No user-serviceable parts inside!

ALWAYS turn the heater **OFF** and **unplug the power cord from the outlet** before cleaning, performing maintenance, or moving this fireplace. Failure to do so could result in **electric shock, fire, or personal injury.**

Electrical and Moving Parts:

- The fan motors are lubricated at the factory and will not require lubrication.
- Electrical components are integrated in the fireplace and are not serviceable by the consumer.

Storage:

- Store heater in a clean dry place when not in use.

WARNING! No other servicing should be performed by the consumer. Do not attempt to service the unit yourself.

Troubleshooting

⚠ WARNING

DISCONNECTED THE APPLIANCE COMPLETELY AND LET COOL PRIOR TO ANY SERVICE.

ONLY A QUALIFIED SEVICE PERSON SHOULD SERVICE AND PEPAIR THIS ELECTRIC APPLAINCE.

Problem	**Possible Cause**	**Solution**
1. Fireplace turns off and will not turn on.	1. Fireplace has overheated and safety devise has caused thermal switch to disconnect or home circuit breaker has opened.	1. Reset switch by turning main power off and waiting turning it back on or breaker circuit breaker.
2. Flame is not moving.	1. Loose wiring. 2. Flame motor defective. 3. Flame rod out of place	1. Inspect wiring for loose connections. 2. Call a qualified service technician to replace flame motor. 3. "Flame Rod" out of place due to rough transit/handing of the product. This issue can be corrected as simple as removing the glass, flipping the fireplace upside and down, removing a set of screws that are holding the bottom frame plate and placing the flame rod back into place.
3. Flame is not visible.	1. Wiring is loose	1. Disconnect from power source and inspect wiring for loose connections and repair or replace if necessary. 2. Push the flame button to high
4. Log set and /or is not glowing.	1. Wiring is loose 2. Ember is off mode	1. Disconnect from power source and inspect wiring for loose connections and repair or replace if necessary.
5. Remote control does not work.	1. Low batteries. 2. Not aiming control correctly. 3. Defective remote control and /or sensor	1. Replace batteries in remote control. 2. Aim control at sensor located directly behind glass screen in center of unit just above logs. 3. Replace remote control and/or sensor.

For Both FCC & IC application:

This device complies with Part 15 of the FCC Rules / Industry Canada licence-exempt RSS standard(s). Operation is subject to the following two conditions: (1) this device may not cause harmful interference, and (2) this device must accept any interference received, including interference that may cause undesired operation.

Le présent appareil est conforme aux CNR d'Industrie Canada applicables aux appareils radio exempts de licence. L'exploitation est autorisée aux deux conditions suivantes : (1) l'appareil ne doit pas produire de brouillage, et (2) l'utilisateur de l'appareil doit accepter tout brouillage radioélectrique subi, même si le brouillage est susceptible d'en compromettre le fonctionnement.

Changes or modifications not expressly approved by the party responsible for compliance could void the user's authority to operate the equipment.

This equipment has been tested and found to comply with the limits for a Class B digital device, pursuant to part 15 of the FCC Rules. These limits are designed to provide reasonable protection against harmful interference in a residential installation. This equipment generates uses and can radiate radio frequency energy and, if not installed and used in accordance with the instructions, may cause harmful interference to radio communications. However, there is no guarantee that interference will not occur in a particular installation. If this equipment does cause harmful interference to radio or television reception, which can be determined by turning the equipment off and on, the user is encouraged to try to correct the interference by one or more of the following measures:
—Reorient or relocate the receiving antenna.
—Increase the separation between the equipment and receiver.
—Connect the equipment into an outlet on a circuit different from that to which the receiver is connected.
—Consult the dealer or an experienced radio/TV technician for help.

MPE Requirements
To satisfy FCC / IC RF exposure requirements, a separation distance of 20 cm or more should be maintained between the antenna of this device and persons during device operation.
To ensure compliance, operations at closer than this distance is not recommended.

Les antennes installées doivent être situées de facon à ce que la population ne puisse y être exposée à une distance de moin de 20 cm. Installer les antennes de facon à ce que le personnel ne puisse approcher à 20 cm ou moins de la position centrale de l' antenne.
La FCC des éltats-unis stipule que cet appareil doit être en tout temps éloigné d'au moins 20 cm des personnes pendant son functionnement.

MADE IN CHINA