PORTABLE PA SYSTEMS

WITH USB, BLUETOOTH
Remote Control & VHF + wired mics

REF:

PORT8VHF-BT / PORT10VHF-BT
PORT12VHF-BT / PORT15VHF-BT

MANUAL

PORT8VHF-BT / PORT10VHF-BT:

ACCESSORIES: 1x handheld VHF mic + 1 wired mic + 1 remote control + 1 protection bag (only black version)

ACCESSOIRES: 1 micro à main VHF + 1 micro filaire + 1 télécommande + 1 housse de protection (uniquement version noire)

ZUBEHÖR: 1 VHF Handmikrofon + 1 Kabelmikrofon + 1 Fernbedienung + 1 Schutzhülle (nur schwarze Modelle)

TOEBEHOREN: 1 VHF handmicrofoon + 1 kabelmicrofoon + 1 afstandsbediening + 1 beschermhoes (alléén zwarte modellen)

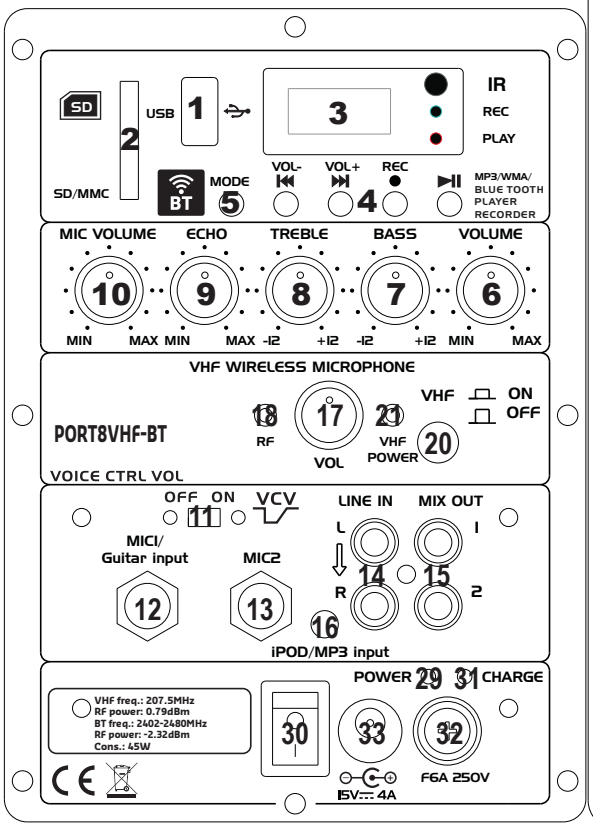

PORT8VHF-BT

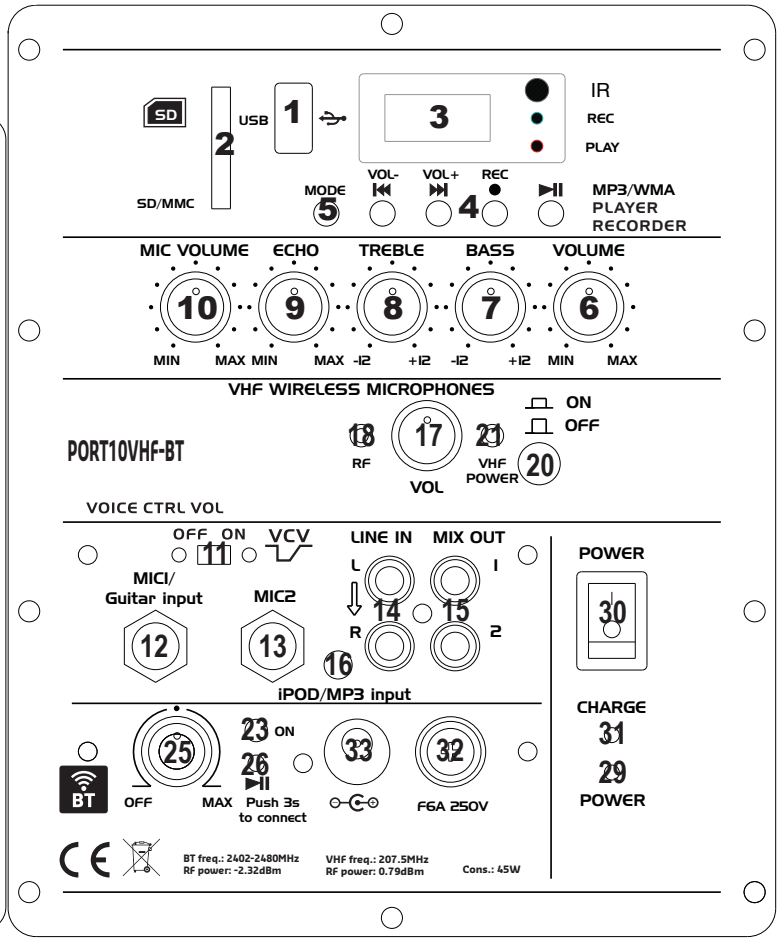

PORT10VHF-BT

PORT12VHF-BT / PORT15VHF-BT:

ACCESSORIES: 1x handheld VHF mic + 1 headset mic + 1 remote control + 1 protection bag (only black version)

ACCESSOIRES: 1 micro à main VHF + 1 micro de tête + 1 télécommande + 1 housse de protection (uniquement version noire)

ZUBEHÖR: 1 VHF Handmikrofon + 1 Headset-Mikro + 1 Fernbedienung + 1 Schutzhülle (nur schwarze Modelle)

TOEBEHOREN: 1 VHF handmicrofoon + 1 headset microfoon + 1 afstandsbediening + 1 beschermhoes (alléén zwarte modellen)

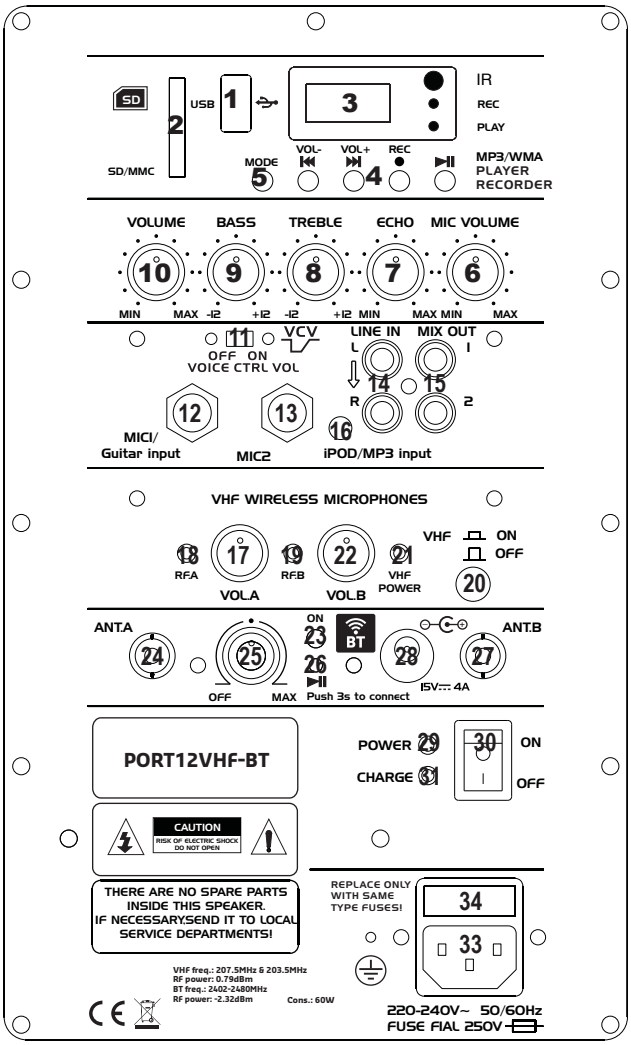

PORT12VHF-BT

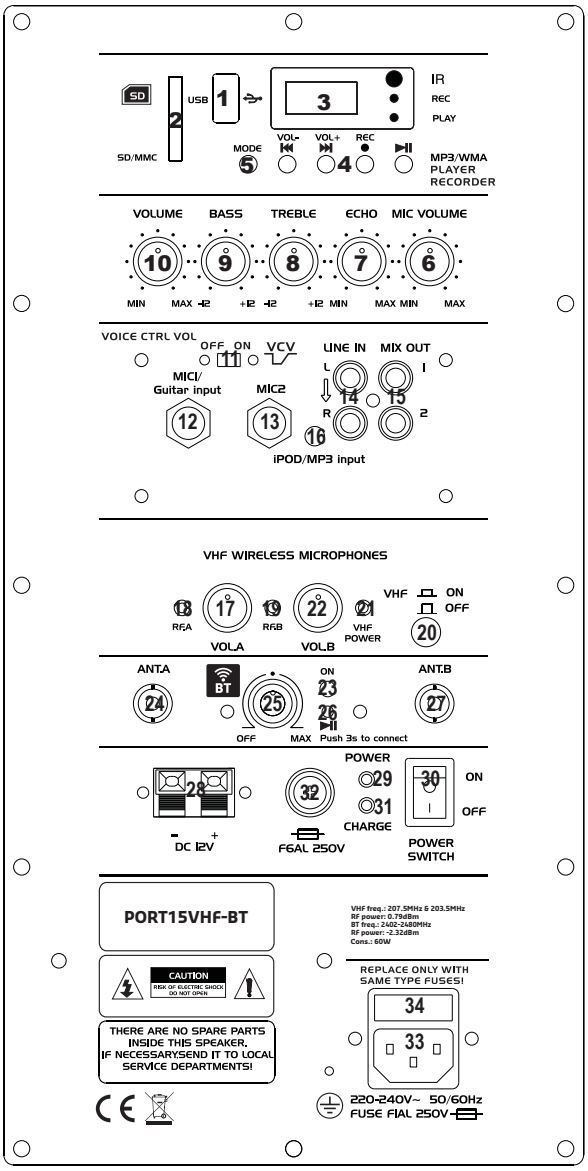

PORT15VHF-BT

PORTABLE PA SYSTEMS

WITH USB, BLUETOOTH, REMOTE CONTROL & VHF + WIRED MICS

INSTRUCTION MANUAL

IMPORTANT SAFETY INSTRUCTIONS AND DANGER WARNINGS

- Please read the manual carefully and keep it for future reference.
- All safety instructions and warnings must be adhered to. They are part of the manual and must be kept with the manual.
- Any guarantee claims are rendered invalid if damage occurs due to non-observance of these operating instructions. We assume no liability for any consequent damage.
- We assume no liability for personal injury or damage to property caused by incorrect handling or non-observance of the safety instructions. Any guarantee claims expire in such cases.
- Unauthorized conversions and/or modifications of the appliance are not permitted for safety and licensing reasons (CE).
- The appliance is approved for operation in dry, closed rooms only ⌂. Do not operate the device nearby water, such as in bathrooms or nearby swimming pools.
- The appliance may not be exposed to extreme temperatures (< +5°C / > +35°C) in operation.
- The appliance may not be subjected to strong vibrations or heavy mechanical strain.
- The appliance may not be exposed to excessive moisture (due to dripping or sprayed water, for example).
- Do not place any recipients filled with liquids, such as glasses or vases, on top of or directly next to the appliance. They could fall over, causing water to enter the appliance. Never pour out liquids above the appliance. Do not place any small objects, such as coins or paper clips, on the appliance since they could fall inside the appliance. You run a high risk of causing a fire or life-threatening electrocution! If any liquid or objects enter the appliance nevertheless, pull the mains plug out of the socket immediately and contact a specialist.
- Only pull the mains plug out of the socket by the intended gripping surface. Do not pull it by the cable.
- Never plug the mains plug in or out with damp or wet hands.
- Always pull the mains plug out of the mains socket:
  Before cleaning the appliance
  If there is a thunderstorm
  If you will not be using the appliance for a long period of time (>1 week)
- Electrical appliances must be kept out of the reach of children. Be particularly careful if children are present. Children are not aware of the hazards involved in handing electrical appliances improperly. Children could attempt to poke objects into the appliance. There is a life-threatening danger of electrocution.
- Do not leave the appliance unattended while operating it.
- Never place the appliance on an unstable or movable surface. Persons could be injured or the appliance damaged by it falling down.
- When using a rack, make sure it is in a stable position and is transported securely. Installation on uneven, slanted surfaces or stopping the rack abruptly during transport can result in the rack overturning or appliances falling from or out of the rack and injuring people.
- Live components can be exposed by opening covers or removing components (unless this can be done without tools). Contact points can also be live. If the appliance has to be opened in order to calibrate, service, repair or replace components or assemblies, all of its poles must be disconnected from all sources of voltage first. If the appliance has to be kept open and under voltage during maintenance or repairs, this work may only be carried out by a specialist who is familiar with the risks involved and the relevant regulations.
- Never connect the appliance directly after transferring it from a cold to a warm room. The condensation water that forms could destroy the appliance or result in an electric shock. Allow the device to reach room temperature before connecting it. Wait until the condensation water has evaporated. This can take some hours.
- Do not place any naked flames such as those of burning candles on or next to the appliance.
- Do not place the appliance on soft surfaces such as carpets or beds. Do not cover the air vents of the appliance. Do not obstruct the air circulation with objects such as magazines, table cloths or curtains. This prevents the dissipation of heat from the appliance and can result in overheating.

- Only use the appliance in a moderate climate, not in tropical environments.
- All persons involved in operating, installing and servicing the appliance and putting it into service must be trained and qualified accordingly and observe these operating instructions.
- Defective mains cables may only be replaced by specialists. Danger of shock hazard!
- Do not leave the packaging material lying around carelessly since it can become a source of danger for children playing with it.
- The accident prevention regulations and the regulations of the employers' liability insurance association should be observed at commercial institutions.
- If you are not sure about the correct connection or if questions arise which are not answered by the operating instructions, please do not hesitate to contact support or a specialist of your choice. Consult a specialist if you are in doubt the operating principle or the safety of the product.

RESTRICTIONS OF USE

This product uses a VHF transmission system that is meant for professional use only.

It may only be used in some countries of the European Union (F – B – P – D – NL – L – GR – E – RO).

CAUTION
DO NOT OPEN THE HOUSING
SHOCK HAZARD

POWER SUPPLY: BATTERY & AC OPERATION

Built-in rechargeable battery and AC power. Prior to using this system for the first time, please insert the AC lead into the AC socket of the player and plug the other end on a suitable wall outlet. Make sure that the "CHARGE INDICATOR" is ON 14 hours continuously.

PORT8VHF-BT & PORT10VHF-BT: Insert the supplied mains adaptor into the DC input socket (33) and the other end into a suitable wall outlet.

PORT12VHF-BT & PORT15VHF-BT: Insert the AC lead into the AC socket (33) on the rear panel and the other end into a suitable wall outlet.

Please charge the battery when the LED indicator (31) lights up in red. During the charging process, the LED indicator lights up in orange. It lights up in green when the battery is fully charged.

NOTE: Please shut down the power switch after you have finished using the system.

IMPORTANT NOTE ON BATTERIES

1. PRIOR TO USING THE UNIT FOR THE FIRST TIME, PLEASE CHARGE FULLY THE BATTERY WITHOUT ANY INTERRUPTION.
2. CHARGE THE BATTERY REGULARLY AFTER EACH USE. DON'T WAIT UNTIL IT IS DISCHARGED!
3. DON'T ALLOW THE BATTERY TO DISCHARGE COMPLETELY! Once the battery is fully discharged, the current drain for recharging will be so high that it will damage the charger and/or the power supply of the unit.
4. If you don't use the unit for a longer period of time, please CHARGE THE BATTERY COMPLETELY AT 100% and check/charge it once per month otherwise the battery will be out of use.
The life time of the battery depends on the observance of these recommendations.

**** BATTERIES ARE NOT COVERED BY THE WARRANTY ****
WE CANNOT BE HELD RESPONSIBLE FOR DAMAGED BATTERIES FURTHER TO THE NON-OBSERVANCE OF THESE BASIC RULES.

PORT12VHF-BT & PORT15VHF-BT ONLY

These models have a DC input (28) on the rear panel which allows the user to power the unit via an external battery or car lighter socket in case that there is no mains power supply at hand and the built-in battery is exhausted or unsufficiently charged. This input **does not allow to charge** the built-in battery.

NO	PORT8VHF-BT	PORT10VHF-BT	PORT12VHF-BT	PORT15VHF-BT
1	USB input			
2	SD card slot			
3	MP3 display			
4	MP3 controls			
5	Input selector switch			
6	Master volume control			
7	Bass control			
8	Treble control			
9	Echo control			
10	Volume control wired MIC inputs			
11	Voice control (VOX) on/off switch			
12	Input for wired mic 1 or guitar			
13	Input for wired mic 2			
14	Line level input			
15	Output to a mixer or amplifier			
16	iPod/MP3 input connector			
17	Volume control VHF mic A			
18	Signal indicator channel A			
19			Signal indicator channel B	
20	VHF ON/OFF switch			
21	VHF Power LED			
22			Volume control VHF mic B	
23		Bluetooth pairing LED red & blue		
24			Antenna A connector	
25		Bluetooth On/Off/ volume control		
26		Pairing button		
27			Antenna B connector	
28			DC power supply input	
29	Power LED			
30	ON/OFF switch			
31	Charge indicator			
32	DC Fuse compartment	DC Fuse compartment		DC Fuse compartment
33			Mains input	
34			AC fuse compartment	

PLAY MP3/WMA MUSIC

1. Switch power source to ON. The LED indicator (29) lights up in green.
2. Insert a USB stick (1) or an SD card (2) into the relevant input
3. Select USB via the MODE button (5)
4. Select a title via the ⏮ or ⏭ buttons and press ►II (4)

PLAY LINE IN MUSIC

1. Insert an RCA plug into the LINE IN sockets (14)
2. If LINE is not displayed by default, press the MODE button (5) until LINE is displayed.
3. If you want to sing along to the music, insert a wired microphone into MIC INPUT (12 or 13) or switch on the wireless mic function (20) and the switch on the wireless microphone. Set the volume of the wired mic via the MIC VOL control (10). Set the volume of the wireless mic via the button (17 or 22 (only PORT10&12VHF-BT))
4. Adjust the volume control (6) of the line source.

USE OF THE VOX FUNCTION

When VOX function is enabled, the music level will decrease when somebody talks into one of the microphones. The music level becomes normal when the user stops talking into the microphone.

To activate this function, switch the VCV switch (11) to on. If you want to disable this function, set this switch to off position

RECORD FUNCTION (REC)

1. To start the recording function, press the RECORD button (4).
2. A file is created on your USB stick or SD card.
3. To stop recording, press the RECORD button again.
4. To listen to your record, select the track on the SD card or USB stick.

Note: Only the sound of the microphone (s) can be recorded, no other sound source.

BLUETOOTH PAIRING PROCEDURE FOR PORT8VHF-BT

1. Press the MODE button (5) until BLUETOOTH is displayed. The BLUETOOTH function is now activated.
2. Activate the Bluetooth function on your smartphone or another tablet PC.
3. The product appears under the name «IBIZA-PORT» and can be connected to your equipment.
4. Now play your music through the portable sound system. Adjust the volume using the Master volume button (6).
5. Do not set the volume of your smartphone or tablet PC too high. Do not exceed ¾ of the total volume to avoid distortion.

BLUETOOTH PAIRING PROCEDURE FOR PORT10/12/15VHF-BT

1. Switch on the Bluetooth function via the rotary knob (25). The Bluetooth LED (23) will light up
2. Activate the Bluetooth connect function of your device
3. Press button ▸ II (26) until the LED (23) is flashing
4. Select IBIZA-PORT in the list of found devices
5. You are ready to play your music

USE OF THE VHF MICS

Activate the VHF function by pressing the VHF switch (20) down to ON position. Switch on the VHF microphone via the switch on the mic body. The RF.A (18) or RF.B (19) signal indicator will light up when the box receives the VHF signal from the microphone. Adjust the volume via the VHF mic volume controls (17 and/or 22 (only PORT12 / 15VHF-BT)).

REMOTE CONTROL

1. ON/OFF button

2. MODE: Press until the desired operating mode is displayed

3. MUTE: Sound stop

4. ⏮: back to the previous track.

5. ⏭: Go to the next track.

6. ▸ II **Play/pause**: Press to play a track, press to pause

7. VOL-: Reduce the volume

8. Vol+: Increase the volume

9. REC

10. Number buttons: Press the number of the desired track

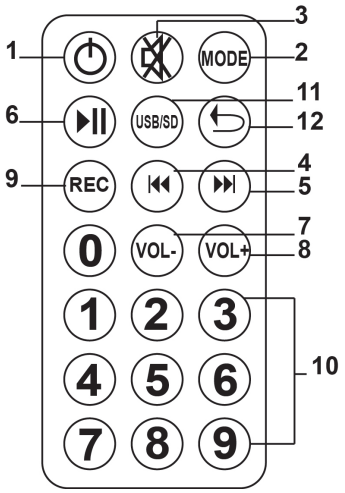

RECOMMENDATIONS FOR BATTERIES

This symbol indicates that used batteries should not be disposed of with household waste but deposited in separate collection points for recycling.

ATTENTION: *Danger of explosion if battery is incorrectly placed. Only replace by the same or equivalent type.*

WARNING: *Do not swallow the battery. Danger of chemical burns.*
(The supplied remote control of) This product contains a button cell. In case of ingestion, it might cause serious internal burns within only 2 hours that might lead to death.
Keep new and old batteries out of the reach of children. If the battery compartment doesn't close properly, stop using the product and keep it out of the reach of children.
If you are in doubt whether the batteries have been swallowed or introduced into any other part of the body, contact immediately a doctor.

Before cleaning the unit, disconnect it from the mains. Do not use aggressive cleaning agents. Use a clean cloth to wipe any dust or dirt from the product. We are not liable for damage arising from incorrect handling, improper use or wear and tear. We reserve the right to make technical changes.

SPECIFICATIONS

	PORT8VHF-BT	PORT10VHF-BT	PORT12VHF-BT	PORT15VHF-BT
Woofer	8"/20cm	10"/25cm	12"/30cm	15"/38cm
Tweeter	1"/25mm compression driver			
Sensitivity	96dB±2dB	98dB±2dB	99dB±2dB	101dB±2dB
Max. SPL	105dB	107dB	109dB	115dB
Impedance	4 Ohms			
Freq. range	60-20,000Hz	55-20,000Hz	45-20,000Hz	40-20,000Hz
Built-in battery	12V/2.3Ah	12V/4.5Ah	12V/4.5Ah	12V/7.2Ah
Bluetooth frequency	2402-2480MHz			
BT max. RF power	-2.32dBm			
VHF handheld mic freq.	207.5MHz	207.5MHz	207.5MHz	207.5MHz
VHF headset mic freq.			203.5MHz	203.5MHz
Max. RF power handheld mic	0.79dBm	0.79dBm	0.79dBm	0.79dBm
Max. RF power headset mic			2.66dBm	
Power supply	15V⎓ 4A		220-240V~ / 50-60Hz	
Dimensions	330x310x490mm	370x360x525mm	400x375x620mm	485x445x728mm
Weight	9.2kg	10.5kg	15kg	19.8kg

This marking indicates that this product should not be disposed with other household wastes throughout the EU. To prevent possible harm to the environment or human health from uncontrolled waste disposal, recycle it responsibly to promote the sustainable reuse of material resources. To return your used device, please use the return and collection systems or contact the retailer where the product was purchased. They can take this product for environmental safe recycling.

FCC Caution.

§15.19 Labelling requirements.
This device complies with part 15 of the FCC Rules. Operation is subject to the following two conditions: (1) This device may not cause harmful interference, and (2) this device must accept any interference received, including interference that may cause undesired operation.

§15.21 Information to user.
Any Changes or modifications not expressly approved by the party responsible for compliance could void the user's authority to operate the equipment.

§15.105 Information to the user.
Note: This equipment has been tested and found to comply with the limits for a Class B digital device, pursuant to part 15 of the FCC Rules. These limits are designed to provide reasonable protection against harmful interference in a residential installation. This equipment generates uses and can radiate radio frequency energy and, if not installed and used in accordance with the instructions, may cause harmful interference to radio communications. However, there is no guarantee that interference will not occur in a particular installation. If this equipment does cause harmful interference to radio or television reception, which can be determined by turning the equipment off and on, the user is encouraged to try to correct the interference by one or more of the following measures:
-Reorient or relocate the receiving antenna.
-Increase the separation between the equipment and receiver.
-Connect the equipment into an outlet on a circuit different from that to which the receiver is connected.
-Consult the dealer or an experienced radio/TV technician for help.