APPROVAL SHEET

CrossAir™ SMD Antenna series
RoHS Compliance

PN: OA-C07

2.4 GHz ISM band antenna

FEATURES

1. Surface Mounted Devices (SMD) with a small dimension of 3.5 X 1.7 X 1.2 mm^3meet miniaturization trend.
2. Low power loss and high antenna efficiency.
3. High stability in Temperature and Humidity Change.

APPLICATIONS

1. 2.4GHz ISM band RF applications
2. Bluetooth,ZigBee, Wireless, HomeRF
3. WIFI（2.4G only）

CONSTRUCTION

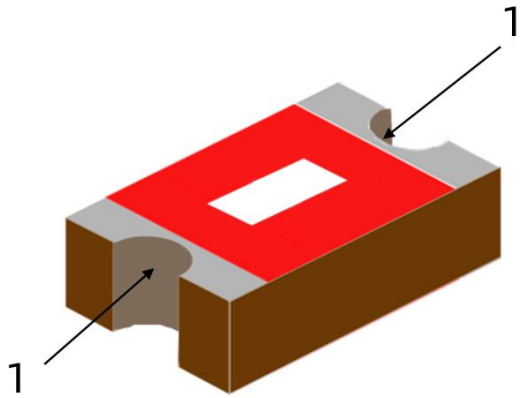

Do not distinguish between feeding pads and fixed pads at both ends of the antenna

DIMENSIONS

Figure	Symbol	Dimension(mm)
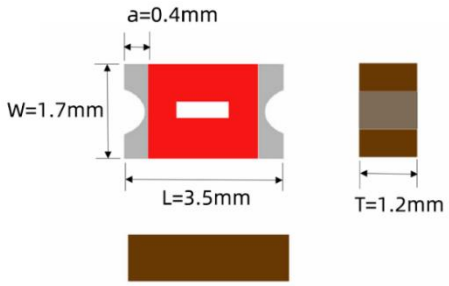	**L**	**3.5**±0.2
	w	**1.7**±0.1
	T	**1.2**±0.1
	a	**0.4**±0.1

ELECTRICAL CHARACTERISTICS

OA-C07	Specification
Working Frequency	2450±50MHz
Band Width	>100MHz
Impedance	50Ω
Gain(dBi)	3.74（peak）
VSWR	<2
Operation Temperature	-40℃~+95℃
Power Capacity	3W

The 2.4G operating frequency of the antenna needs to be achieved through impedance matching device debugging.

Antenna pad and wiring design

PCB schematic diagram

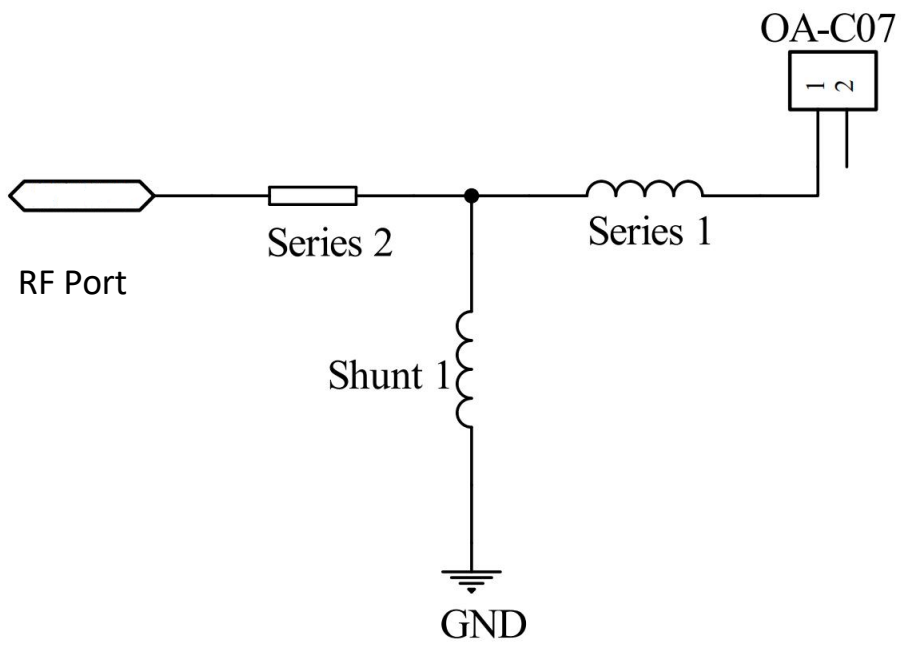

PCB Design

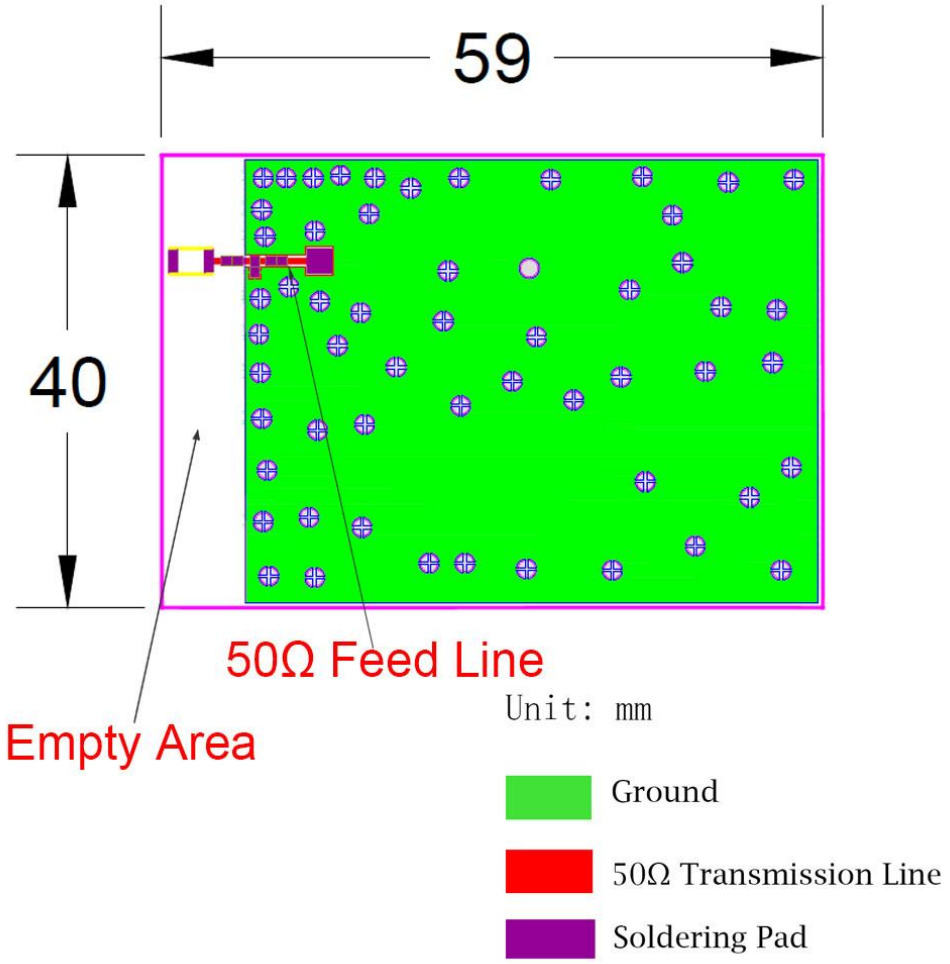

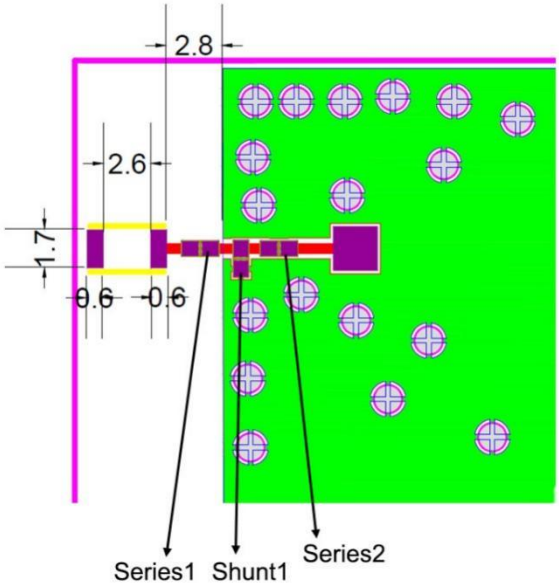

Matching component value	**Series 1**	5.6nh
	Shunt 1	4.7nh
	Series 2	0Ω

Antenna on Test Board (Thickness 1.0mm)

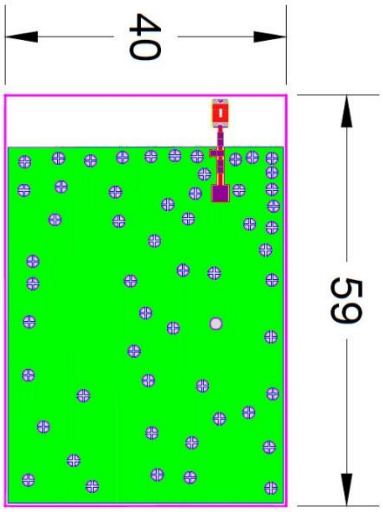

Antenna S11 on Test Board

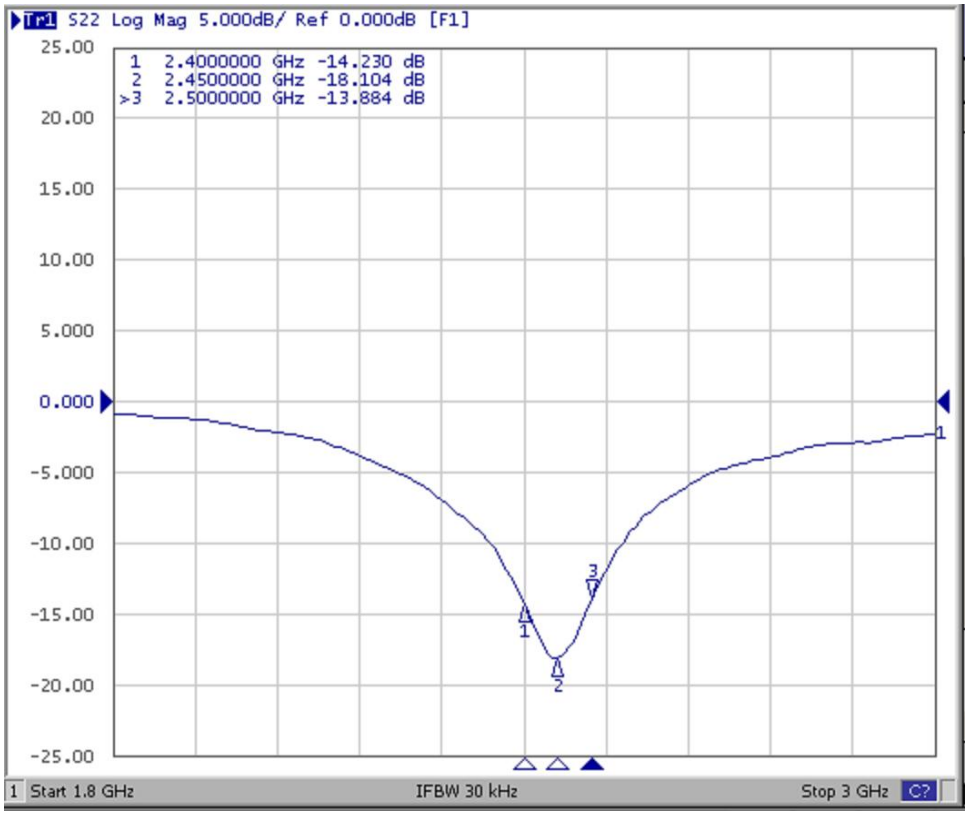

Antenna VSWR on Test Board

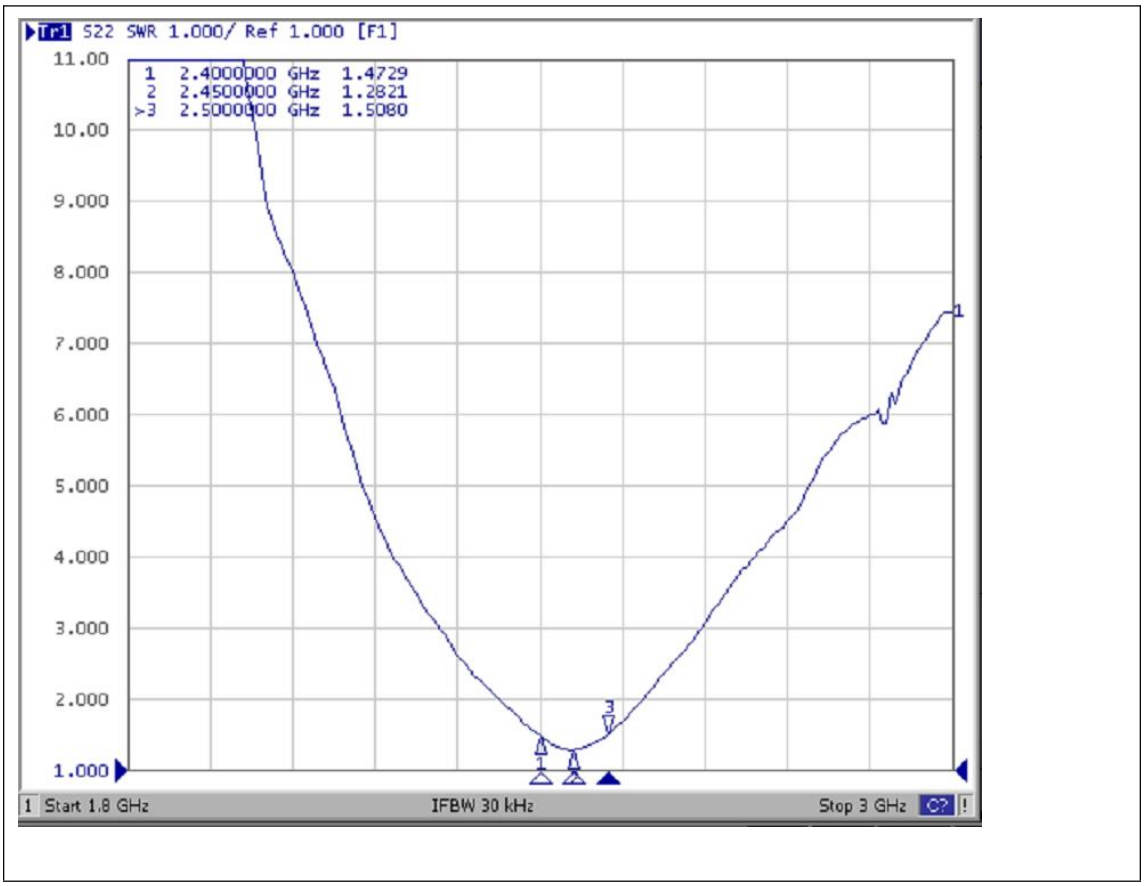

Efficiency and RADIATION PATTERN

Efficiency， Radiation Pattern and Gain were dependent on measurement board design. The specification of OA-C07 antenna was measured based on the PCB size and installation position as shown in the below figure test board. The test results were tested in ETS 3D Chamber.

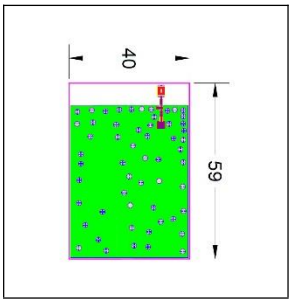

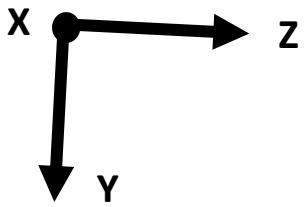

Gain and Efficiency	2.4G-2.5GHz
Peak Gain	3.74dBi
Average Gain across the band	3.66dBi
Gain Range across the band	3.42dBi~3.74dBi
Peak Efficiency	58.9%
Average Efficiency across the band	55.9%
Efficiency Range across the band	53.0%~58.9%

Theta @2.45 GHz	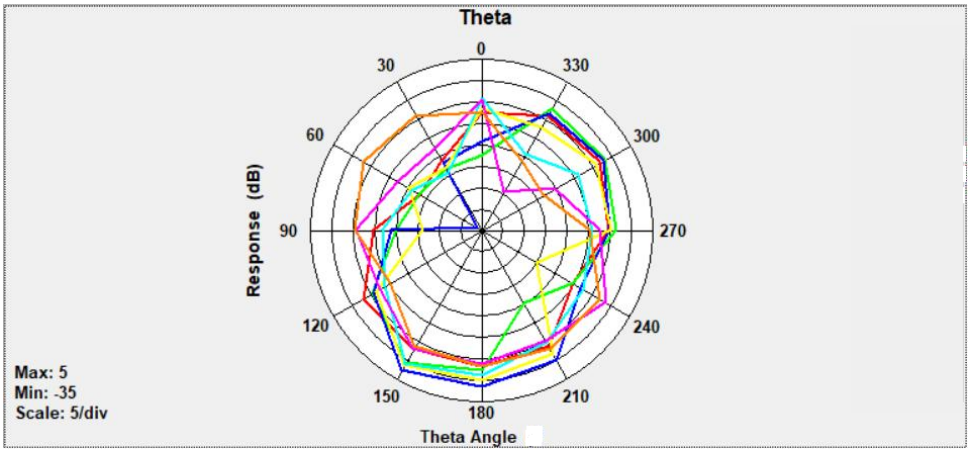
Phi @2.45 GHz	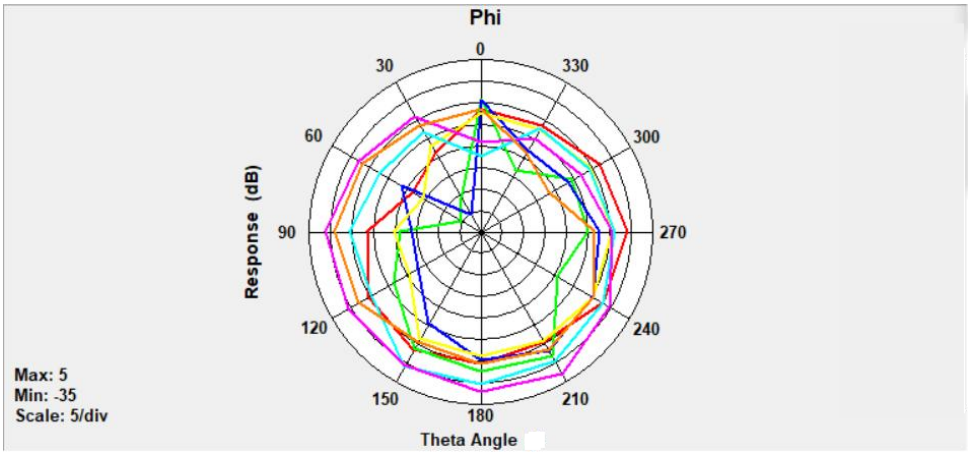
Total @2.45 GHz	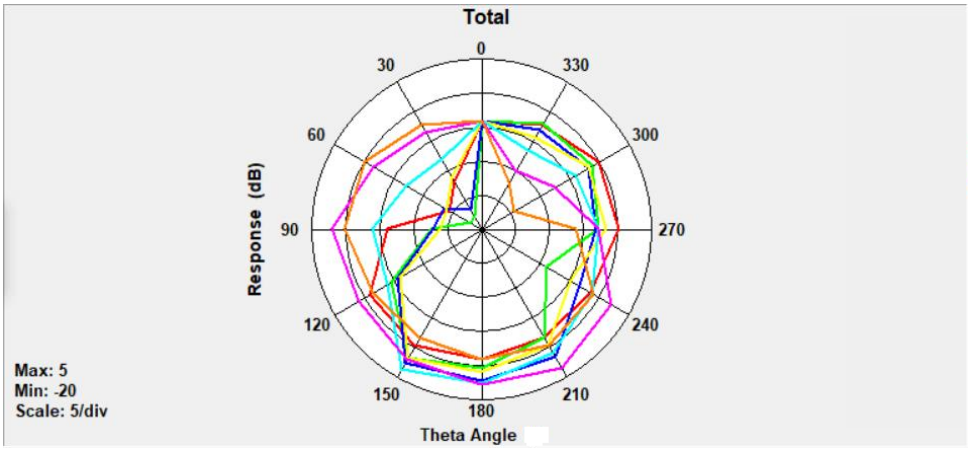

SOLDERING CONDITION

Typical examples of soldering processes that provide reliable joints without any damage is as follows:

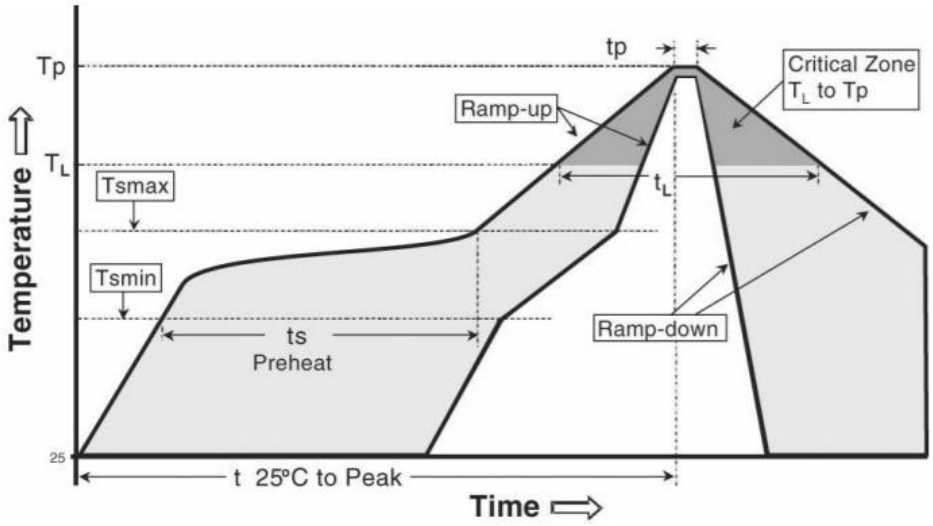

Phase	Profile features	Pb-Free assembly (SnAgCu)
RAMP-UP	Avg. Ramp-up Rate (Tsmax to Tp)	3 °C / second (max.)
PREHEAT	- Temperature Min (Tsmin) - Temperature Max (Tsmax) - Time (tsmin to tsmax)	150 °C 200 °C 60-180 seconds
REFLOW	- Temperature (TL) - Total Time above TL (tL)	217 °C 60-150 seconds
PEAK	- Temperature (Tp) - Time (tp)	260 °C 20-40 seconds
RAMP-DOWN	Rate	6 °C/second max
Time from 25 °C to Peak Temperature		8 minutes max

PACKAGING

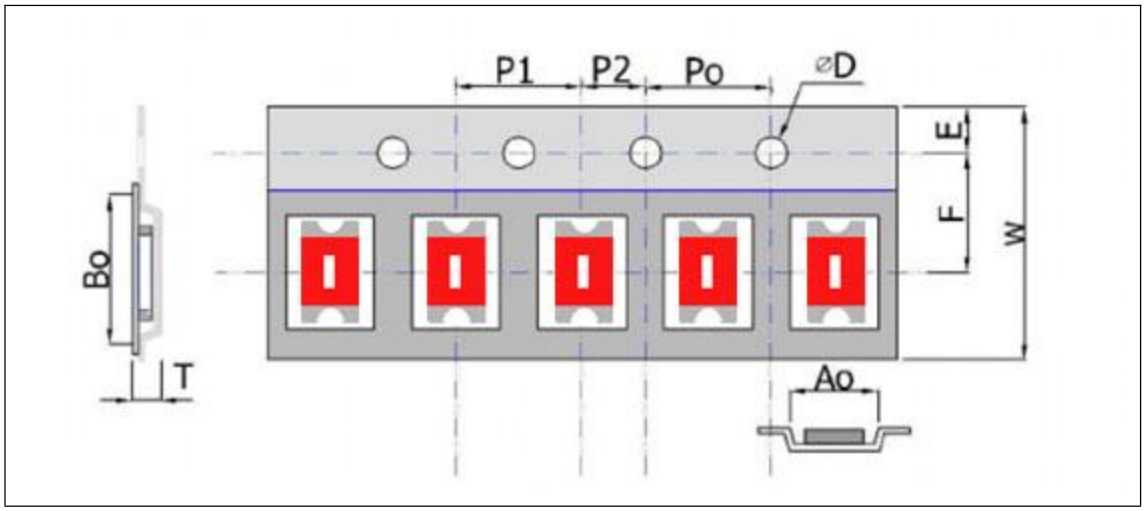

Plastic Tape specification (unit:mm**)**

Index	Ao	Bo	ΦD	T	W
Dimension (mm)	2.0±0.1	4.0±0.1	1.55±0.05	1.8±0.1	12±0.1
Index	E	F	Po	P1	P2
Dimension (mm)	1.5±0.1	5.4±0.1	4.0±0.1	4.0±0.1	2.0±0.1

Reel dimensions

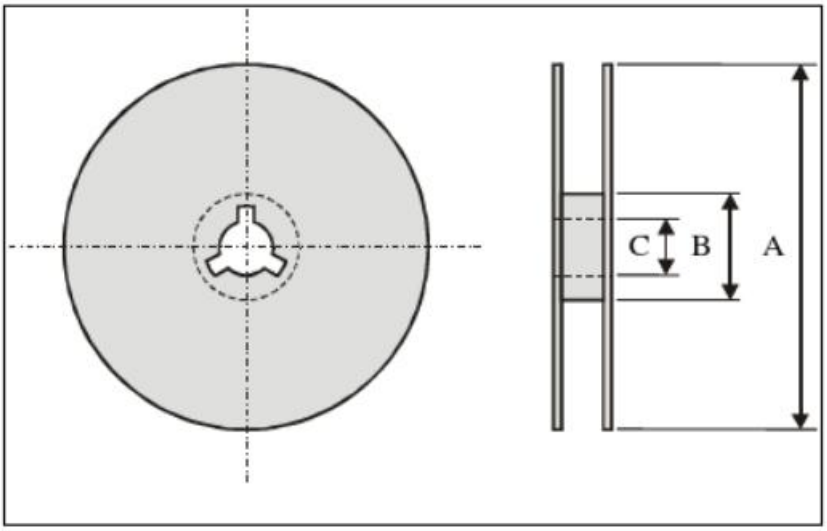

Index	A	B	C
Dimension(mm)	330	100	13.5

Typing Quantity: 3000 pieces per reel.

CAUTION OF HANDLING

Storage environment condition

Products shoud be storage in the warehouse on the following conditions:

Temperature : -10℃~+40℃

Humidity : 30% to 70% relative humidity

Don't keep products in corrosive gases such as sulfur. Chlorine gas or acid or it may cause oxidization of electrode, resulting in poor solderability.

Products should be storage on the palette for the prevention of the influence from humidity, dust and so on.

Products should be storage in the warehouse without heat shock, vibration, direct sunlight and so on.

Products should be storage under the airtight packaged condition.

Company Name: Guangzhou Cambrian Electronic Technology Co.,Ltd

Address: Room 203, No.34, Huanxibei Road, Tianhe District, Guangzhou City, Guangdong Prov.