6- Inclement weather

- Secure all scaffoldings, temporary structures, equipment, and loose materials
- Check and implement SOP to ensure disconnection of gas supplies, electrical circuits and equipment
- Inspect worksites to ensure protection against ingress of water or dust
- Inspect the drainage system for blockages and remove if found
- Stop all outdoor works except for emergency works

7- Ladders

- Only use ladders that meet local safety regulations
- When working at height, it is recommended to use platforms instead of ladders
- If using a platform is not practicable, a supervisor should assess the potential risk and provide safety
- protection equipment for workers
- use non-conductive ladders made of glass-fiber or reinforced plastic when carrying out electrical work
- Assign assistants to provide support when working on ladders
- Check all ladders for broken rungs or other defects before use and periodically
- Fully open stepladders when in use
- Do not overreach when working on a ladder
- Beware of overload restrictions

Country	Standards
USA	ANSI A 14.1, ANSI A 14.2, ANSI A 14.5
Canada	CSA Z11 M81

Intellectual property of EVBOLT, Inc.

8- Working at height

- Avoid working at height by using alternative tools and methods as far as practicable
- It is strongly recommended to build suitable scaffolding or work platforms
- Provide fall arrest systems for workers if it is impracticable to use working platforms
- Secure all materials and tools to prevent them falling from height

9- Lifting operations

- Have lifting gear and apparatus regularly inspected and tested by qualified persons
- Isolate and cordon off lifting areas to keep out non-construction personnel
- Ensure that lifting routes do not cross buildings or people, and avoid collision with objects
- Do not exceed safe working load limits

10- For on-site workers

- Plan all work
- Turn off power (work with live parts de-energized whenever possible)
- LOTO (Lock Out, Tag Out)
- Live electrical work permit (input terminals with HV after door open)
- Use personal protective equipment (PPE)
- Safe workplace conditions and space
- Adhere to other occupational health, safety and security codes, such as those published by OSHA

Intellectual property of EVBOLT, Inc.

8.2 Safety Requirements

- Read this user manual thoroughly and make sure to review all local building and electrical codes before installing the AC charger. A qualified technician should install the AC charger according to the user manual and local safety regulations
- Use appropriate protection when connecting to the main power distribution cable
- Type B, C or D breaker with a rating current of 60Amp should be installed in the upstream AC distribution box
- Disconnect switch for each ungrounded conductor of AC input shall be provided by others in accordance with the National Electric Code, ANSI/ NFPA 70
- Verify that the Wall Connector is properly grounded. The ground connection must be bonded in the upstream power supply for proper operation. Check all physical connections, including the wire box terminals, electrical panel(s), and wire box. In residential power supplies, check the bond between ground and neutral at the main panel. If connected to a step- down transformer, contact the transformer's manufacturer for direction on how to bond the ground connection

Intellectual property of EVBOLT, Inc.

8.3 Packing List

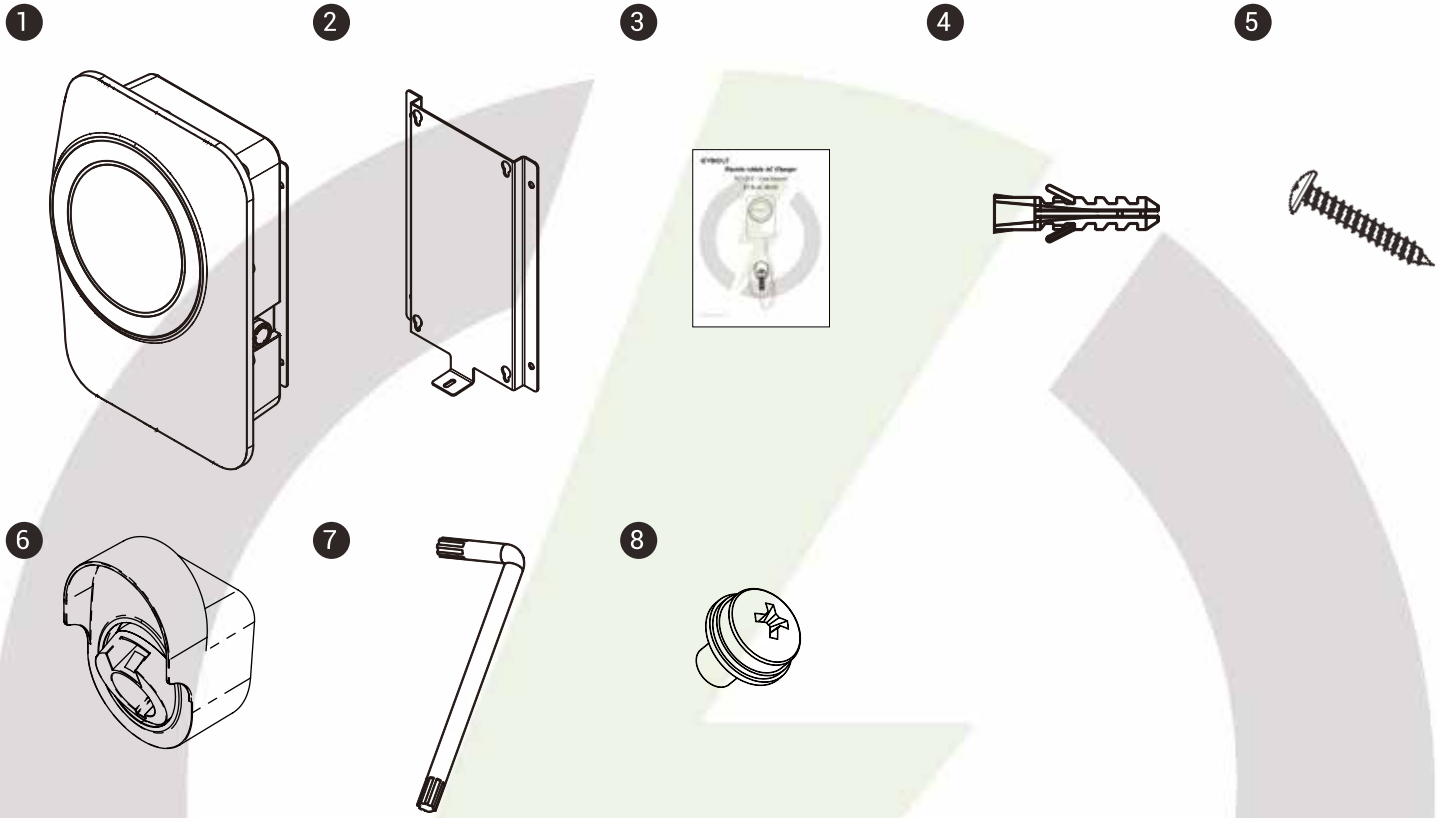

No.	Product Name	Qty	Notes
1	AC Charger (With Charging Cable)	1	
2	Wall-Mount Bracket	1	
3	User Manual	1	
4	Expansion Screws	8	
5	M5 Self-Tapping Screws	8	
6	Holster	1	
7	Torx/T30 L-Wrench	1	
8	M4 Screw	1	

Intellectual property of EVBOLT, Inc.

8.4 Tools and Materials Required

Tools required before installing the charger onto the Wall-Mount Bracket are:

- Wire stripper
- Phillips screwdriver for M4 – M6 1-3/8 inch or 6 mm drill diameter
- Voltmeter or digital multimeter (for measuring AC voltage at the installation site)
- The inserting cable should meet the best waterproof performance requirements. It is recommended to use a 3 core / 6AWG or 14mm² cable (XLPE-90°C, THHN-90°C, or equivalent) to pull the cable from the distribution box. The maximum outer diameter of the cable should be 16mm–23mm
- Level ruler
- Pencil or marker
- Machine drill
- It is recommended to use 1-inch liquid tight flexible metal conduit compliant with NEMA 4 class
- Slotted head screwdriver for M5

8.5 Wall-Mount Bracket Installation Requirements

Before installing the wall-mount bracket, you should confirm that the loading capacity of the wall can reach a weight of 40 kg. When installing on a concrete wall, you can use the included expansion screw to install the bracket and use a concrete drill to drill holes on the concrete wall (Ø6mm) following the hole spacing.

When installing on a wooden wall, you can directly use the included M5 self-tapping screws to install the wall-mount bracket and use the wall- mount backplane to lock and install on the wall directly.

Intellectual property of EVBOLT, Inc.

8.6 Wall-Mounted Installation Requirements

- To select the best location and position to install the wall-mount unit, you should first determine the parking position of the vehicle to ensure the charging connector can be easily inserted into the vehicle charging inlet.
- The wall-mount unit should be located:
    - In a well-ventilated area. Avoid installing in closed boxes or near to exothermic chargers.
    - 1.2 meters or 4 feet above the floor
    - 250mm (10inches) from any obstacles to allow cables to loop around the wires and to allow related maintenance
    - If in an enclosed garage, on the side of vehicle charging inlet

Installation Steps

Warning for Wi-Fi and 4G versions:

Due to different congenital environments, it is recommended to first conduct Wi-Fi and 4G module network signal tests before finalizing your settings. It is recommended that the RSSI (Received Signal Strength Indication) value should be higher than -65dBm. If it is lower than this value, it may result in a weak Wi-Fi or 4G connection or disconnection due to external interference in the area.

Intellectual property of EVBOLT, Inc.

STEP 1

Installation of the wall-mounted metal plate

Take out the wall-mounted metal plate and locate all the installation holes. Use as a template to mark on the wall with a pencil or any tool, and insert 4 sets of rubber plugs and self-tapping screws (M5X40mm) into the wall, as shown in the figure. Install the wall-mounted metal plate on the cement wall.

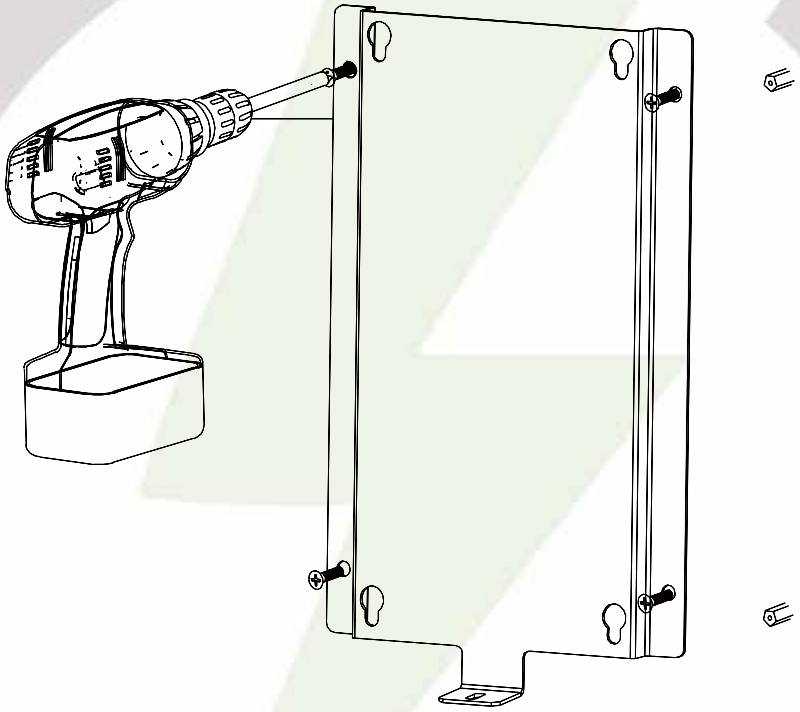

Intellectual property of EVBOLT, Inc.

STEP 2

Installation of the charger

Slide the charger in a vertical direction on to the back plate with applied pressure to ensure a secure mounting.

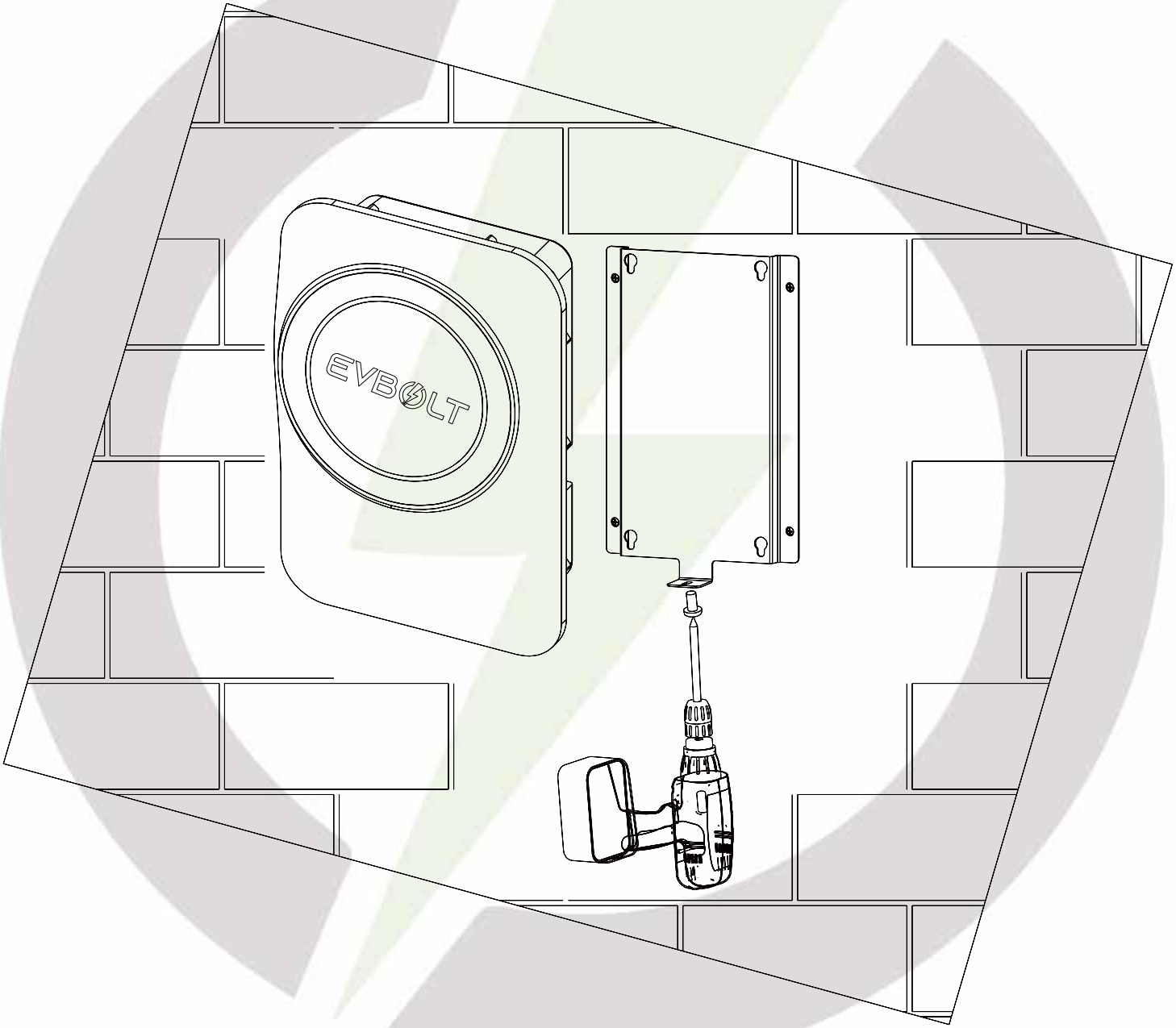

This device shall be mounted at a sufficient height from ground such that the height of the storage means for the coupling device is located between 450 mm (18 inches) and 1.2 m (4 feet) from ground for indoor use,between 600 mm (24 inches) and 1.2 m (4 feet) from ground for outdoor use.

Intellectual property of EVBOLT, Inc.

8.7 Pedestal Installation Requirements

- To select the best location and position to install the pedestal, you should first determine the position if it will be single pedestal or dual. Secondly, identify the position of the vehicle to ensure the charging connector can be easily inserted into the vehicle charging inlet.
- The pedestal unit should be located:
    - In a well-ventilated area. Avoid installing in closed place or near to exothermic chargers
    - Near car parking to avoid wire hanging on dropped down on the walkways
    - 250mm (10inches) from any obstacles to allow related maintenance.
    - On a concrete pad

Intellectual property of EVBOLT, Inc.

STEP 1

Building a concrete pad

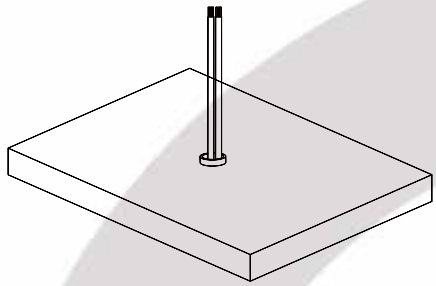

Build a concrete pier on the ground (17.72” x 13.78” x 7.87”)

Draw one cable (two cables for dual chargers) from the center

Pre-embedded Ø3.15” PVC pipe in concrete

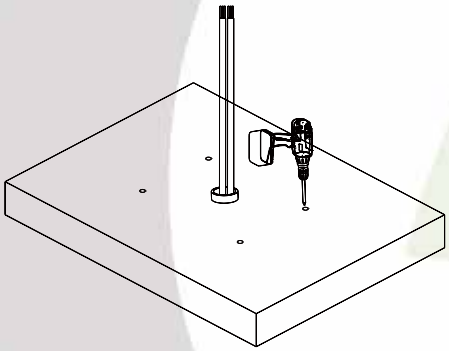

Drill 4 holes in the concrete pier (4-Ø0.55”)

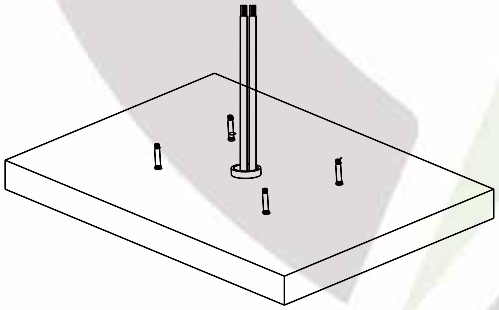

Drive the expansion screw into the concrete pier

Intellectual property of EVBOLT, Inc.

STEP 2

Installing the pedestal

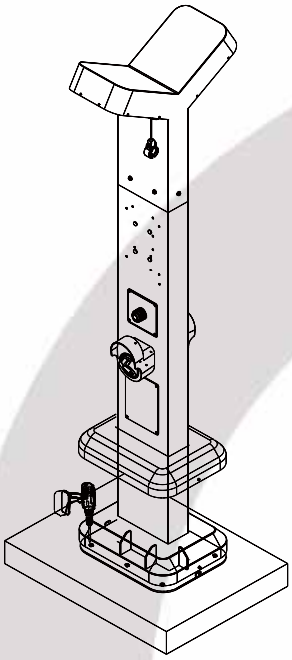

Align the screw holes of the pedestal with the ones in the concrete pier

Tighten the bolts

Secure the base cover

Place the Cable management on top and secure using 4 screws

Intellectual property of EVBOLT, Inc.

STEP 3

Installing the charger

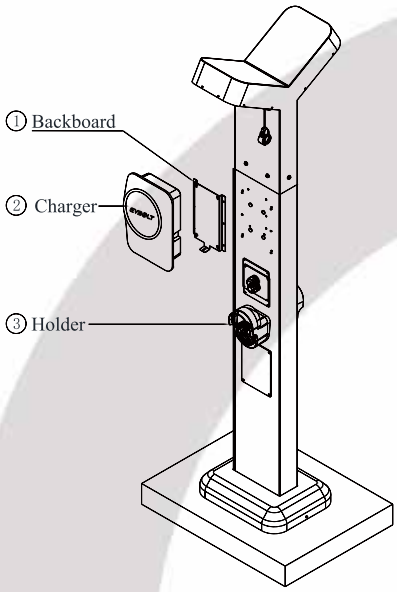

Assemble the backplate on the pedestal as explained in Section 8.6

Install the charging equipment as explained.

Install the holder on pedestal

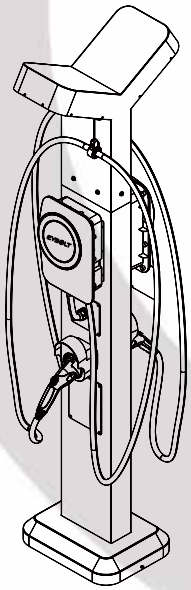

Pull down the slinger ring

Assemble the wire in cable management, clamp clips at suitable place.

Replace the EV connector in the holder

Intellectual property of EVBOLT, Inc.

9. Operating Instructions

9.1 Operating Steps (ONLINE)

For commercial purposes, this product can be connected to internet via Wi-Fi or 4G LTE. This is the case for Public and Semi-Public chargers. The chargers can be accessed using EVBOLT Application or WebApp.

9.1.1 EVBOLT iOS/Android Application

i. Download the EVBOLT App from AppStore or Play Store

ii. Create an account on the app, or use an existing account

iii. Add the payment method

iv. Locate the charger on the app

v. Start the transaction in the app

vi. Plug-in the connector to the vehicle inlet

vii. Stop the charging session at the end

viii. Disconnect the connector from vehicle

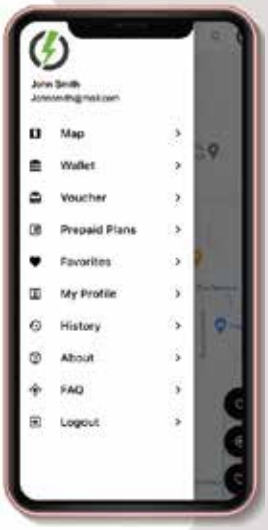

9.1.2 EVBOLT WebApp

i. Scan the QR Code located on the charger

ii. Add the payment method

iii. Start the transaction in the app

iv. Plug-in the connector to the vehicle inlet

v. Stop the charging session at the end

vi. Disconnect the connector from vehicle

Intellectual property of EVBOLT, Inc.

9.2 Error and Warning Message

Status	RED Light	Notes
Input OVP	Constantly Bright	Auto Recover
Input UVP	Constantly Bright	Auto Recover
Output OCP	Constantly Bright	Auto Recover
RCD Abnormal	Constantly Bright	Auto Recover
Ground Fault	Constantly Bright	Auto Recover
Control Pilot Fault	Constantly Bright	Auto Recover
MCU Self-Test Fail	Constantly Bright	Contact Customer Service
RCD Self-Test Fail	Constantly Bright	Contact Customer Service
Relay Self-Test Fail	Constantly Bright	Contact Customer Service
RCD Abnormal Stop Charging	Constantly Bright	Auto Recover
Output OCP Stop Charging	Constantly Bright	Auto Recover

Intellectual property of EVBOLT, Inc.

10. Maintenance and Repair

10.1 Daily Maintenance

Please keep the charger clean and install it in a clean area with low humidity. Do not install it in an environment near the sea, with high levels of oil, humidity or dust.

- Avoid moisture or water in the charger. If water or excess moisture gets into the charger, immediately power off the charger to avoid immediate danger. Proceed to contact the appropriate maintenance personnel before the next use.
- If there is any damage or dirt on the vehicle connector, charging cable, or vehicle connector holder, please contact maintenance personnel immediately.
- Use the charger correctly. Do not hit or press hard on the case. If the case is damaged, please contact a professional technician.
- Avoid placing the charger near to hot objects and in high-temperature locations, and keep it away from dangerous substances such as flammable gases and corrosive materials.
- Do not place external objects or heavy objects on the charger, in order to avoid danger.

10.2 Maintenance Spares

- This product is covered by a two-year parts warranty. If you have a technical issue, contact our technical support representative at our helpline.

Intellectual property of EVBOLT, Inc.

10.3 Warranty and Maintenance

- The warranty period for this charger is two years and covers parts only.
- All replacement parts provided during the warranty period will be covered for the remaining balance of the original warranty period, in addition to a 90-day grace period.
- During the warranty period, if any repair or maintenance is performed, an additional 90 days will be added to the original warranty period.
- During the warranty period, if any malfunction is caused by regular use in accordance with the user manual and service instructions (to be determined by dealer), the charger shall be repaired free of charge. Except for the following situations, the charger shall be subject to the above warranty terms:
    - Inability to provide valid proof of purchase
    - A product that is out of warranty.
    - Damage caused to the product due to not following the product service instruction for use, maintenance and storage.
    - Damage or malfunction caused by a foreign object entering.
    - Unauthorized repair, disassembly or modification.
    - Damage caused by force majeure (such as lightning, excessive voltage, earthquake, fire, flood, etc.).
    - Malfunction and damage caused by other unavoidable external factors.
    - Malfunction and damage caused by improper use of the equipment, such as water or other solutions entering into the equipment.
    - Malfunction and damage caused by the mains power supply and voltage which is not specified for use with the charger equipment.

Intellectual property of EVBOLT, Inc.

© 2024 EVBOLT INC. All Rights Reserved.

Federal Communications Commission (FCC) Statement.

This device complies with part 15 of the FCC Rules. Operation is subject to the following two conditions:

(1) This device may not cause harmful interference, and

(2) this device must accept any interference received, including interference that may cause undesired operation.

Note: This equipment has been tested and found to comply with the limits for a Class B digital device, pursuant to part 15 of the FCC Rules. These limits are designed to provide Reasonable protection against harmful interference in a residential installation. This equipment generates, uses and can radiate radio frequency energy and, if not installed and used in accordance with the instructions, may cause harmful interference to radio communications. However, there is no guarantee that interference will not occur in a particular installation. If this equipment does cause harmful interference to radio or television reception, which can be determined by turning the equipment off and on, the user is encouraged to try to correct the interference by one or more of the following measures:

•Reorient or relocate the receiving antenna.

•Increase the separation between the equipment and receiver.

•Connect the equipment into an outlet on a circuit different from that to which the receiver is connected.

•Consult the dealer or an experienced radio/TV technician for help.

Warning: Changes or modifications made to this device not expressly approved by **EVBOLT, Inc.** may void the FCC authorization to operate this device.

Note: The manufacturer is not responsible for any radio or TV interference caused by unauthorized modifications to this equipment. Such modifications could void the user's authority to operate the equipment.

RF exposure statement:

This device complies with FCC RF radiation exposure limits set forth for an uncontrolled environment. The device is installed and operated without restriction.