BG-4021A Active Loudspeaker

User Manual

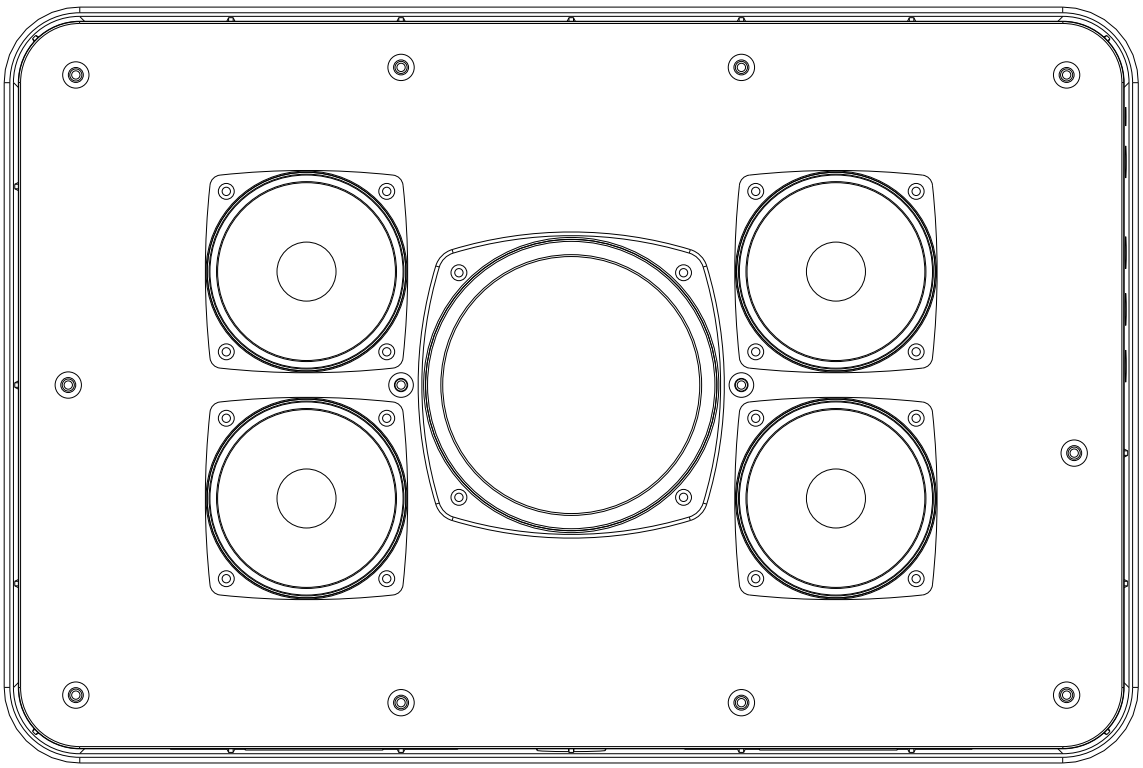

www.ivtwo.com.cn

WARNING

FOR YOUR OWN SAFETY,PLEASE READ THIS USER MANUAL CAREFULLY BEFORE YOUR INITIAL START-UP!

- Immediately upon receiving this product,carefully unpack the carton and check the contents to ensure that all the parts are present.
- Before your initial start-up,please make sure that there is no damage caused during transportation.
- Should there be any damage,consult your dealer and do not use the equipment.
- Retain the carton and all packaging materials.
- In the event that a fixture must be returned to the supplier,it is important that the fixture is returned in the original carton and packaging.
- To maintain the epuipment in good working condition and to ensure safe operation,it is necessary for the user to follow the safety instructions and warning notes written in this manual.
- Please note that damages caused by user modifications to this equipment are not subjeat to warranty.

CAUTION!
KEEP THIS EQUIPMENT AWAY FROM MOISTURE, RAIN AND LIQUIDS,AND OUT OF DAMP/HUMID ENVIRONMENTS

DANGER TO LIFE!
BEFORE OPERATING THE SPEAKER FOR THE FIRST TIME, THE INSTALLATION HAS TO BE APPROVED BY AN EXPERT

IMPORTANT:
The manufacturer will not accept liability for any resulting damages caused by the non-observance of this manual or any unauthorised modification to the equipment.

- Never leave any cables lying around.
- Do not use the unit near stoves, heaters, radiators , or other heat producing devices.
- Do not insert any objects into the grille.
- Never remove warning or informative labels from the equipment.
- Do not open the equipment and do not modify the equipment.
- Only use the equipment indoors.
- Do not expose to flammable sources,liquids or gases.
- Do not use the incorrect cables or defective cables.
- Do not drive the inputs with a signal level higher than required to drive the equipment to its full output
- Prevent distortion! Make sure that all components connected to the speaker have sufficient power ratings.

Distortion will be generated if the components are operated at their linits.

- The user is responsible for correct positioning and operation of this fixture. The manufacturer will not accept liability for damages caused by the misuse or incorrect installation of this equipment.
- Repairs,servicing and power connection must only be carried out by a qualified technician,THIS UNIT CONTAINS NO USER SERVICEABLE PARTS.
- This fixture is for professional use only- it is not designed for or suitable for household use. The product must be installed by a qualified technician in accordance with local territory regulations. The safety of the installation is the responsibility of the installer. The fixture presents risks of severe injury or death to fire hazards,electric shock and falls.
- WARRANTY : Three years from date of purchase.

OPERATING DETERMINATIONS

If this equipment is operated in any other way, than those described in this manual, the product may suffer damage and the warranty becones void.
Incorrect operation may lead to danger e.g: short-circuit,burns and electric shocks etc.
Incase of malfunction this fixture should be returned for service or inspection.
Do not endanger your own safety and the safety or others!
Incorrect installation or use can cause serious damage to people and/or property.

BG-4021A

The BG-4021A is an ultra-thin, compact, and high-power mode reproducible tablet audio system. Adopting TWS interconnection technology, wireless connection within 20 meters.Using four 2-inch neodymium magnetsHigh fidelity full range speaker and a 3-inch frequency tuning basin,It ensures high-definition mid to high frequencies while retainingA certain amount of low-frequency response. It can be used for walls orSupported by a tripod on the desktop.

Place of application:

- Small meeting room,
- Monitoring room
- Background music
- Personal studio
- Home room

Model	BG-4021A
Continuous power(RMS)	60W
Peak power	120W
Max.calculated SPL	98dB
Sensitivity (1W/1m)	90dB
Frequency response	160Hz-20KHz
Amplifier power	75W RMS,150W Peak
Cabinet	ABS engineering plastics
Front panel	Light blank perforated grill
Bass driver	4×2"
Passive loudspeaker	1×3"
Nominal impedance	4 Ω
Connections	TWS,USB,3.5mm earphone
Dimensions (H×W×D)	300×200×50mm
Weight	1.2kg

BG-4021A Bluetooth TWS connection sequence:

1. First, power on both speakers and switch to Bluetooth mode.
2. Press and hold the mode button on the left speaker for about 3 seconds before releasing.
3. In general, after waiting for 10 seconds, the main box will be connected to the secondary box. After connecting, the mode button light will flash at 500mS (the left side is the main box, and the right side is the secondary box)
4. When TWS is connected, long press the mode button of one of the speakers for 2 seconds to disconnect. The main box will automatically connect to the secondary box after the next power on.

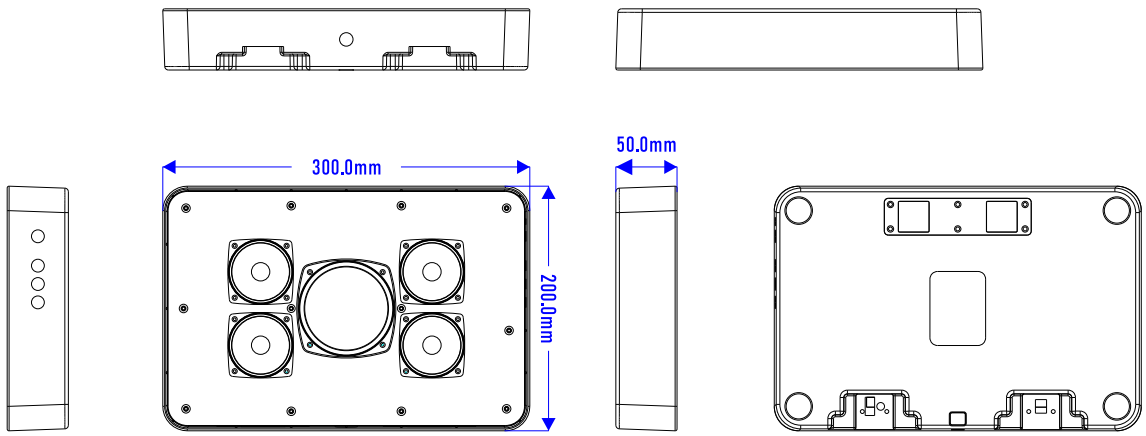

Correct Disposal of this Product
(Waste Electrical & Electronic Equipment)

(Applicable in the European Union and other European countrieswith separate collection systems)

This marking shown on the product or its literature, indicates that it should not be disposed ofwith other household wastes at the end of its working life. To prevent possible harm to theenvironment or human health from uncontrolled waste disposal, please separate this from othertypes of wastes and recycle it responsibly to promote the sustainable reuse of material resources.

Household users should contact either the retailer where they purchased this product, or theirlocal government office, for details of where and how they can take this item for environmentallysafe recycling.

Business users should contact their supplier and check the terms and conditions of thepurchase contract. This product should not be mixed with other commercial wastes for disposal.

FCC Warning

This device complies with Part 15 of the FCC Rules. Operation is subject to the following two conditions:
(1) This device may not cause harmful interference, and (2) this device must accept any interference received, including interference that may cause undesired operation.

NOTE 1: This equipment has been tested and found to comply with the limits for a Class B digital device, pursuant to part 15 of the FCC Rules. These limits are designed to provide reasonable protection against harmful interference in a residential installation. This equipment generates, uses and can radiate radio frequency energy and, if not installed and used in accordance with the instructions, may cause harmful interference to radio communications. However, there is no guarantee that interference will not occur in a particular installation. If this equipment does cause harmful interference to radio or television reception, which can be determined by turning the equipment off and on, the user is encouraged to try to correct the interference by one or more of the following measures:
- Reorient or relocate the receiving antenna.
- Increase the separation between the equipment and receiver.
-Connect the equipment into an outlet on a circuit different from that to which the receiver is connected.
-Consult the dealer or an experienced radio/TV technician for help.

NOTE 2: Any changes or modifications to this unit not expressly approved by the party responsible for compliance could void the user's authority to operate the equipment.

RF Exposure Statement
To maintain compliance with FCC'S RF Exposure guidelines, This equipment should be installed and operated with minimum 20cm between the radiator and your body. This device and its antenna(s) must not be co-located or operation in conjunction with any other antenna or transmitter.