Exercise Bike

USER MANUAL

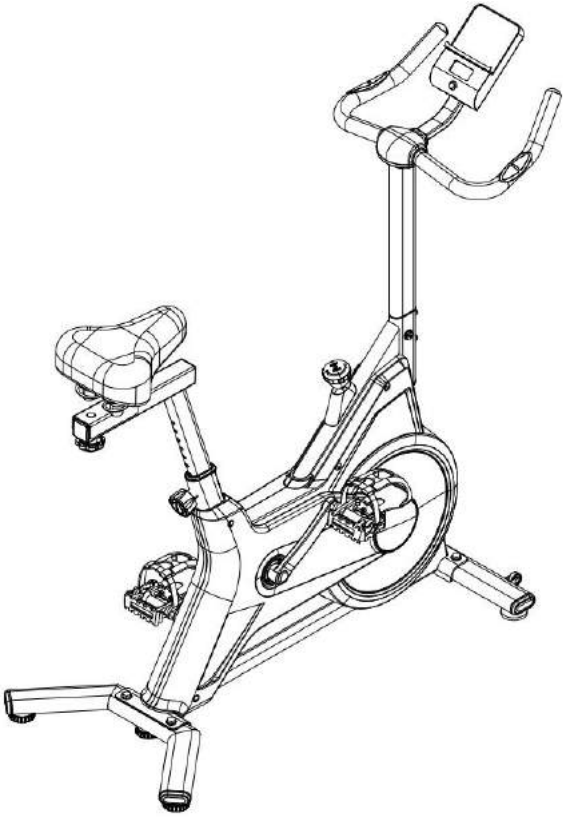

Model:LC01

Note: Please read this product manual carefully before installing or using our products

CONTENTS

1.PRODUCT SPECIFICATION - 01
2.IMPORTANT SAFETY INSTRUCTIONS - - - - - - - - - - - - - - - - - - 02
3.USER INSTRUCTIONS - 03–04
4.PRODUCT INTRODUCTION - 05–06
5.ASSEMBLY INSTRUCTIONS - 07–09
6.SEAT ADJUSTMENT INSTRUCTIONS - - - - - - - - - - - - - - - - - - - 10
7.INSTRUCTIONS ON PRODUCT USAGE - - - - - - - - - - - - - - - - - 10–11
8.ELECTRONIC MONITOR OPERATION GUIDE - - - - - - - - - - - - 11–13
9.BLUETOOTH & APP CONNECTION - - - - - - - - - - - - - - - - - - - 14–18
10.TROUBLESHOOTING - 19

1.PRODUCT SPECIFICATION

Product Name: Exercise Bike
Model: LC01
Trademark: Wdemngg
Maximum weight capacity: 300lbs
Product weight: 19kg
Product dimensions: 1030*490*1060mm
Production date: 06-15-2026
Expiration date： 06-15-2036
Manufacturer： VISTRA EASYSHOP LIMITED
Manufacturer address: RM 867,8/F. JC TOWER,91 WAIYIP ST,KWUN TONG,000000,HK
Tel: +852 52014269
Email: VISTRA2004@outlook.com
Importer： VISTRA EASYSHOP LIMITED
Importer Address： RM 867,8/F. JC TOWER,91 WAIYIP ST,KWUN TONG,000000,HK
Tel： +852 52014269
Email： VISTRA2004@outlook.com
Batch id： 20260615
SN： 20260615

2.IMPORTANT SAFETY INSTRUCTIONS

⚠ *US WARNING*

1. For indoor use only. Place the bike on a flat, stable and dry surface. Keep it away from direct sunlight, heat sources and humid areas to prevent component damage and rust.
2. Wear fitted sportswear and professional athletic shoes while exercising. Do not wear loose clothes, scarves or hanging accessories, which may get tangled in moving parts and cause injury.
3. This equipment is designed for single-user use only. Keep children, infants and pets at a safe distance at all times. Do not allow children to ride or play on the bike.
4. Always check all screws, knobs, pedals and frame connections for tightness before each use. Stop using the bike immediately if any part is loose, deformed or damaged.
5. Adjust seat height and position to a comfortable state before starting exercise. Maintain correct riding posture to avoid joint strain.
6. Start your workout at a low resistance level and increase intensity gradually. Do not perform sudden violent movements during exercise.
7. Complete sufficient warm-up exercises before riding to prevent muscle sprains or sports injuries. Do not engage in strenuous exercise within 40 minutes after meals. Drink water appropriately during long-time workouts.
8. If you are pregnant, suffer from hypertension, heart disease, joint problems or other chronic illnesses, consult a doctor before use. Stop exercising right away if you feel dizzy, chest pain, nausea or physical discomfort.
9. Keep hands, feet and all body parts clear of rotating pedals, flywheel and other moving components during operation.
10. Do not insert any foreign objects into gaps or components of the bike, as this will damage the equipment and create safety hazards.
11. The built-in Bluetooth function is only for data transmission. Do not disassemble the electronic monitor and internal wiring arbitrarily.
12. Do not exceed the maximum user weight marked on the product.

⚠

Before beginning any exercise program, consult your physician first. This is especially important if you are over 35 years of age, pregnant, or have any pre-existing health conditions. Please read the entire user manual and follow all instructions prior to using this equipment.

3.USER INSTRUCTIONS

Basic User Instructions – Pre-Use Checks & Operation Guide

This fitness equipment is categorized as a cardiovascular training device, designed primarily to improve oxygen uptake and blood circulation through endurance training. Long-term aerobic exercise effectively stimulates the cardiovascular and respiratory systems, enhancing heart and lung function. This process ensures optimal oxygen and nutrient supply to tissues and organs, helping to maintain overall fitness.
Before starting any training program, consult your physician to identify any health risks or contraindications to using this product, especially if you have pre-existing medical conditions or use prescription medications. Stop exercising immediately if you experience pain, chest tightness, irregular heartbeat, shortness of breath, dizziness, or nausea.
Based on cycling principles, this bike uses a mechanical magnetic resistance system to provide smooth, adjustable resistance. You can set the resistance level by turning the adjustment knob: clockwise increases resistance, while counterclockwise decreases it. The equipment is safe, reliable, and suitable for use at home, in the office, or in small fitness studios.

Usage Instructions:

1. Check Stability Before Use Before starting your workout, ensure the equipment is stable and does not wobble. If instability is caused by an uneven floor, adjust the four stabilizer feet to level the bike.

2. Adjust Seat & Handlebar Position Adjust the seat height and position by modifying the seat post and horizontal slider of the seat tube. Also adjust the handlebar height according to your body size and arm length to achieve a comfortable riding position.

3. Set Resistance to Your Fitness Level Use the resistance adjustment knob to set the resistance level that matches your fitness level. It is generally recommended to train three times a week for about one hour, maintaining a heart rate between 110–150 beats per minute for optimal results.

4. Operation & Emergency Stop This equipment supports bidirectional movement. If you need to stop suddenly due to overexertion, press the brake knob for an emergency stop. Do not leave the seat until all moving parts have come to a complete stop.

PROHIBITION

1. Do not use the product if the frame is cracked, deformed, or if any welding parts have fallen off—otherwise, you may be injured accidentally.
2. Do not jump on or off the bike while the flywheel is still moving, as this may cause you to trip or fall.
3. Do not use or store the product in damp areas, near bathrooms, or where water may drip, as moisture can cause rust or component damage.
4. Never expose the product to direct sunlight or place it near high-temperature objects such as stoves, heaters, or radiators. Excessive heat can damage plastic and metal parts.
5. Do not use the bike if any screws, pedals, or resistance components are loose, damaged, or missing—this may lead to malfunction or injury.
6. Do not modify, disassemble, or tamper with the frame, flywheel, resistance system, or electronic monitor (if equipped) without professional guidance.
7. The equipment is designed for single-user use only. Do not allow others, especially children or pets, to approach or play on the bike during operation.
8. This product is not suitable for people with limited mobility or who cannot operate it safely without assistance, as they may be at risk of injury.
9. Always keep water and liquids away from the bike. Do not drench the frame, console, or moving parts with water or drinks.
10. People who do not regularly exercise should not perform intense exercise abruptly on this bike. Start at a low resistance level and build up gradually.
11. Never exercise immediately after meals or when you feel tired, dizzy, or physically unwell—it may cause discomfort or harm to your health.
12. This product is intended for domestic use only. Do not use it in crowded public places such as schools, gyms, or commercial fitness centers.
13. Do not eat, drink, or perform other distracting activities while riding the bike, as this may cause loss of balance or injury.
14. Do not use the bike after drinking alcohol or taking medications that may impair your coordination or judgment.
15. Do not keep hard, sharp, or heavy objects in your pockets while exercising, as they may fall out, damage the bike, or cause injury.
16. Do not insert any foreign objects into the flywheel, resistance system, or other gaps in the equipment, as this may damage components or create safety hazards.
17. Do not use the bike for any purpose other than its intended indoor cycling training use.
18. Do not place the bike on unstable or sloped surfaces, thick carpets, or soft mats that may cause the equipment to wobble or tip over during use.

4.PRODUCT INTRODUCTION

EXPLODED DRAWING

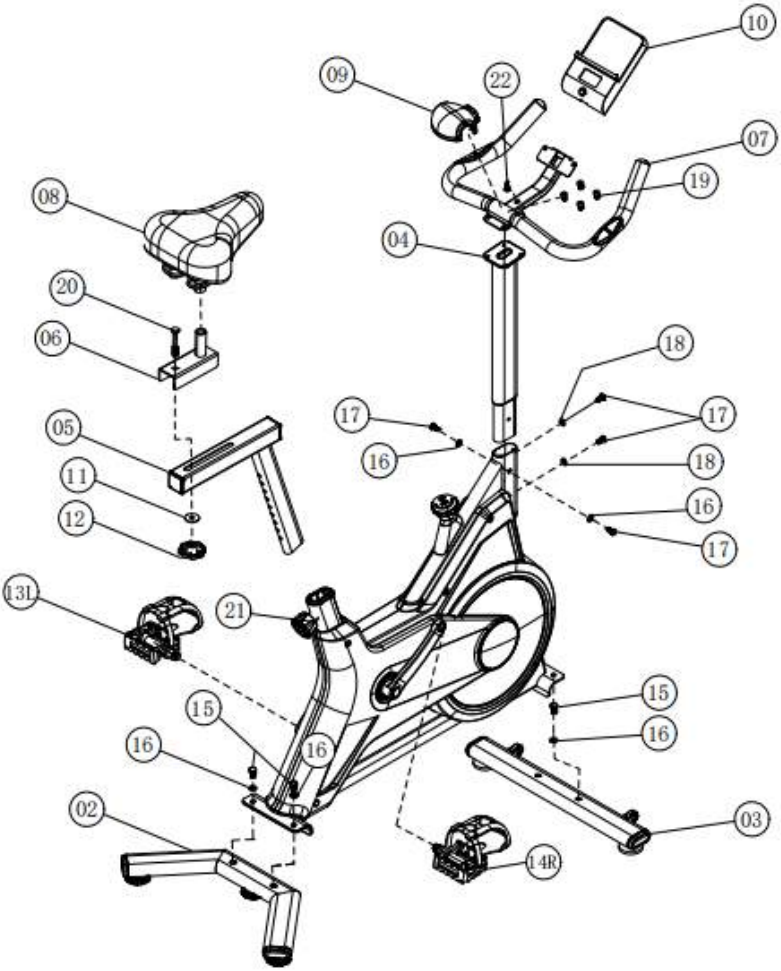

Part list

1.Main Frame ×1	2.Rear Base Tube ×1	3.Front Base Tube ×1	4.Handlebar Insert Tube ×1
5.Seat Post Insert Tube ×1	6.Seat Sliding Tube ×1	7.Handlebar ×1	8.Seat ×1
9.Handlebar Decorative Cover ×1	10.Electronic Monitor ×1	11.Flat Washer M8×30 ×1	12.M8 Knob ×1
13.Left Pedal (L) ×1	14.Right Pedal (R) ×1	15.Screw M8×16 ×4	16.Flat Washer M8×16 ×6
17.Screw M8×12 ×4	18.Arc Washer M8×16 ×2	19.Screw M8×10 ×4	20.Screw M8×65 ×1
21.M16 Pull Pin Knob ×1	22.Screw M4×19 ×1	23.Snap Wrench ×1	24.Hex Wrench M6/M5 ×1

Note: Check all parts before assembly. Contact customer service if any part is missingor damaged.

5.ASSEMBLY INSTRUCTIONS

Step-by-Step Assembly Instructions

Step 1: Assemble Base Frame & Pedals

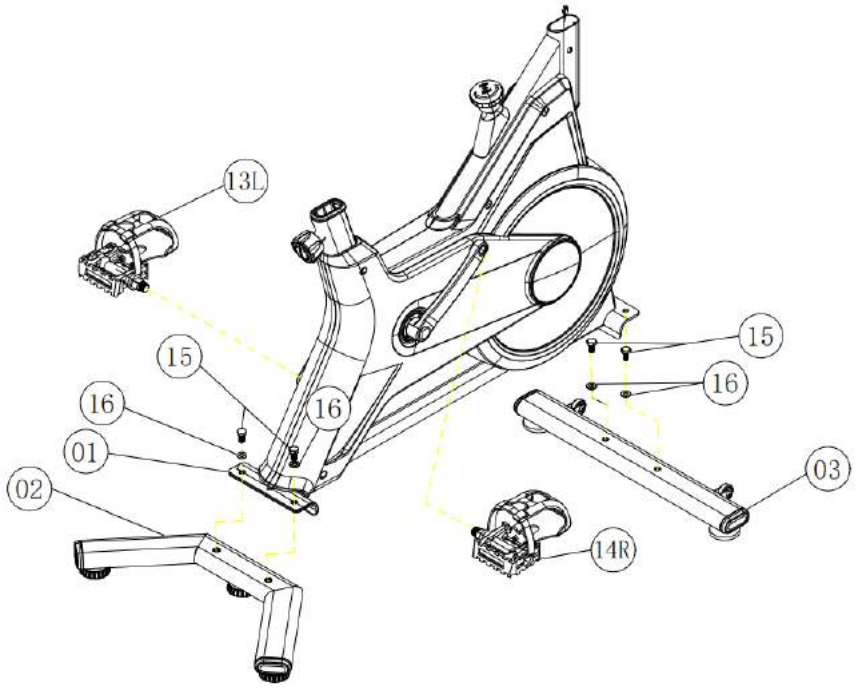

1. Connect Main Frame (1) with Front Base Tube (2) and Rear Base Tube (3).
2. Use 4 pcs M8×16 Screws (15) and 4 pcs M8×16 Flat Washers (16).
   Tighten firmly with the snap wrench.
3. Install Left Pedal (13) and Right Pedal (14) on the left and right cranks. Tighten with the snap wrench clockwise and counterclockwise respectively.

Step 2: Assemble Seat & Adjustment Tube

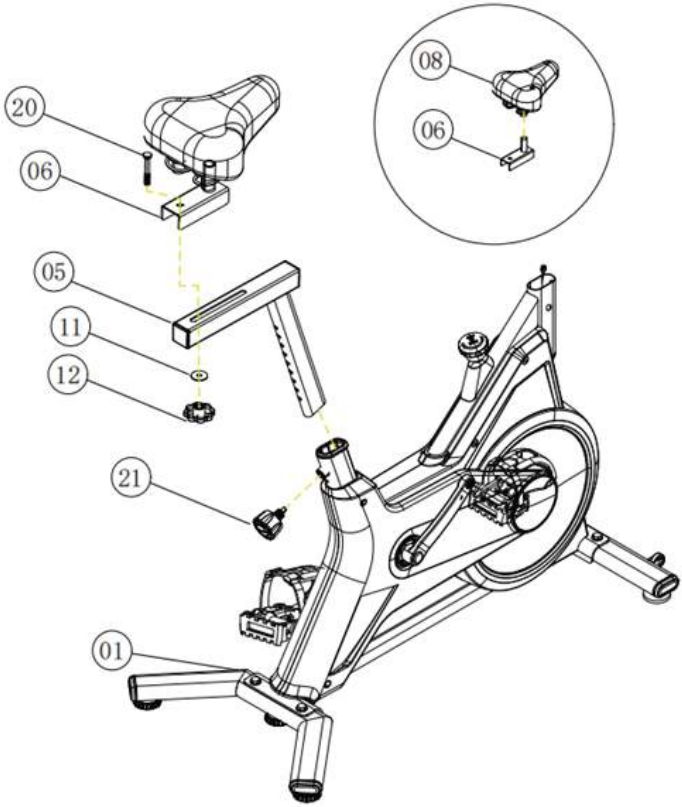

1. Pull out M16 Pull Pin Knob (21) on the main frame, insert Seat Post Insert Tube (5), then tighten the knob for seat height adjustment.
2. Pre-assemble Seat (8) and Seat Sliding Tube (6).
3. Mount the assembled seat assembly onto Seat Post Insert Tube (5).
4. Use M8×65 Screw (20), M8×30 Flat Washer (11) and M8 Knob (12) to connect Seat Sliding Tube and Seat Post Insert Tube. Adjust and lock for front-back seat movement.

Step 3: Assemble Handlebar & Electronic Monitor

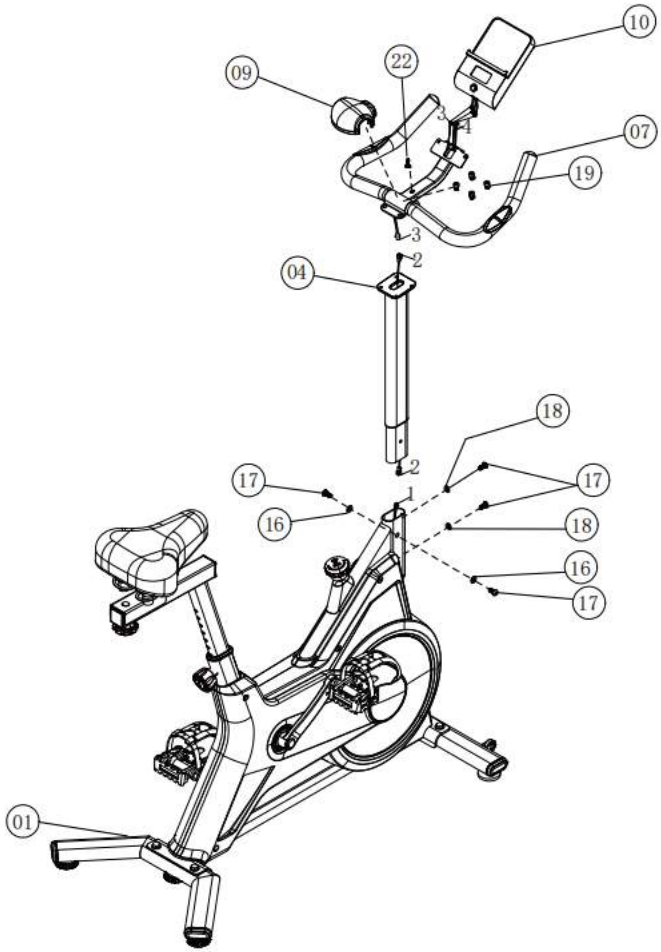

1. Connect Sensor Wire 1 on main frame to Sensor Wire 2 of Handlebar Insert Tube (4). Ensure tight connection.
2. Install Handlebar Insert Tube (4) to the front of main frame. Use 4 pcs M8×12 Screws (17), 2 pcs M8×16 Flat Washers (16) and 2 pcs Arc Washers (18), then tighten all fasteners.
3. Combine Handlebar (7) with the insert tube, lock with 4 pcs M8×10 Screws (19). Connect internal sensor wires.
4. Connect monitor sensor wire and heart rate wire to the handlebar wires, then fix the electronic monitor.
5. Install Handlebar Decorative Cover (9) and fasten with M4×19 Screw (22).

6.SEAT ADJUSTMENT INSTRUCTIONS

♦ *Seat Height Adjustment (Up & Down)*

1. The seat height is adjusted via preset holes on the seat post.
2. Locate the height adjustment bolt on the seat post. Loosen and pull the bolt outward to release the seat post.
3. While holding the seat, move the seat post up or down to align the desired height hole with the bolt.
4. Insert the bolt fully through the aligned holes. You will feel it lock into place when properly engaged.
5. Tighten the bolt securely to lock the seat at the selected height.

Note: Ensure the bolt is fully inserted and tightened before use to prevent the seat from shifting during exercise.

♦ *Seat Position Adjustment (Front & Rear)*

1. The seat can be adjusted forward or backward along the seat slider rail.
2. Loosen the adjustment knob/bolt located under the seat or on the seat slider.
3. Slide the seat forward or backward along the rail to your preferred position.
4. Once you have found the most comfortable position, tighten the knob/bolt firmly to lock the seat in place.

Note: Always check that the seat is securely locked in both height and position before starting your workout.

7.INSTRUCTIONS ON PRODUCT USAGE

1. Foot Pad Adjustment

To ensure a stable and comfortable ride, the bike must be kept level at all times. If you notice the bike wobbling during use, adjust the leveling feet located on the front and rear stabilizers. Turn the feet clockwise or counterclockwise until the bike sits firmly and evenly on the floor with no movement.

2. Emergency Stop & Brake Operation

The flywheel and pedals are connected, so if the flywheel is moving, the pedals will continue to rotate.
Do not step off the bike or remove your feet from the pedals while they are still spinning, as this may cause serious injury.

To stop the bike quickly in an emergency, push down firmly on the brake knob until the flywheel and pedals come to a complete stop.
To slow down or stop normally during a workout, place your hand on the brake knob and gradually press down to increase resistance on the flywheel until the bike comes to a controlled stop.

3. Moving the Bike

This bike is equipped with transport wheels for easy relocation.
To move the bike, grip the front of the handlebar assembly and push down. This will tilt the bike forward until the transport wheels make full contact with the floor.
Once tilted, the bike can be rolled freely to its new location.
For easier handling (especially for women or older users), place one foot on the front stabilizer to hold it down while tilting the handlebar down. When placing the bike back down, keep one foot on the stabilizer to control the descent.

8.ELECTRONIC MONITOR OPERATION GUIDE

Basic Parameters

The electronic monitor collects and displays workout data for your indoor cycling sessions, with optional heart rate and APP connectivity functions.

This monitor displays Workout Time, Speed, Distance, Calories Burned, Total Odometer, Cadence, and Heart Rate. You can switch between automatic cyclic display (SCAN mode) and fixed single data display via the button. It also supports Bluetooth data transmission to your smartphone fitness APPs.

Key features include low power consumption, high-definition display, simple operation, and wide compatibility.

TIME (Workout Time) 00:00 – 99:59 (minutes)
SPD (Speed) 0.0 – 999.9 KM/H
DST (Distance) 0.00 – 999.9 KM
CAL (Calories Burned) 0.0 – 999.9
ODO (Total Odometer) 0.0 – 999.9 KM
PULSE (Heart Rate) 000 – 999 BPM
APP Compatibility Kinomap, Zwift, Fitlog, Fitshow, and more
Power Supply 2 × AAA batteries (not included)
Power Consumption Operating: 0.463 mA / Standby: 3 μA
LCD Size 52 × 23 mm
Overall Dimension 120 × 180 × 30 mm

Operation Steps (Figure 1)

Power On: To activate the monitor, simply start pedaling the bike or press the "Mode" button.
When the "SCAN" icon appears in the upper-left corner of the LCD screen, the display will automatically cycle through the following data at 5-second intervals:
TIME (Workout Time)
SPD (Speed)
DST (Distance)
ODO (Odometer / Total Distance)
CAL (Calories Burned)
PULSE (Heart Rate)
The workout timer will automatically stop counting 3 seconds after you stop pedaling.

(Figure 1)

(Figure 2)

Electronic Monitor Button Function (Figure 2)

While the monitor is cycling through data, press the “Mode” button once to lock the display on the current workout metric.
For example, when the display is showing DST (Distance), pressing the button will make the LCD continuously show only the distance data. The display will remain fixed on this metric until you press the button again, which will advance to the next workout data item.

Heart Rate Detection Instructions (Figure 1)

To view your real-time heart rate, place both hands firmly on the metal sensor pads (marked as “1” and “2” in the diagram) on the handlebars simultaneously. Your current heart rate will then appear in the “PULSE” display area.
If only one hand touches the sensors, or if neither hand makes contact, the heart rate display will show the letter “P” instead of a numerical reading.

Quick Tip: For the most accurate reading, ensure both palms are fully in contact with the metal pads during exercise.

(Figure 1)

(Figure 2)

Data Reset Instructions (Figure 2)

To reset your workout data and start a new session from zero, press and hold the “Mode” button for 3 seconds.
The following data will be cleared:
TIME (Workout Time)
SPD (Current Speed)
DST (Trip Distance)
CAL (Calories Burned)
The ODO (Total Odometer) reading will remain stored and unchanged, allowing it to continue accumulating your total distance across multiple workouts.

Note: This reset will not affect your cumulative Odometer history, which is designed to track your long-term total usage.

9.BLUETOOTH & APP CONNECTION

Connection Instructions

The monitor supports Bluetooth connection with popular fitness apps including Kinomap, Zwift, Fitlog, and Fitshow.
Scan the QR code to select and download your preferred fitness app, then follow the in-app instructions to connect the monitor via Bluetooth.

1、Kinomap

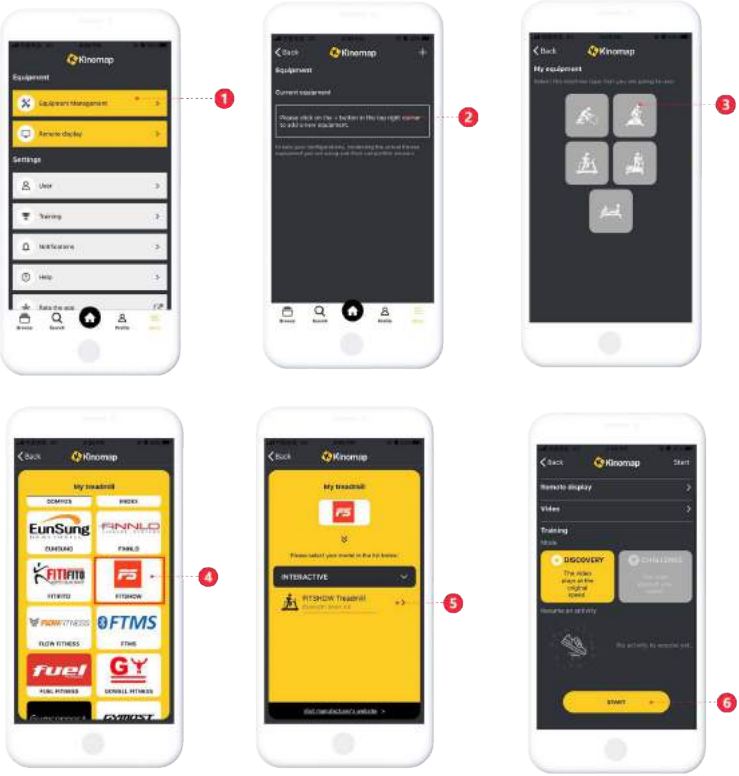

Search, download, and install Kinomap over the App Store.

【1】Enter Kinomap to select [More] page;
【2】Select to add more fitness equipment;
【3】Select the desired device type;
【4】Tap FiteShow entrance;
【5】Tap the matching devices like 'Fs-XXXX' to bind Find related videos to start sports.
【6】Find related videos to start sports.

2、*ZWIFT*

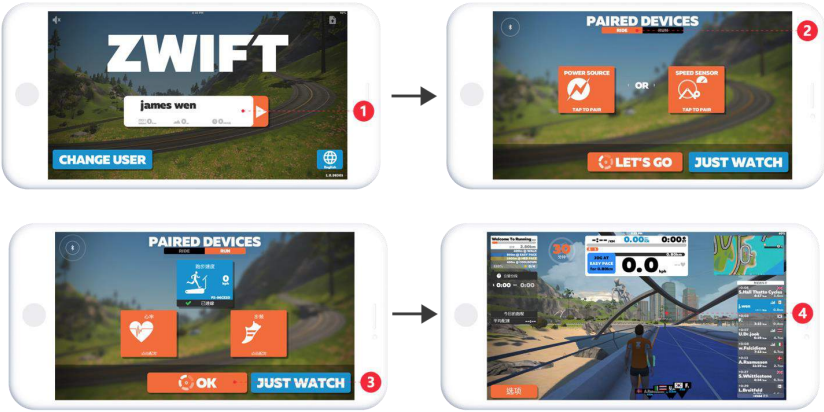

Search, download, and install ZWIFT over the App Store.

【1】Enter ZWIFT to register an account;
【2】Login account to select the paired riding or running equipment;
【3】Pair device successfully, tap OK to start sport;
【4】For riding equipment, start riding directly. For running equipment, need to press the start button to start running.

3、FITSHOW

1.User register/signup and login

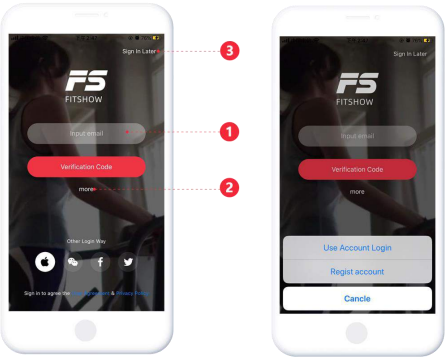

【1】：Generate a verification code to log in directly
【2】：Tap 'More' -> Password Login to input the existing account and password
【3】：Log in as a guest

2.Device Connection

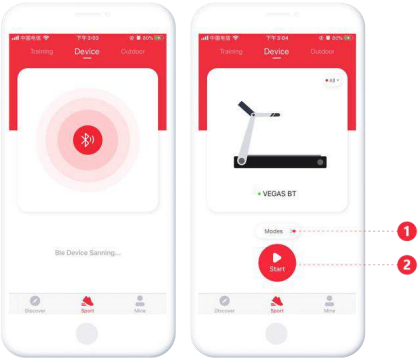

Before connecting the device, please make sure the system Bluetooth and GPS(Andoird8.0 and above required) are ON status. Then go to [Sports - Devices] page, get the devices nearby via Bluetooth search.

Note:

1. Please do not bind devices by the phone Bluetooth list which will disable the APP.
2. If the device is powered by battery, please run the device one or two to activate the device then connect APP.

3.Model Selection

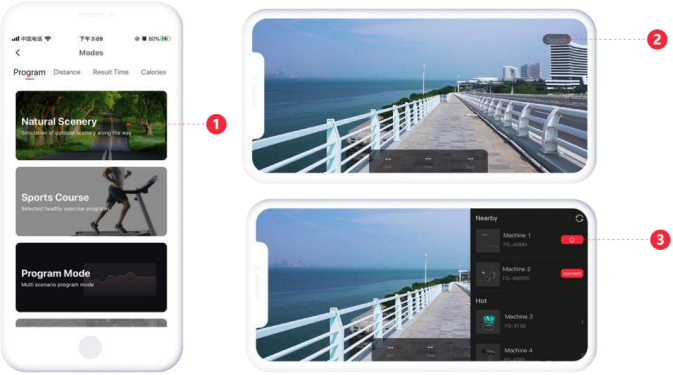

Tap a model【1】 to enter the corresponding sports model. And connect the desired device by the nearby devices list【2】.

4、Sports Control

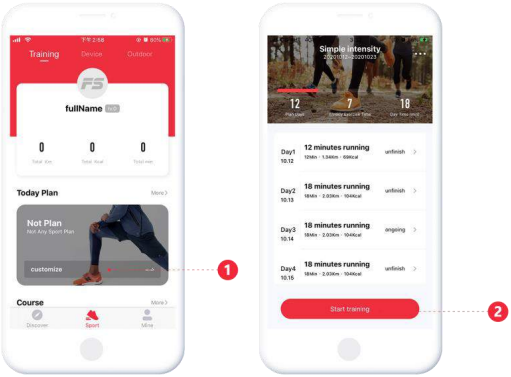

Start the treadmill to enter the sports car table, and control the sports by the 【1】 control options. The motion data is generated synchronously after the sports.

5.Sports Training

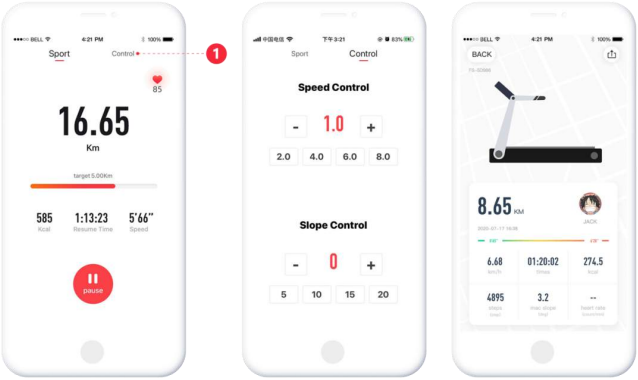

Enter [SPorts - Training] page, make a daily sport plan by the 【1】.
Once the plan is created, tap 【2】 to start the plan.

10.TROUBLESHOOTING

How to adjust the resistance level?	Turn the resistance adjustment knob clockwise to increase resistance, and counterclockwise to decrease resistance.
What to do when the handlebar shakes slightly?	1. Check if the connecting screws between the handlebar and the front column tube are securely tightened. 2. Verify that the handlebar retaining knob is fully locked.
What to do when the whole bike shakes during use?	1. Check if the front and rear base tubes are securely fastened. 2. Adjust the four stabilizer feet at the bottom to ensure the bike is level on the floor.
What to do when the pedals feel loose?	1. Confirm that both left and right pedals are correctly installed and fully tightened onto the crank arms. 2. Check and tighten the inner fixing nuts on the pedals.
What to do when the bike tilts or wobbles?	1. Ensure the front and rear stabilizer feet are on the same plane. 2. Adjust and rotate the leveling feet until the bike sits evenly on the floor.
What to do when the electronic monitor does not display?	1. Check if the positive (+) and negative (-) terminals of the AAA batteries are installed correctly. 2. Replace the old batteries with new ones. 3. Ensure the sensor wire connection between the monitor and the bike is secure.
What to do when Bluetooth cannot connect?	1. Restart your smartphone’s Bluetooth and the monitor. 2. Keep your phone within 1 meter of the bike and ensure no other devices are connected. 3. Verify the app supports the monitor (Kinomap, Zwift, Fitlog, Fitshow).
What to do when the heart rate function is not working?	1. Ensure both hands are fully in contact with the metal sensor pads on the handlebars. 2. Clean the metal sensor pads to remove sweat or dust.

FCC STATEMENT

This device complies with Part 15 of the FCC rules. Operation is subject to the following two conditions:

(1) This device may not cause harmful interference, and
(2) This device must accept any interference received, including interference that may cause undesired operation.
(3) Any Changes or modifications not expressly approved by the party responsible for compliance could void the user's authority to operate the equipment.

Note: This equipment has been tested and found to comply with the limits for a Class B digital device, pursuant to part 15 of the FCC Rules. These limits are designed to provide reasonable protection against harmful interference in a residential installation. This equipment generates, uses and can radiate radio frequency energy and, if not installed and used in accordance with the instructions, may cause harmful interference to radio communications. However, there is no guarantee that interference will not occur in a particular installation. If this equipment does cause harmful interference to radio or television reception, which can be determined by turning the equipment off and on, the user is encouraged to try to correct the interference by one or more of the following measures:

• Reorient or relocate the receiving antenna.
• Increase the separation between the equipment and receiver.
• Connect the equipment into an outlet on a circuit different from that to which the receiver is connected.
• Consult the dealer or an experienced radio/TV technician for help.

Wdemngg