PHENYX PRO®

PTU-X

Plug-On UHF Wireless Transmitter Receiver System

USER MANUAL

IMPORTANT SAFETY INSTRUCTIONS

1. Read and follow these instructions carefully.
2. Only use attachments, accessories, and spare parts specified by the manufacturer.
3. Avoid exposing the product and its connections to liquids and electrically conductive objects that are not essential for its operation.
4. Do not operate near any heat sources, such as open flames, radiators, or other apparatus that produce heat.
5. Keep the power cord safe by preventing it from being walked on or pinched, especially at the plugs.
6. Do not use the apparatus during lightning storms, and unplug it when unused for a long period of time.
7. Any modifications not approved by the manufacturer for the product could result in personal injury or product failure.
8. Operate this product within its proper operating temperature range.

Caution: This symbol indicates the unit might have a risk of electric shock.

Caution: This symbol is used to alert you to potential personal injury hazards. Obey all safety messages with this symbol to avoid possible injury or death.

Caution: This symbol indicates possible risk of electric shock within the unit.

Caution: This symbol means the product must not be discarded as household waste, and should be delivered to an appropriate collection facility for recycling. Proper disposal and recycling helps protect natural resources, human health and environment. For more information on disposal and recycling of this product, contact your local municipality, disposal service, or shop where you bought this product.

IMPORTANT PRODUCT INFORMATION

Licensing: A ministerial license may be required to operate this equipment in certain areas. Consult your national authority for possible requirements. Changes or modifications not expressly approved by the manufacturer responsible for compliance could void the user's authority to operate the equipment. Licensing of PHENYX PRO wireless microphone equipment is the user's responsibility, and licensability depends on the user's classification and application, and on the selected frequency. PHENYX PRO strongly urges the user to contact the appropriate telecommunications authority concerning proper licensing, and before choosing and ordering frequencies.

FCC Information

This device complies with part 15 of the FCC rules. Operation is subject to the following two conditions:

(1) This device may not cause harmful interference, and

(2) This device must accept any interference received, including interference that may cause undesired operation.

*NOTE: This equipment has been tested and found to comply with the limits for a Class B digital device, pursuant to Part 15 of the FCC Rules. These limits are designed to provide reasonable protection against harmful interference in a residential installation. This equipment does not cause harmful interference to radio or television reception, which can be determined by turning the equipment off and on, the user is encouraged to try to correct the interference by one or more of the following measures:

- Reorient or relocate the receiving antenna.
- Increase the separation between the equipment and receiver.
- Connect the equipment into an outlet on a circuit different from that to which the receiver is connected.
- Consult the dealer or an experienced radio/TV technician for help

This equipment complies with FCC radiation exposure limits set forth for an uncontrolled environment. This equipment should be installed and operated with minimum distance 0 cm between the radiator & your body.

Caution: Any changes or modifications to this device not explicitly approved by manufacturer could void your authority to operate this equipment.

IC Statement

This device contains license-exempt transmitter(s)/receiver(s) that comply with Innovation, Science and Economic Development Canada's licence-exempt RSS(s). Operation is subject to the following two conditions:

(1) This device may not cause interference, and

(2) This device must accept any interference, including interference that may cause undesired operation of the device.

The term "IC" before the certification/registration number only signifies that the Industry Canada technical specifications were met. This product meets the aplicable Industry Canada technical specifications.

Cet appareil contient des émetteurs/récepteurs exemptés de licence conformes aux RSS (RSS) d'Innovation, Sciences et Développement économique Canada. L'exploitation est autorisée aux deux conditions suivantes :

(1) l'appareil ne doit pas produire de brouillage, et

(2) l'utilisateur de l'appareil doit accepter tout brouillage radioélectrique subi, même si le brouillage est susceptible d'en compromettre le fonctionnement.

This equipment complies with ISED radiation exposure limits set forth for an uncontrolled environment. This equipment should be installed and operated with minimum distance 0 cm between the radiator & your body

Cet équipement est conforme aux limites d' exposition aux rayonnements ISED établies pour un environnement non contrôlé.

Cet équipement doit être installé et utilisé avec une distance minimale de 0 cm entre le radiateur et votre corps

Industry Canada ICES-003 Compliance Label: CAN ICES-3 (B)/NMB-3(B)

EU Directives

CE This product meets the Essential Requirement of all relevant European directives and is eligible for CE marking.

Meets essential requirements of the following European Directives:
WEEE Directive 2019/19/EU
RoHS Directive EU 2015/863
Note: Please follow your regional recycling scheme for batteries and electronic waste

Authorized European Representative

UK REP

UK CROSSBORDER LIMITED
7 Bell Yard London WC2A 2JR, UK
United Kingdom
Email: uk-crossborder@outlook.com

EU REP

OASIS SERVICE SP. Z O.O.
ul. Mlynarska 42 lok.115
01-171 Warszawa
Email: oasisservicepl@outlook.com

Thank you for purchasing the Phenyx Pro PTU-X. For the best results and utmost satisfaction with your new unit, please read this manual carefully to ensure proper operation, and keep it for future reference. For more information, please visit our store: www.phenyxpro.com

Table of Contents

System Description.....5

System overview.....5

System features.....5

System components.....5

Operation Guidance.....6

Set up.....6

Frequency change.....6

Operation tips.....7

Wireless tips.....8

Functions of Parts.....8

Receiver.....8

Transmitter.....9

Troubleshooting Tips.....10

Specifications.....11

Technical Support & Warranty Information.....12

System Description

System overview

Introducing the Phenyx Pro Plug-on Wireless Transmitter Receiver System: Seamless Wired to Wireless Conversion. Operate flawlessly on a stable UHF 500MHz frequency with dynamic 16-channel flexibility, ensuring minimal interference and optimal device coordination. It features +48V phantom power for diverse microphone compatibility and MIC/LINE conversion for easy integration. An ergonomic design and long battery life provide dependable performance and comfort for prolonged usage. This intuitive, plug-and-play system offers unmatched freedom and quality, empowering your wired microphones with Phenyx Pro's PTU-X.

System features

- Utilizes UHF wireless transmission on a 500MHz frequency, significantly reducing interference from Wi-Fi, Bluetooth, and other 2.4 GHz devices while providing stable performance superior to 2.4 GHz systems.
- Offers 16 selectable frequencies, ensuring smooth, interference-free performance adaptable to any setting.
- Delivers superior sound fidelity with a dynamic range over 100dB and a signal-to-noise ratio greater than 98dB, capturing every audio detail for crystal-clear quality.
- Equipped with +48V phantom power, making it compatible with both dynamic and condenser microphones for versatile usage.
- Features a MIC/LINE switch to toggle gain between microphone and line-level signals, optimizing input sensitivity for different audio sources.
- Includes an adjustable locking knob that securely attaches a wired microphone, ensuring it remains firmly in place during use.
- Designed with a quadrilateral prism shape that prevents rolling and ensures stable placement on flat surfaces.
- Boasts a 1000mAh battery providing over 7 hours of continuous use, ideal for extended performances and presentations without recharging.

System components

1 x XLR Transmitter
1 × XLR Receiver
1 × Dual Charging Cable
1 x User Manual
1 x Storage Pouch

Operation Guidance

Set up

Step 1: Ensure sufficient battery charge for both the transmitter and receiver.

Step 2: Press and hold the POWER button on both the receiver and transmitter to power them on. By default, the transmitter and receiver will automatically pair up within seconds.

Step 3: Connect the receiver and transmitter to the next-level devices. Typically, connect the transmitter to dynamic microphones and condenser microphones, whereas connect the receiver to amplifiers, mixers, PA systems, etc.

***Note:** When connecting the transmitter to other equipment, ensure that the +48V indicator light is off to avoid potential damage to the microphone or other devices.

Step 4: Adjust the MIC/LINE switch to select the appropriate input level based on your audio source.

Step 5: After successfully connecting, check the setup by talking through the microphone to verify the connection.

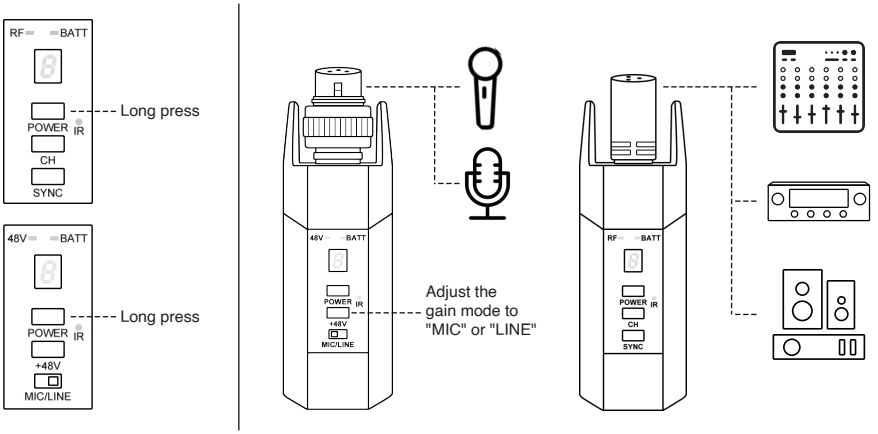

Frequency change

Step 1: Press the CH button on the receiver, select the desired channel, and then press the SYNC button to confirm.

Step 2: Align the IR window of the transmitter vertically with that of the receiver.

Step 3: If pairing is successful, the RF light will remain illuminated in red, and both the receiver and transmitter will display the same channel number.

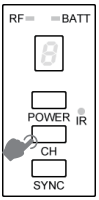

Selects the desired channel

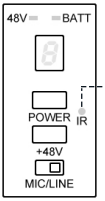

transmitter

VERTICALLY

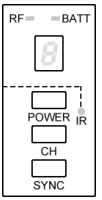

receiver

Operation tips

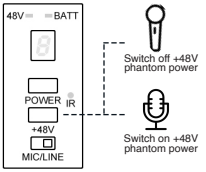

① Ensure that the +48V phantom power is off (the +48V indicator light is off) before connecting the normal dynamic microphone to prevent potential damage. Do not activate the +48V phantom power for dynamic microphones to avoid possible damage.

② After connecting a condenser microphone to the transmitter, press the +48V button to switch on phantom power.

③ Set the switch to "MIC" for microphone-level inputs, suitable for dynamic microphones and condenser microphones (with the +48V phantom power activated).

④ Set the switch to "LINE" for line-level inputs, such as audio mixers, keyboards, synthesizers, and other high-impedance instruments with higher output levels.

⑤ Ensure that the MIC/LINE switch is in the correct position for optimal audio quality.

⑥ Avoid sudden volume changes when switching modes to prevent damage to audio equipment.

⑦ Hold the wired microphone correctly and securely when connecting it to the PTU-X.

⑧ Turn off the power switch while charging, and avoid using the transmitter while charging to maintain battery life.

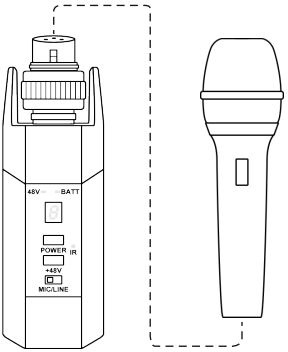

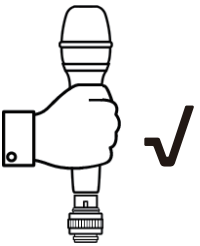

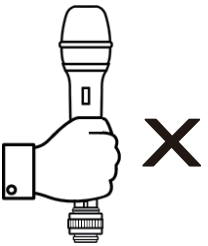

Wireless tips

If you encounter wireless interference or dropouts, try the following suggestions:

① Choose a different frequency channel. Avoid approaching the receiver and transmitters with metal or other dense materials.

② Remove any devices causing possible signal interference, such as cellphones, computers, media players, two-way radios, and digital signal processors.

③ If using multiple wireless systems, ensure each operates on a different frequency channel to prevent interference.

Functions of Parts

Receiver

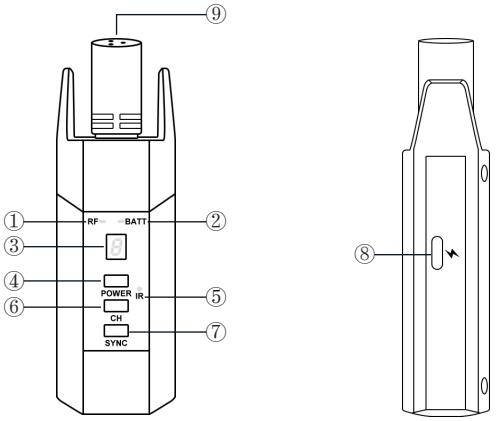

① **RF light:** The RF light remains red when in successful synchronization.

② **BATT light:** Turns yellow when the receiver has low battery and turns off when has sufficient battery. The indicator remains red during charging and turns off when the receiver is fully charged.

③ **Channel display:** Displays the channel number.

④ **POWER button:** Long press this button to turn on or off.

⑤ **IR window:** For infrared synchronization setup.

⑥ **CH button:** Selects the desired channel. There are 16 selectable frequency bands in total, from 0-F.

⑦ **SYNC button:** Press the SYNC button to initiate synchronization process.

⑧ **USB-C port**

⑨ **XLR output jack**

Transmitter

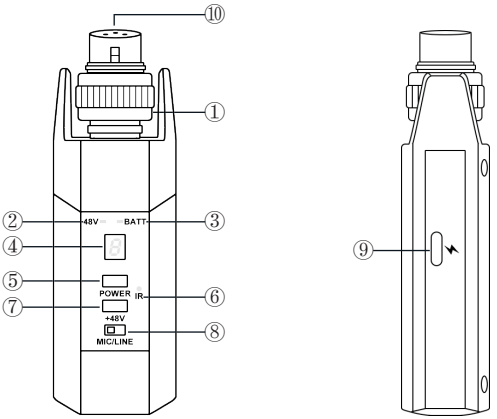

① **Adjustable locking knob:** Rotates to tightly lock the wired mic rophone to the TX.
② **+48V indicator light:** Turns red when the +48V phantom power is turned on.
③ **BATT light:** Turns yellow when the receiver has low battery and turns off when has sufficient battery. The indicator remains red during charging and turns off when the receiver is fully charged.
④ **Channel display:** Displays the channel number.
⑤ **POWER button:** Long press this button to turn on or off.
⑥ **IR window:** For infrared synchronization setup.
⑦ **+48V phantom power:** Press to supply phantom power for condenser microphone.
⑧ **MIC/LINE switch:** Adjust the gain mode to "MIC" or "LINE".
⑨ **USB-C port**
⑩ **XLR input jack**

Troubleshooting Tips

Issue	Solution
No Sound	• Ensure the transmitter and receiver are powered on. Check if the battery is sufficient; otherwise, charge it to ensure its red power indicator lights off while you are using it. • Check that the microphone is turned on and receiving signal from the transmitter. • Make sure that the transmitter and receiver are on the same channel and that the RF light is in solid red to confirm successful synchronization. • If you are connecting a normal or dynamic microphone, please check whether the 48V phantom power is turned off; if you are connecting a condenser microphone, please check whether the 48V phantom power is turned on.
Distortion or Faint Sound	• Adjust the gain mode to either "MIC" or "LINE" within the device settings to select the appropriate input signal type as needed. • Ensure proper frequency selection for the wireless microphone system to avoid interference with other wireless devices. • Ensure that the distance between the transmitter and receiver falls within specified ranges. (Operating Distance: 30 Meters)
Low Battery	• If the battery is low, the BATT indicator light will turn yellow. Charge the receiver/transmitter via a USB-C data cable.
Signal Interference	• Opt for operating within frequency bands with minimal interference. • Remove nearby electronic devices that may cause interference. • Minimize obstacles between TX and RX to ensure smooth signal transmission.

Specifications

Overall System

Wireless Circuitry	Analog
Operating Frequency Band	UHF 550-590 MHz
Number of Frequency Points	Total 16, from 0-F
Input Mode	MIC/LINE
Frequency Response	50 HZ-15 KHz±3 dB
Dynamic Range	> 100 dB
SNR (Signal-to-Noise Ratio)	> 98 dB
RF Sensitivity	-100 dBm
RF Power	10 mw
Operating Time	7-8 Hours
Operating Distance	30 Meters

Receiver

Battery	3.7 V Rechargeable Lithium Battery, 1000 mAh
Impedance	Output Impedance: <600 Ω
Gain Adjustment Range	MIC Mode: 0 dB / LINE Mode: -5 dB
Maximum Output	150-400 mw

Transmitter

Battery	3.7 V Rechargeable Lithium Battery, 1000 mAh
Impedance	Input Impedance: 2 KΩ
Gain Adjustment Range	MIC Mode: 0 dB / LINE Mode: -5 dB

Technical Support & Warranty Information

Our warranty to you:
Phenyx Technology ("Phenyx") warrants Phenyx products against evident defects in material and workmanship for a period of one year from the date of original purchase for use.This warranty is valid exclusively in the US and applies only to the original owner. If you discover a defect covered by this warranty, Phenyx will repair or replace the product at our sole discretion using new or refurbished components. Performance of repairs or replacements under this warranty is subject to registration of your product at www.phenyxpro.com

Product failures not covered by this warranty:
This warranty covers defects in manufacturing that arise from the correct use of the device. It is limited to defects in materials or workmanship and does not cover electrical or mechanical damage resulting from abuse, misuse, unauthorized modification, lack of reasonable care, extreme heat, cold, damage due to natural forces,or corrosive environments. This warranty does not cover the normal wear and tear on covers, housing, connectors, and accessories.

Limits of liability:
If your Phenyx product fails or does not perform as warranted, your sole recourse shall be to replace or repair it as described above. Phenyx will not be liable to you or anyone else for any damages that result from the failure of this product. These damages include, but are not limited to, the following: lost profits, lost savings, lost data, damage to other equipment, and incidental or consequential damages arising from the use of or inability to use this product. IN NO EVENT PHENYX SHALL BE LIABLE FOR MORE THAN THE AMOUNT OF YOUR PURCHASE PRICE, NOT TO EXCEED THE CURRENT LIST PRICE OF THE PRODUCT.

How to obtain service under this warranty:
If you are receiving a system that is defective or you have any questions regarding operation or warranty cover, please contact us at support@phenyxpro.com with any questions or concerns and a Phenyx Pro representative will contact you to provide assistance. You can also reach out to us through Facebook page: www.-facebook.com/phenyxusa/ or our official website: www.phenyxpro.com.

PHENYX PRO®

www.phenyxpro.com

Made in China
Manufacturer: Guangzhou VILAN Technology CO., LTD.
Address: No.101 Wanggangdexing Road, Baiyun District, Guangzhou, China
After-sales Service E-mail: support@phenyxpro.com ; info@phenyxpro.com