# FCC Test Report

| | | |
|---|---|---|
| **Applicant** | : | **Minix Group Company Limited** |
| **Address** | : | **Unit 1501, Chevalier Commercial Center, No.8 Wang Hoi Road, Kowloon Bay, Hong Kong, China** |
| **Product Name** | : | **Portable Wireless CP & AA High-definition Touchscreen** |
| **Report Date** | : | **Nov. 05, 2024** |

**Shenzhen Anbotek Compliance Laboratory Limited**

# Contents

1. General Information ..... 6
1.1. Client Information ..... 6
1.2. Description of Device (EUT) ..... 6
1.3. Auxiliary Equipment Used During Test ..... 7
1.4. Operation channel list ..... 7
1.5. Description of Test Modes ..... 8
1.6. Measurement Uncertainty ..... 8
1.7. Test Summary ..... 9
1.8. Description of Test Facility ..... 10
1.9. Disclaimer ..... 10
1.10. Test Equipment List ..... 11
2. Conducted Emission at AC power line ..... 13
2.1. EUT Operation ..... 13
2.2. Test Setup ..... 13
2.3. Test Data ..... 13
3. Duty Cycle ..... 14
3.1. EUT Operation ..... 14
3.2. Test Setup ..... 14
3.3. Test Data ..... 14
4. Emission bandwidth and occupied bandwidth ..... 15
4.1. EUT Operation ..... 16
4.2. Test Setup ..... 16
4.3. Test Data ..... 16
5. Maximum conducted output power ..... 17
5.1. EUT Operation ..... 17
5.2. Test Setup ..... 18
5.3. Test Data ..... 18
6. Power spectral density ..... 19
6.1. EUT Operation ..... 19
6.2. Test Setup ..... 20
6.3. Test Data ..... 20
7. Band edge emissions (Conducted) ..... 21
7.1. EUT Operation ..... 23
7.2. Test Setup ..... 23
7.3. Test Data ..... 23
8. Band edge emissions (Radiated) ..... 24
8.1. EUT Operation ..... 26
8.2. Test Setup ..... 26
8.3. Test Data ..... 27
9. Undesirable emission limits (below 1GHz) ..... 35
9.1. EUT Operation ..... 37
9.2. Test Setup ..... 37
9.3. Test Data ..... 38

10. Undesirable emission limits (above 1GHz) ..... 40
10.1. EUT Operation ..... 42
10.2. Test Setup ..... 42
10.3. Test Data ..... 43
APPENDIX I -- TEST SETUP PHOTOGRAPH ..... 45
APPENDIX II -- EXTERNAL PHOTOGRAPH ..... 45
APPENDIX III -- INTERNAL PHOTOGRAPH ..... 45

# TEST REPORT

| | | |
|---|---|---|
| Applicant | : | Minix Group Company Limited |
| Manufacturer | : | Minix Group Company Limited |
| Product Name | : | Portable Wireless CP & AA High-definition Touchscreen |
| Model No. | : | CP89-HD, CP89-HD Lite, CP89-HD Pro, CP123-HD, CP100-HD, CP123-HD Pro, CP100-HD Pro |
| Trade Mark | : | MINIX |
| Rating(s) | : | Input: 5-12V⎓ 1.2A Max |
| **Test Standard(s)** | : | **47 CFR Part 15E**<br>**ANSI C63.10-2020**<br>**KDB 789033 D02 General UNII Test Procedures New Rules v02r01** |

The device described above is tested by Shenzhen Anbotek Compliance Laboratory Limited to determine the maximum emission levels emanating from the device and the severe levels of the device can endure and its performance criterion. The measurement results are contained in this test report and Shenzhen Anbotek Compliance Laboratory Limited is assumed full of responsibility for the accuracy and completeness of these measurements. Also, this report shows that the EUT (Equipment Under Test) is technically compliant with above listed standard(s) requirements.
This report applies to above tested sample only and shall not be reproduced in part without written approval of Shenzhen Anbotek Compliance Laboratory Limited.

Date of Receipt: Aug. 09, 2024

Date of Test: Aug. 09, 2024 to Oct. 16, 2024

Prepared By: Tu Tu Hong
(TuTu Hong)

Approved & Authorized Signer: Kingkong Jin
(Kingkong Jin)

# Revision History

| Report Version | Description | Issued Date |
|---|---|---|
| R00 | Original Issue. | Nov. 05, 2024 |
| | | |
| | | |

# 1. General Information

## 1.1. Client Information

| | | |
|---|---|---|
| Applicant | : | Minix Group Company Limited |
| Address | : | Unit 1501, Chevalier Commercial Center, No.8 Wang Hoi Road, Kowloon Bay, Hong Kong,China |
| Manufacturer | : | Minix Group Company Limited |
| Address | : | Unit 1501, Chevalier Commercial Center, No.8 Wang Hoi Road, Kowloon Bay, Hong Kong,China |
| Factory | : | Minix Group Company Limited |
| Address | : | Unit 1501, Chevalier Commercial Center, No.8 Wang Hoi Road, Kowloon Bay, Hong Kong,China |

## 1.2. Description of Device (EUT)

| | | |
|---|---|---|
| Product Name | : | Portable Wireless CP & AA High-definition Touchscreen |
| Model No. | : | CP89-HD, CP89-HD Lite, CP89-HD Pro, CP123-HD, CP100-HD, CP123-HD Pro, CP100-HD Pro<br>(Note: All samples are the same except the model number, so we prepare "CP89-HD" for test only.) |
| Trade Mark | : | MINIX |
| Test Power Supply | : | DC 9V from Car charge input DC 12V |
| Test Sample No. | : | 1-2-1(Normal Sample), 1-2-2(Engineering Sample) |
| Adapter | : | MODEL: H520<br>INPUT: DC 12-24V<br>OUTPUT: WIRE ROD:DC 9V⎓ 2A<br>USB-A: DC 5V⎓ 2.4A |
| **RF Specification** | | |
| Operation Frequency | : | 802.11a/n(HT20)/ac(HT20)/ax(HEW20):<br>U-NII Band 1: 5180MHz to 5240MHz;<br>U-NII Band 3: 5745MHz to 5825MHz;<br><br>802.11n(HT40)/ac(HT40)/ax(HEW40):<br>U-NII Band 1: 5190MHz to 5230MHz;<br>U-NII Band 3: 5755MHz to 5795MHz; |
| Number of Channel | : | 802.11a/n(HT20)/ac(HT20)/ax(HEW20):<br>U-NII Band 1: 4;<br>U-NII Band 3: 5;<br><br>802.11n(HT40)/ac(HT40)/ax(HEW40):<br>U-NII Band 1: 2;<br>U-NII Band 3: 2; |
| Modulation Type | : | 802.11a: OFDM(BPSK, QPSK, 16QAM, 64QAM);<br>802.11n: OFDM (BPSK, QPSK, 16QAM, 64QAM);<br>802.11ac: OFDM (BPSK, QPSK, 16QAM, 64QAM, 256QAM);<br>802.11ax: OFDM (BPSK, QPSK, 16QAM, 64QAM, 256QAM, 1024QAM) |

| | | |
|---|---|---|
| Device Type | : | Client Devices |
| Antenna Type | : | 4.98dBi |
| Antenna Gain(Peak) | : | FPC Antenna |

**Remark:**
(1) All of the RF specification are provided by customer.
(2) For a more detailed features description, please refer to the manufacturer's specifications or the User's Manual.

## 1.3. Auxiliary Equipment Used During Test

| Title | Manufacturer | Model No. | Serial No. |
|---|---|---|---|
| DC ADAPTER | Shenzhen Huaiying Technology Co., Ltd. | H520 | / |

## 1.4. Operation channel list

Operation Band: U-NII Band 1

| Bandwidth: | 20MHz | Bandwidth: | 40MHz | Bandwidth: | 80MHz |
|---|---|---|---|---|---|
| Channel | Frequency (MHz) | Channel | Frequency (MHz) | Channel | Frequency (MHz) |
| 36 | 5180 | 38 | 5190 | / | / |
| 40 | 5200 | 46 | 5230 | / | / |
| 44 | 5220 | / | / | / | / |
| 48 | 5240 | / | / | / | / |

Operation Band: U-NII Band 3

| Bandwidth: | 20MHz | Bandwidth: | 40MHz | Bandwidth: | 80MHz |
|---|---|---|---|---|---|
| Channel | Frequency (MHz) | Channel | Frequency (MHz) | Channel | Frequency (MHz) |
| 149 | 5745 | 151 | 5755 | / | / |
| 153 | 5765 | 159 | 5795 | / | / |
| 157 | 5785 | / | / | / | / |
| 161 | 5805 | / | / | / | / |
| 165 | 5825 | / | / | / | / |

## 1.5. Description of Test Modes

| Pretest Modes | Descriptions |
|---|---|
| TM1 | Keep the EUT in continuously transmitting mode with 802.11a modulation type at lowest, middle and highest channel. All data rates has been tested and found the data rate @ 6Mbps is the worst case. Only the data of worst case is recorded in the report. |
| TM2 | Keep the EUT in continuously transmitting mode with 802.11n modulation type at lowest, middle and highest channel. All bandwidth and data rates has been tested and found the data rate @ MCS0 is the worst case. Only the data of worst case is recorded in the report. |
| TM3 | Keep the EUT in continuously transmitting mode with 802.11ac modulation type at lowest, middle and highest channel. All bandwidth and data rates has been tested and found the data rate @ MCS0 is the worst case. Only the data of worst case is recorded in the report. |
| TM4 | Keep the EUT in continuously transmitting mode with 802.11ax modulation type at lowest, middle and highest channel. All bandwidth and data rates has been tested and found the data rate @ MCS0 is the worst case. Only the data of worst case is recorded in the report. |

## 1.6. Measurement Uncertainty

| Parameter | Uncertainty |
|---|---|
| Conducted emissions (AMN 150kHz~30MHz) | 3.4dB |
| Dwell Time | 2% |
| Occupied Bandwidth | 925Hz |
| Conducted Output Power | 0.76dB |
| Power Spectral Density | 0.76dB |
| Conducted Spurious Emission | 1.24dB |
| Radiated spurious emissions (above 1GHz) | 1G-6GHz: 4.78dB;<br>6G-18GHz: 4.88dB<br>18G-40GHz: 5.68dB |
| Radiated emissions (Below 30MHz) | 3.53dB |
| Radiated spurious emissions (30MHz~1GHz) | Horizontal: 3.92dB; Vertical: 4.52dB |
| The measurement uncertainty and decision risk evaluated according to AB/WI-RF-F-032.<br>This uncertainty represents an expanded uncertainty expressed at approximately the 95% confidence level using a coverage factor of k=2. | |

## 1.7. Test Summary

| Test Items | Test Modes | Status |
|---|---|---|
| Conducted Emission at AC power line | / | N |
| Duty Cycle | Mode1,2,3,4 | P |
| Emission bandwidth and occupied bandwidth | Mode1,2,3,4 | P |
| Maximum conducted output power | Mode1,2,3,4 | P |
| Power spectral density | Mode1,2,3,4 | P |
| Band edge emissions (Conducted) | Mode1,2,3,4 | P |
| Band edge emissions (Radiated) | Mode1,2,3,4 | P |
| Undesirable emission limits (below 1GHz) | Mode1,2,3,4 | P |
| Undesirable emission limits (above 1GHz) | Mode1,2,3,4 | P |
| Note:<br>P: Pass<br>N: N/A, not applicable | | |

## 1.8. Description of Test Facility

The test facility is recognized, certified, or accredited by the following organizations:

**FCC-Registration No.:434132**
Shenzhen Anbotek Compliance Laboratory Limited, EMC Laboratory has been registered and fully described in a report filed with the (FCC) Federal Communications Commission. The acceptance letter from the FCC is maintained in our files. Registration No. 434132.

**ISED-Registration No.: 8058A**
Shenzhen Anbotek Compliance Laboratory Limited, EMC Laboratory has been registered and fully described in a report filed with the (ISED) Innovation, Science and Economic Development Canada. The acceptance letter from the ISED is maintained in our files. Registration 8058A.

**Test Location**
Shenzhen Anbotek Compliance Laboratory Limited.
Sogood Industrial Zone Laboratory & 1/F. of Building D, Sogood Science and Technology Park, Sanwei Community, Hangcheng Subdistrict, Bao'an District, Shenzhen, Guangdong, China.

## 1.9. Disclaimer

1. The test report is invalid if not marked with the signatures of the persons responsible for preparing and approving the test report.
2. The test report is invalid if there is any evidence and/or falsification.
3. The results documented in this report apply only to the tested sample, under the conditions and modes of operation as described herein.
4. This document may not be altered or revised in any way unless done so by Anbotek and all revisions are duly noted in the revisions section.
5. Content of the test report, in part or in full, cannot be used for publicity and/or promotional purposes without prior written approval from the laboratory.
6. The authenticity of the information provided by the customer is the responsibility of the customer and the laboratory is not responsible for its authenticity.

The laboratory is only responsible for the data released by the laboratory, except for the part provided by the applicant.

## 1.10. Test Equipment List

| Conducted Emission at AC power line | | | | | | |
|---|---|---|---|---|---|---|
| Item | Equipment | Manufacturer | Model No. | Serial No. | Last Cal. | Cal.Due Date |
| 1 | L.I.S.N. Artificial Mains Network | Rohde & Schwarz | ENV216 | 100055 | 2024-01-18 | 2025-01-17 |
| 2 | Three Phase V-type Artificial Power Network | CYBERTEK | EM5040DT | E215040DT001 | 2024-01-17 | 2025-01-16 |
| 3 | Software Name EZ-EMC | Farad Technology | ANB-03A | N/A | / | / |
| 4 | EMI Test Receiver | Rohde & Schwarz | ESPI3 | 100926 | 2024-09-09 | 2025-09-08 |

| Duty Cycle<br>Emission bandwidth and occupied bandwidth<br>Maximum conducted output power<br>Power spectral density<br>Band edge emissions (Conducted) | | | | | | |
|---|---|---|---|---|---|---|
| Item | Equipment | Manufacturer | Model No. | Serial No. | Last Cal. | Cal.Due Date |
| 1 | Constant Temperature Humidity Chamber | ZHONGJIAN | ZJ-KHWS80B | N/A | 2024-10-14 | 2025-10-13 |
| 2 | DC Power Supply | IVYTECH | IV3605 | 1804D360510 | 2023-10-20 | 2024-10-19 |
| 3 | Spectrum Analyzer | Rohde & Schwarz | FSV40-N | 102150 | 2024-05-06 | 2025-05-05 |
| 4 | MXA Spectrum Analysis | KEYSIGHT | N9020A | MY50531823 | 2024-02-22 | 2025-02-21 |
| 5 | Oscilloscope | Tektronix | MDO3012 | C020298 | 2024-10-10 | 2025-10-09 |
| 6 | MXG RF Vector Signal Generator | Agilent | N5182A | MY47420647 | 2024-02-04 | 2025-02-03 |

| Band edge emissions (Radiated)<br>Undesirable emission limits (above 1GHz) | | | | | | |
|---|---|---|---|---|---|---|
| Item | Equipment | Manufacturer | Model No. | Serial No. | Last Cal. | Cal.Due Date |
| 1 | EMI Test Receiver | Rohde & Schwarz | ESR26 | 101481 | 2024-01-23 | 2025-01-22 |
| 2 | EMI Preamplifier | SKET Electronic | LNPA-0118G-45 | SKET-PA-002 | 2024-01-17 | 2025-01-16 |
| 3 | Double Ridged Horn Antenna | SCHWARZBECK | BBHA 9120D | 02555 | 2022-10-16 | 2025-10-15 |
| 4 | EMI Test Software EZ-EMC | SHURPLE | N/A | N/A | / | / |
| 5 | Horn Antenna | A-INFO | LB-180400-KF | J211060628 | 2024-01-22 | 2027-01-21 |
| 6 | Spectrum Analyzer | Rohde & Schwarz | FSV40-N | 102150 | 2024-05-06 | 2025-05-05 |
| 7 | Amplifier | Talent Microwave | TLLA18G40G-50-30 | 23022802 | 2024-05-07 | 2025-05-06 |

| Undesirable emission limits (below 1GHz) | | | | | | |
|---|---|---|---|---|---|---|
| Item | Equipment | Manufacturer | Model No. | Serial No. | Last Cal. | Cal.Due Date |
| 1 | EMI Test Receiver | Rohde & Schwarz | ESR26 | 101481 | 2024-01-23 | 2025-01-22 |
| 2 | Pre-amplifier | SONOMA | 310N | 186860 | 2024-01-17 | 2025-01-16 |
| 3 | Bilog Broadband Antenna | Schwarzbeck | VULB9163 | 345 | 2022-10-23 | 2025-10-22 |
| 4 | Loop Antenna (9K-30M) | Schwarzbeck | FMZB1519 B | 00053 | 2024-09-12 | 2025-09-11 |
| 5 | EMI Test Software EZ-EMC | SHURPLE | N/A | N/A | / | / |

## 2. Conducted Emission at AC power line

| | |
|---|---|
| Test Requirement: | 47 CFR Part 15.207(a) |
| Test Limit: | Frequency of emission (MHz) / Conducted limit (dBμV): Quasi-peak / Average<br>0.15-0.5: 66 to 56* / 56 to 46*<br>0.5-5: 56 / 46<br>5-30: 60 / 50<br>*Decreases with the logarithm of the frequency. |
| Test Method: | ANSI C63.10-2020 section 6.2 |

### 2.1. EUT Operation

| | |
|---|---|
| Operating Environment: | |
| Test mode: | / |

### 2.2. Test Setup

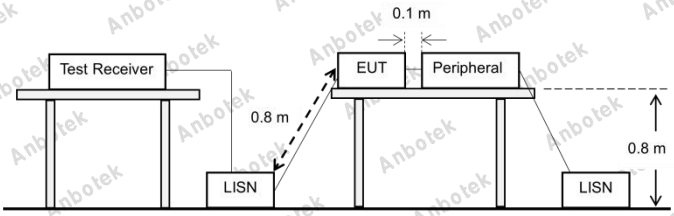


### 2.3. Test Data

Not applicable.
This is an in-vehicle device, which is intended to be installed on a vehicle only, not connect to the public utility under normal use.15.207 test is exempted.

## 3. Duty Cycle

| | |
|---|---|
| Test Requirement: | All measurements are to be performed with the EUT transmitting at 100% duty cycle at its maximum power control level; however, if 100% duty cycle cannot be achieved, measurements of duty cycle, x, and maximum-power transmission duration, T, are required for each tested mode of operation. |
| Test Limit: | No limits, only for report use. |
| Test Method: | ANSI C63.10-2020 section 12.2 (b) |
| Procedure: | i) Set the center frequency of the instrument to the center frequency of the transmission.<br>ii) Set RBW >= EBW if possible; otherwise, set RBW to the largest available value.<br>iii) Set VBW >= RBW.<br>iv) Set detector = peak.<br>v) The zero-span measurement method shall not be used unless both RBW and VBW are > 50/T, where T is defined in item a1) of 12.2, and the number of sweep points across duration T exceeds 100. |

### 3.1. EUT Operation

| Operating Environment: | |
|---|---|
| Test mode: | 1: 802.11a mode: Keep the EUT in continuously transmitting mode with 802.11a modulation type at lowest, middle and highest channel. All data rates has been tested and found the data rate @ 6Mbps is the worst case. Only the data of worst case is recorded in the report.<br>2: 802.11n mode: Keep the EUT in continuously transmitting mode with 802.11n modulation type at lowest, middle and highest channel. All bandwidth and data rates has been tested and found the data rate @ MCS0 is the worst case. Only the data of worst case is recorded in the report.<br>3: 802.11ac mode: Keep the EUT in continuously transmitting mode with 802.11ac modulation type at lowest, middle and highest channel. All bandwidth and data rates has been tested and found the data rate @ MCS0 is the worst case. Only the data of worst case is recorded in the report.<br>4: 802.11ax mode: Keep the EUT in continuously transmitting mode with 802.11ax modulation type at lowest, middle and highest channel. All bandwidth and data rates has been tested and found the data rate @ MCS0 is the worst case. Only the data of worst case is recorded in the report. |

### 3.2. Test Setup

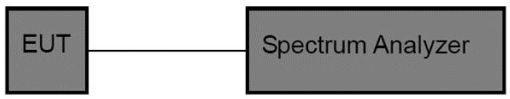


### 3.3. Test Data

| | | | | | |
|---|---|---|---|---|---|
| Temperature: | 23.7 °C | Humidity: | 50 % | Atmospheric Pressure: | 101 kPa |

Please Refer to Appendix for Details.

## 4. Emission bandwidth and occupied bandwidth

| | |
|---|---|
| Test Requirement: | U-NII 1, U-NII 2A, U-NII 2C: No limits, only for report use.<br><br>U-NII 3, U-NII 4: 47 CFR Part 15.407(e) |
| Test Limit: | U-NII 1, U-NII 2A, U-NII 2C: No limits, only for report use.<br><br>U-NII 3, U-NII 4: Within the 5.725-5.850 GHz and 5.850-5.895 GHz bands, the minimum 6 dB bandwidth of U-NII devices shall be at least 500 kHz. |
| Test Method: | ANSI C63.10-2020, section 6.9 & 12.5<br>KDB 789033 D02, Clause C.2 |
| Procedure: | Emission bandwidth:<br>a) Set RBW = approximately 1% of the emission bandwidth.<br>b) Set the VBW > RBW.<br>c) Detector = peak.<br>d) Trace mode = max hold.<br>e) Measure the maximum width of the emission that is 26 dB down from the peak of the emission.<br>Compare this with the RBW setting of the instrument. Readjust RBW and repeat measurement<br>as needed until the RBW/EBW ratio is approximately 1%.<br><br>Occupied bandwidth:<br>a) The instrument center frequency is set to the nominal EUT channel center frequency. The<br>frequency span for the spectrum analyzer shall be between 1.5 times and 5.0 times the OBW.<br>b) The nominal IF filter bandwidth (3 dB RBW) shall be in the range of 1% to 5% of the OBW,<br>and VBW shall be approximately three times the RBW, unless otherwise specified by the<br>applicable requirement.<br>c) Set the reference level of the instrument as required, keeping the signal from exceeding the<br>maximum input mixer level for linear operation. In general, the peak of the spectral envelope<br>shall be more than [10 log (OBW/RBW)] below the reference level. Specific guidance is given<br>in 4.1.5.2.<br>d) Step a) through step c) might require iteration to adjust within the specified range.<br>e) Video averaging is not permitted. Where practical, a sample detection and single sweep mode<br>shall be used. Otherwise, peak detection and max hold mode (until the trace stabilizes) shall be<br>used.<br>f) Use the 99% power bandwidth function of the instrument (if available) and report the measured<br>bandwidth.<br>g) If the instrument does not have a 99% power bandwidth function, then the trace data points are<br>recovered and directly summed in linear power terms. The recovered amplitude data points, |

| | |
|---|---|
| | beginning at the lowest frequency, are placed in a running sum until 0.5% of the total is reached;<br>that frequency is recorded as the lower frequency. The process is repeated until 99.5% of the<br>total is reached; that frequency is recorded as the upper frequency. The 99% power bandwidth is<br>the difference between these two frequencies.<br>h) The occupied bandwidth shall be reported by providing plot(s) of the measuring instrument<br>display; the plot axes and the scale units per division shall be clearly labeled. Tabular data may<br>be reported in addition to the plot(s).<br><br>6 dB emission bandwidth:<br>a) Set RBW = 100 kHz.<br>b) Set the video bandwidth (VBW) ≥ 3 >= RBW.<br>c) Detector = Peak.<br>d) Trace mode = max hold.<br>e) Sweep = auto couple.<br>f) Allow the trace to stabilize.<br>g) Measure the maximum width of the emission that is constrained by the frequencies associated with the two outermost amplitude points (upper and lower frequencies) that are attenuated by 6 dB relative to the maximum level measured in the fundamental emission. |

## 4.1. EUT Operation

| Operating Environment: | |
|---|---|
| Test mode: | 1: 802.11a mode: Keep the EUT in continuously transmitting mode with 802.11a modulation type at lowest, middle and highest channel. All data rates has been tested and found the data rate @ 6Mbps is the worst case. Only the data of worst case is recorded in the report.<br>2: 802.11n mode: Keep the EUT in continuously transmitting mode with 802.11n modulation type at lowest, middle and highest channel. All bandwidth and data rates has been tested and found the data rate @ MCS0 is the worst case. Only the data of worst case is recorded in the report.<br>3: 802.11ac mode: Keep the EUT in continuously transmitting mode with 802.11ac modulation type at lowest, middle and highest channel. All bandwidth and data rates has been tested and found the data rate @ MCS0 is the worst case. Only the data of worst case is recorded in the report.<br>4: 802.11ax mode: Keep the EUT in continuously transmitting mode with 802.11ax modulation type at lowest, middle and highest channel. All bandwidth and data rates has been tested and found the data rate @ MCS0 is the worst case. Only the data of worst case is recorded in the report. |

## 4.2. Test Setup

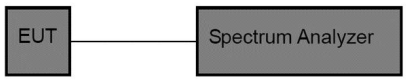


## 4.3. Test Data

| | | | | | |
|---|---|---|---|---|---|
| Temperature: | 23.7 °C | Humidity: | 50 % | Atmospheric Pressure: | 101 kPa |

Please Refer to Appendix for Details.

# 5. Maximum conducted output power

| | |
|---|---|
| Test Requirement: | 47 CFR Part 15.407(a)(1)(iv)<br>47 CFR Part 15.407(a)(3)(i) |
| Test Limit: | For client devices in the 5.15-5.25 GHz band, the maximum conducted output power over the frequency band of operation shall not exceed 250 mW provided the maximum antenna gain does not exceed 6 dBi.<br>If transmitting antennas of directional gain greater than 6 dBi are used, the maximum conducted output power shall be reduced by the amount in dB that the directional gain of the antenna exceeds 6 dBi.<br><br>For the band 5.725-5.850 GHz, the maximum conducted output power over the frequency band of operation shall not exceed 1 W.<br>If transmitting antennas of directional gain greater than 6 dBi are used, the maximum conducted output power shall be reduced by the amount in dB that the directional gain of the antenna exceeds 6 dBi.<br>However, fixed point-to-point U-NII devices operating in this band may employ transmitting antennas with directional gain greater than 6 dBi without any corresponding reduction in transmitter conducted power. Fixed, point-to-point operations exclude the use of point-to-multipoint systems, omnidirectional applications, and multiple collocated transmitters transmitting the same information. The operator of the U-NII device, or if the equipment is professionally installed, the installer, is responsible for ensuring that systems employing high gain directional antennas are used exclusively for fixed, point-to-point operations. |
| Test Method: | ANSI C63.10-2020, section 12.4 |
| Procedure: | Refer to ANSI C63.10-2020 section 12.4 |

## 5.1. EUT Operation

| Operating Environment: | |
|---|---|
| Test mode: | 1: 802.11a mode: Keep the EUT in continuously transmitting mode with 802.11a modulation type at lowest, middle and highest channel. All data rates has been tested and found the data rate @ 6Mbps is the worst case. Only the data of worst case is recorded in the report.<br>2: 802.11n mode: Keep the EUT in continuously transmitting mode with 802.11n modulation type at lowest, middle and highest channel. All bandwidth and data rates has been tested and found the data rate @ MCS0 is the worst case. Only the data of worst case is recorded in the report.<br>3: 802.11ac mode: Keep the EUT in continuously transmitting mode with 802.11ac modulation type at lowest, middle and highest channel. All bandwidth and data rates has been tested and found the data rate @ MCS0 is the worst case. Only the data of worst case is recorded in the report.<br>4: 802.11ax mode: Keep the EUT in continuously transmitting mode with 802.11ax modulation type at lowest, middle and highest channel. All bandwidth and data rates has been tested and found the data rate @ MCS0 is the worst case. Only the data of worst case is recorded in the report. |

## 5.2. Test Setup

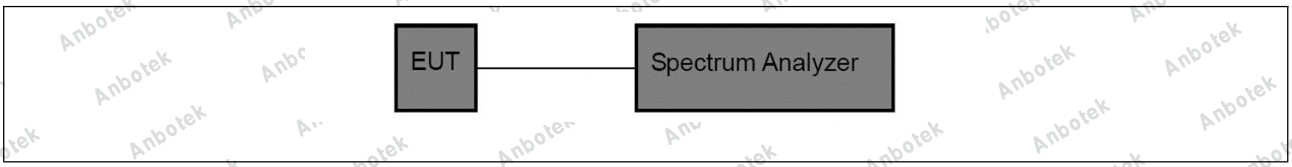


## 5.3. Test Data

| | | | | | |
|---|---|---|---|---|---|
| Temperature: | 23.7 °C | Humidity: | 50 % | Atmospheric Pressure: | 101 kPa |

Please Refer to Appendix for Details.

# 6. Power spectral density

| | |
|---|---|
| Test Requirement: | 47 CFR Part 15.407(a)(1)(iv)<br>47 CFR Part 15.407(a)(3)(i) |
| Test Limit: | For client devices in the 5.15-5.25 GHz band, the maximum power spectral density shall not exceed 11 dBm in any 1 megahertz band.<br>If transmitting antennas of directional gain greater than 6 dBi are used, the maximum power spectral density shall be reduced by the amount in dB that the directional gain of the antenna exceeds 6 dBi.<br><br>For the band 5.725-5.850 GHz, the maximum power spectral density shall not exceed 30 dBm in any 500-kHz band.<br>If transmitting antennas of directional gain greater than 6 dBi are used, the maximum power spectral density shall be reduced by the amount in dB that the directional gain of the antenna exceeds 6 dBi. However, fixed point-to-point U-NII devices operating in this band may employ transmitting antennas with directional gain greater than 6 dBi without any corresponding reduction in transmitter conducted power.<br>Fixed, point-to-point operations exclude the use of point-to-multipoint systems, omnidirectional applications, and multiple collocated transmitters transmitting the same information. The operator of the U-NII device, or if the equipment is professionally installed, the installer, is responsible for ensuring that systems employing high gain directional antennas are used exclusively for fixed, point-to-point operations. |
| Test Method: | ANSI C63.10-2020, section 12.6 |
| Procedure: | Refer to ANSI C63.10-2020, section 12.6 |

## 6.1. EUT Operation

| Operating Environment: | |
|---|---|
| Test mode: | 1: 802.11a mode: Keep the EUT in continuously transmitting mode with 802.11a modulation type at lowest, middle and highest channel. All data rates has been tested and found the data rate @ 6Mbps is the worst case. Only the data of worst case is recorded in the report.<br>2: 802.11n mode: Keep the EUT in continuously transmitting mode with 802.11n modulation type at lowest, middle and highest channel. All bandwidth and data rates has been tested and found the data rate @ MCS0 is the worst case. Only the data of worst case is recorded in the report.<br>3: 802.11ac mode: Keep the EUT in continuously transmitting mode with 802.11ac modulation type at lowest, middle and highest channel. All bandwidth and data rates has been tested and found the data rate @ MCS0 is the worst case. Only the data of worst case is recorded in the report.<br>4: 802.11ax mode: Keep the EUT in continuously transmitting mode with 802.11ax modulation type at lowest, middle and highest channel. All bandwidth and data rates has been tested and found the data rate @ MCS0 is the worst case. Only the data of worst case is recorded in the report. |

## 6.2. Test Setup

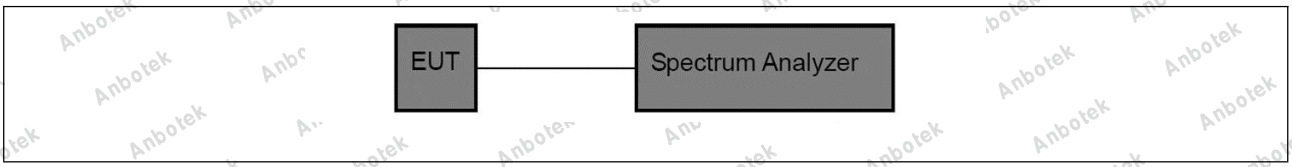


## 6.3. Test Data

| | | | | | |
|---|---|---|---|---|---|
| Temperature: | 23.7 °C | Humidity: | 50 % | Atmospheric Pressure: | 101 kPa |

Please Refer to Appendix for Details.

## 7. Band edge emissions (Conducted)

| | |
|---|---|
| Test Requirement: | 47 CFR Part 15.407(b)(1)<br>47 CFR Part 15.407(b)(4)<br>47 CFR Part 15.407(b)(10) |
| Test Limit: | For transmitters operating in the 5.15-5.25 GHz band: All emissions outside of the 5.15-5.35 GHz band shall not exceed an e.i.r.p. of −27 dBm/MHz.<br><br>For transmitters operating solely in the 5.725-5.850 GHz band:<br>All emissions shall be limited to a level of −27 dBm/MHz at 75 MHz or more above or below the band edge increasing linearly to 10 dBm/MHz at 25 MHz above or below the band edge, and from 25 MHz above or below the band edge increasing linearly to a level of 15.6 dBm/MHz at 5 MHz above or below the band edge, and from 5 MHz above or below the band edge increasing linearly to a level of 27 dBm/MHz at the band edge. |

| MHz | MHz | MHz | GHz |
|---|---|---|---|
| 0.090-0.110 | 16.42-16.423 | 399.9-410 | 4.5-5.15 |
| [1] 0.495-0.505 | 16.69475-16.69525 | 608-614 | 5.35-5.46 |
| 2.1735-2.1905 | 16.80425-16.80475 | 960-1240 | 7.25-7.75 |
| 4.125-4.128 | 25.5-25.67 | 1300-1427 | 8.025-8.5 |
| 4.17725-4.17775 | 37.5-38.25 | 1435-1626.5 | 9.0-9.2 |
| 4.20725-4.20775 | 73-74.6 | 1645.5-1646.5 | 9.3-9.5 |
| 6.215-6.218 | 74.8-75.2 | 1660-1710 | 10.6-12.7 |
| 6.26775-6.26825 | 108-121.94 | 1718.8-1722.2 | 13.25-13.4 |
| 6.31175-6.31225 | 123-138 | 2200-2300 | 14.47-14.5 |
| 8.291-8.294 | 149.9-150.05 | 2310-2390 | 15.35-16.2 |
| 8.362-8.366 | 156.52475-156.52525 | 2483.5-2500 | 17.7-21.4 |
| 8.37625-8.38675 | 156.7-156.9 | 2690-2900 | 22.01-23.12 |
| 8.41425-8.41475 | 162.0125-167.17 | 3260-3267 | 23.6-24.0 |
| 12.29-12.293 | 167.72-173.2 | 3332-3339 | 31.2-31.8 |
| 12.51975-12.52025 | 240-285 | 3345.8-3358 | 36.43-36.5 |
| 12.57675-12.57725 | 322-335.4 | 3600-4400 | ([2]) |
| 13.36-13.41 | | | |

[1] Until February 1, 1999, this restricted band shall be 0.490-0.510 MHz.

[2] Above 38.6

The field strength of emissions appearing within these frequency bands shall not exceed the limits shown in § 15.209. At frequencies equal to or less than 1000 MHz, compliance with the limits in § 15.209shall be demonstrated using measurement instrumentation employing a CISPR quasi-peak detector. Above 1000 MHz, compliance with the emission limits in § 15.209shall be demonstrated based on the average value of the measured emissions. The provisions in § 15.35apply to these measurements.

Except as provided elsewhere in this subpart, the emissions from an intentional radiator shall not exceed the field strength levels specified in the

following table:

| Frequency (MHz) | Field strength (microvolts/meter) | Measurement distance (meters) |
|---|---|---|
| 0.009-0.490 | 2400/F(kHz) | 300 |
| 0.490-1.705 | 24000/F(kHz) | 30 |
| 1.705-30.0 | 30 | 30 |
| 30-88 | 100 ** | 3 |
| 88-216 | 150 ** | 3 |
| 216-960 | 200 ** | 3 |
| Above 960 | 500 | 3 |

** Except as provided in paragraph (g), fundamental emissions from intentional radiators operating under this section shall not be located in the frequency bands 54-72 MHz, 76-88 MHz, 174-216 MHz or 470-806 MHz. However, operation within these frequency bands is permitted under other sections of this part, e.g., §§ 15.231 and 15.241.
In the emission table above, the tighter limit applies at the band edges.
The emission limits shown in the above table are based on measurements employing a CISPR quasi-peak detector except for the frequency bands 9–90 kHz, 110–490 kHz and above 1000 MHz. Radiated emission limits in these three bands are based on measurements employing an average detector.

Test Method: ANSI C63.10-2020, section 12.7.4, 12.7.6, 12.7.7

Procedure:

Above 1GHz:
a. For above 1GHz, the EUT was placed on the top of a rotating table 1.5 meters above the ground at a 3 meter fully-anechoic chamber. The table was rotated 360 degrees to determine the position of the highest radiation.
b. The EUT was set 3 meters away from the interference-receiving antenna, which was mounted on the top of a variable-height antenna tower.
c. The antenna height is varied from one meter to four meters above the ground to determine the maximum value of the field strength. Both horizontal and vertical polarizations of the antenna are set to make the measurement.
d. For each suspected emission, the EUT was arranged to its worst case and then the antenna was tuned to heights from 1 meter to 4 meters (for the test frequency of below 30MHz, the antenna was tuned to heights 1 meter) and the rotatable table was turned from 0 degrees to 360 degrees to find the maximum reading.
e. The test-receiver system was set to Peak Detect Function and Specified Bandwidth with Maximum Hold Mode.
f. If the emission level of the EUT in peak mode was 10dB lower than the limit specified, then testing could be stopped and the peak values of the EUT would be reported. Otherwise the emissions that did not have 10dB margin would be re-tested one by one using peak or average method as specified and then reported in a data sheet.
g. Test the EUT in the lowest channel, the middle channel, the Highest channel.
h. The radiation measurements are performed in X, Y, Z axis positioning for Transmitting mode, and found the X axis positioning which it is the worst case.
i. Repeat above procedures until all frequencies measured was complete.
Remark:
1. Level= Read Level+ Cable Loss+ Antenna Factor- Preamp Factor
2. Scan from 18GHz to 40GHz, the disturbance above 18GHz was very low.

| | |
|---|---|
| | The points marked on above plots are the highest emissions could be found when testing, so only above points had been displayed. The amplitude of spurious emissions from the radiator which are attenuated more than 20dB below the limit need not be reported.<br>3. As shown in this section, for frequencies above 1GHz, the field strength limits are based on average limits. However, the peak field strength of any emission shall not exceed the maximum permitted average limits specified above by more than 20 dB under any condition of modulation. For the emissions whose peak level is lower than the average limit, only the peak measurement is shown in the report.<br>4. The disturbance above 18GHz were very low and the harmonics were the highest point could be found when testing, so only the above harmonics had been displayed. |

## 7.1. EUT Operation

| Operating Environment: | |
|---|---|
| Test mode: | 1: 802.11a mode: Keep the EUT in continuously transmitting mode with 802.11a modulation type at lowest, middle and highest channel. All data rates has been tested and found the data rate @ 6Mbps is the worst case. Only the data of worst case is recorded in the report.<br>2: 802.11n mode: Keep the EUT in continuously transmitting mode with 802.11n modulation type at lowest, middle and highest channel. All bandwidth and data rates has been tested and found the data rate @ MCS0 is the worst case. Only the data of worst case is recorded in the report.<br>3: 802.11ac mode: Keep the EUT in continuously transmitting mode with 802.11ac modulation type at lowest, middle and highest channel. All bandwidth and data rates has been tested and found the data rate @ MCS0 is the worst case. Only the data of worst case is recorded in the report.<br>4: 802.11ax mode: Keep the EUT in continuously transmitting mode with 802.11ax modulation type at lowest, middle and highest channel. All bandwidth and data rates has been tested and found the data rate @ MCS0 is the worst case. Only the data of worst case is recorded in the report. |

## 7.2. Test Setup

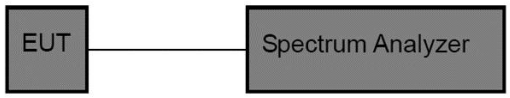


## 7.3. Test Data

| | | | | | |
|---|---|---|---|---|---|
| Temperature: | 23.7 °C | Humidity: | 50 % | Atmospheric Pressure: | 101 kPa |

Please Refer to Appendix for Details.

## 8. Band edge emissions (Radiated)

| | |
|---|---|
| Test Requirement: | 47 CFR Part 15.407(b)(1)<br>47 CFR Part 15.407(b)(4)<br>47 CFR Part 15.407(b)(10) |
| Test Limit: | For transmitters operating in the 5.15-5.25 GHz band: All emissions outside of the 5.15-5.35 GHz band shall not exceed an e.i.r.p. of −27 dBm/MHz.<br><br>For transmitters operating solely in the 5.725-5.850 GHz band:<br>All emissions shall be limited to a level of −27 dBm/MHz at 75 MHz or more above or below the band edge increasing linearly to 10 dBm/MHz at 25 MHz above or below the band edge, and from 25 MHz above or below the band edge increasing linearly to a level of 15.6 dBm/MHz at 5 MHz above or below the band edge, and from 5 MHz above or below the band edge increasing linearly to a level of 27 dBm/MHz at the band edge. |

| MHz | MHz | MHz | GHz |
|---|---|---|---|
| 0.090-0.110 | 16.42-16.423 | 399.9-410 | 4.5-5.15 |
| [1] 0.495-0.505 | 16.69475-16.69525 | 608-614 | 5.35-5.46 |
| 2.1735-2.1905 | 16.80425-16.80475 | 960-1240 | 7.25-7.75 |
| 4.125-4.128 | 25.5-25.67 | 1300-1427 | 8.025-8.5 |
| 4.17725-4.17775 | 37.5-38.25 | 1435-1626.5 | 9.0-9.2 |
| 4.20725-4.20775 | 73-74.6 | 1645.5-1646.5 | 9.3-9.5 |
| 6.215-6.218 | 74.8-75.2 | 1660-1710 | 10.6-12.7 |
| 6.26775-6.26825 | 108-121.94 | 1718.8-1722.2 | 13.25-13.4 |
| 6.31175-6.31225 | 123-138 | 2200-2300 | 14.47-14.5 |
| 8.291-8.294 | 149.9-150.05 | 2310-2390 | 15.35-16.2 |
| 8.362-8.366 | 156.52475-156.52525 | 2483.5-2500 | 17.7-21.4 |
| 8.37625-8.38675 | 156.7-156.9 | 2690-2900 | 22.01-23.12 |
| 8.41425-8.41475 | 162.0125-167.17 | 3260-3267 | 23.6-24.0 |
| 12.29-12.293 | 167.72-173.2 | 3332-3339 | 31.2-31.8 |
| 12.51975-12.52025 | 240-285 | 3345.8-3358 | 36.43-36.5 |
| 12.57675-12.57725 | 322-335.4 | 3600-4400 | ([2]) |
| 13.36-13.41 | | | |

[1] Until February 1, 1999, this restricted band shall be 0.490-0.510 MHz.

[2] Above 38.6

The field strength of emissions appearing within these frequency bands shall not exceed the limits shown in § 15.209. At frequencies equal to or less than 1000 MHz, compliance with the limits in § 15.209shall be demonstrated using measurement instrumentation employing a CISPR quasi-peak detector. Above 1000 MHz, compliance with the emission limits in § 15.209shall be demonstrated based on the average value of the measured emissions. The provisions in § 15.35apply to these measurements.

Except as provided elsewhere in this subpart, the emissions from an intentional radiator shall not exceed the field strength levels specified in the

following table:

| Frequency (MHz) | Field strength (microvolts/meter) | Measurement distance (meters) |
|---|---|---|
| 0.009-0.490 | 2400/F(kHz) | 300 |
| 0.490-1.705 | 24000/F(kHz) | 30 |
| 1.705-30.0 | 30 | 30 |
| 30-88 | 100 ** | 3 |
| 88-216 | 150 ** | 3 |
| 216-960 | 200 ** | 3 |
| Above 960 | 500 | 3 |

** Except as provided in paragraph (g), fundamental emissions from intentional radiators operating under this section shall not be located in the frequency bands 54-72 MHz, 76-88 MHz, 174-216 MHz or 470-806 MHz. However, operation within these frequency bands is permitted under other sections of this part, e.g., §§ 15.231 and 15.241.
In the emission table above, the tighter limit applies at the band edges.
The emission limits shown in the above table are based on measurements employing a CISPR quasi-peak detector except for the frequency bands 9–90 kHz, 110–490 kHz and above 1000 MHz. Radiated emission limits in these three bands are based on measurements employing an average detector.

Test Method: ANSI C63.10-2020, section 12.7.4, 12.7.6, 12.7.7

Procedure:

Above 1GHz:
a. For above 1GHz, the EUT was placed on the top of a rotating table 1.5 meters above the ground at a 3 meter fully-anechoic chamber. The table was rotated 360 degrees to determine the position of the highest radiation.
b. The EUT was set 3 meters away from the interference-receiving antenna, which was mounted on the top of a variable-height antenna tower.
c. The antenna height is varied from one meter to four meters above the ground to determine the maximum value of the field strength. Both horizontal and vertical polarizations of the antenna are set to make the measurement.
d. For each suspected emission, the EUT was arranged to its worst case and then the antenna was tuned to heights from 1 meter to 4 meters (for the test frequency of below 30MHz, the antenna was tuned to heights 1 meter) and the rotatable table was turned from 0 degrees to 360 degrees to find the maximum reading.
e. The test-receiver system was set to Peak Detect Function and Specified Bandwidth with Maximum Hold Mode.
f. If the emission level of the EUT in peak mode was 10dB lower than the limit specified, then testing could be stopped and the peak values of the EUT would be reported. Otherwise the emissions that did not have 10dB margin would be re-tested one by one using peak or average method as specified and then reported in a data sheet.
g. Test the EUT in the lowest channel, the middle channel, the Highest channel.
h. The radiation measurements are performed in X, Y, Z axis positioning for Transmitting mode, and found the X axis positioning which it is the worst case.
i. Repeat above procedures until all frequencies measured was complete.
Remark:
1. Level= Read Level+ Cable Loss+ Antenna Factor- Preamp Factor
2. Scan from 18GHz to 40GHz, the disturbance above 18GHz was very low.

| | |
|---|---|
| | The points marked on above plots are the highest emissions could be found when testing, so only above points had been displayed. The amplitude of spurious emissions from the radiator which are attenuated more than 20dB below the limit need not be reported.<br>3. As shown in this section, for frequencies above 1GHz, the field strength limits are based on average limits. However, the peak field strength of any emission shall not exceed the maximum permitted average limits specified above by more than 20 dB under any condition of modulation. For the emissions whose peak level is lower than the average limit, only the peak measurement is shown in the report.<br>4. The disturbance above 18GHz were very low and the harmonics were the highest point could be found when testing, so only the above harmonics had been displayed. |

## 8.1. EUT Operation

| Operating Environment: | |
|---|---|
| Test mode: | 1: 802.11a mode: Keep the EUT in continuously transmitting mode with 802.11a modulation type at lowest, middle and highest channel. All data rates has been tested and found the data rate @ 6Mbps is the worst case. Only the data of worst case is recorded in the report.<br>2: 802.11n mode: Keep the EUT in continuously transmitting mode with 802.11n modulation type at lowest, middle and highest channel. All bandwidth and data rates has been tested and found the data rate @ MCS0 is the worst case. Only the data of worst case is recorded in the report.<br>3: 802.11ac mode: Keep the EUT in continuously transmitting mode with 802.11ac modulation type at lowest, middle and highest channel. All bandwidth and data rates has been tested and found the data rate @ MCS0 is the worst case. Only the data of worst case is recorded in the report.<br>4: 802.11ax mode: Keep the EUT in continuously transmitting mode with 802.11ax modulation type at lowest, middle and highest channel. All bandwidth and data rates has been tested and found the data rate @ MCS0 is the worst case. Only the data of worst case is recorded in the report. |

## 8.2. Test Setup

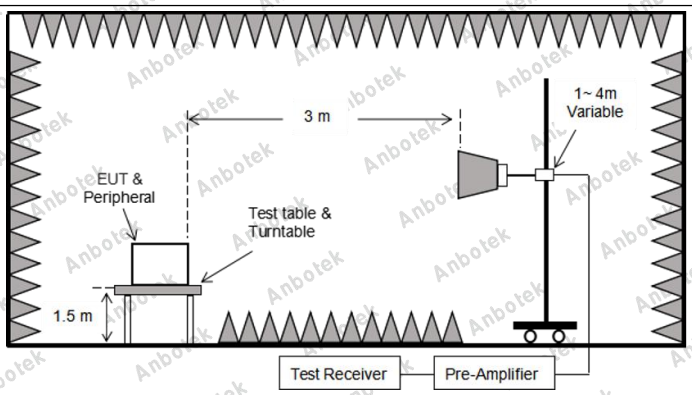

## 8.3. Test Data

| Temperature: | 23.7 °C | Humidity: | 50 % | Atmospheric Pressure: | 101 kPa |
|---|---|---|---|---|---|

| TM1 / Band: 5150-5250 MHz / BW: 20 / L | | | | | | | |
|---|---|---|---|---|---|---|---|
| Frequency (MHz) | Reading (dBuV) | Factor (dB/m) | Result (dBuV/m) | Limit (dBuV/m) | Over limit (dB) | Antenna Pol. | Detector |
| 5150.00 | 36.85 | 15.99 | 52.84 | 68.20 | -15.36 | H | Peak |
| 5150.00 | 38.90 | 15.99 | 54.89 | 68.20 | -13.31 | V | Peak |
| 5150.00 | 26.82 | 15.99 | 42.81 | 54.00 | -11.19 | H | AVG |
| 5150.00 | 28.84 | 15.99 | 44.83 | 54.00 | -9.17 | V | AVG |
| **TM1 / Band: 5150-5250 MHz / BW: 20 / H** | | | | | | | |
| Frequency (MHz) | Reading (dBuV) | Factor (dB/m) | Result (dBuV/m) | Limit (dBuV/m) | Over limit (dB) | Antenna Pol. | Detector |
| 5250.00 | 37.33 | 16.43 | 53.76 | 68.20 | -14.44 | H | Peak |
| 5250.00 | 40.20 | 16.43 | 56.63 | 68.20 | -11.57 | V | Peak |
| 5250.00 | 28.61 | 16.43 | 45.04 | 54.00 | -8.96 | H | AVG |
| 5250.00 | 29.55 | 16.43 | 45.98 | 54.00 | -8.02 | V | AVG |

Remark: 1. Result=Reading + Factor

| TM2 / Band: 5150-5250 MHz / BW: 20 / L | | | | | | | |
|---|---|---|---|---|---|---|---|
| Frequency (MHz) | Reading (dBuV) | Factor (dB/m) | Result (dBuV/m) | Limit (dBuV/m) | Over limit (dB) | Antenna Pol. | Detector |
| 5150.00 | 35.84 | 15.99 | 51.83 | 68.20 | -16.37 | H | Peak |
| 5150.00 | 37.20 | 15.99 | 53.19 | 68.20 | -15.01 | V | Peak |
| 5150.00 | 26.56 | 15.99 | 42.55 | 54.00 | -11.45 | H | AVG |
| 5150.00 | 27.57 | 15.99 | 43.56 | 54.00 | -10.44 | V | AVG |
| **TM2 / Band: 5150-5250 MHz / BW: 20 / H** | | | | | | | |
| Frequency (MHz) | Reading (dBuV) | Factor (dB/m) | Result (dBuV/m) | Limit (dBuV/m) | Over limit (dB) | Antenna Pol. | Detector |
| 5250.00 | 37.64 | 16.43 | 54.07 | 68.20 | -14.13 | H | Peak |
| 5250.00 | 38.70 | 16.43 | 55.13 | 68.20 | -13.07 | V | Peak |
| 5250.00 | 27.66 | 16.43 | 44.09 | 54.00 | -9.91 | H | AVG |
| 5250.00 | 29.08 | 16.43 | 45.51 | 54.00 | -8.49 | V | AVG |

Remark: 1. Result=Reading + Factor

| TM2 / Band: 5150-5250 MHz / BW: 40 / L | | | | | | | |
|---|---|---|---|---|---|---|---|
| Frequency (MHz) | Reading (dBuV) | Factor (dB/m) | Result (dBuV/m) | Limit (dBuV/m) | Over limit (dB) | Antenna Pol. | Detector |
| 5150.00 | 36.33 | 15.99 | 52.32 | 68.20 | -15.88 | H | Peak |
| 5150.00 | 38.19 | 15.99 | 54.18 | 68.20 | -14.02 | V | Peak |
| 5150.00 | 26.89 | 15.99 | 42.88 | 54.00 | -11.12 | H | AVG |
| 5150.00 | 28.69 | 15.99 | 44.68 | 54.00 | -9.32 | V | AVG |
| **TM2 / Band: 5150-5250 MHz / BW: 40 / H** | | | | | | | |
| Frequency (MHz) | Reading (dBuV) | Factor (dB/m) | Result (dBuV/m) | Limit (dBuV/m) | Over limit (dB) | Antenna Pol. | Detector |
| 5250.00 | 37.98 | 16.43 | 54.41 | 68.20 | -13.79 | H | Peak |
| 5250.00 | 36.89 | 16.43 | 53.32 | 68.20 | -14.88 | V | Peak |
| 5250.00 | 28.14 | 16.43 | 44.57 | 54.00 | -9.43 | H | AVG |
| 5250.00 | 29.32 | 16.43 | 45.75 | 54.00 | -8.25 | V | AVG |

Remark: 1. Result=Reading + Factor

| TM3 / Band: 5150-5250 MHz / BW: 20 / L | | | | | | | |
|---|---|---|---|---|---|---|---|
| Frequency (MHz) | Reading (dBuV) | Factor (dB/m) | Result (dBuV/m) | Limit (dBuV/m) | Over limit (dB) | Antenna Pol. | Detector |
| 5150.00 | 36.78 | 15.99 | 52.77 | 68.20 | -15.43 | H | Peak |
| 5150.00 | 38.51 | 15.99 | 54.50 | 68.20 | -13.70 | V | Peak |
| 5150.00 | 26.47 | 15.99 | 42.46 | 54.00 | -11.54 | H | AVG |
| 5150.00 | 28.62 | 15.99 | 44.61 | 54.00 | -9.39 | V | AVG |
| **TM3 / Band: 5150-5250 MHz / BW: 20 / H** | | | | | | | |
| Frequency (MHz) | Reading (dBuV) | Factor (dB/m) | Result (dBuV/m) | Limit (dBuV/m) | Over limit (dB) | Antenna Pol. | Detector |
| 5250.00 | 37.79 | 16.43 | 54.22 | 68.20 | -13.98 | H | Peak |
| 5250.00 | 38.06 | 16.43 | 54.49 | 68.20 | -13.71 | V | Peak |
| 5250.00 | 27.68 | 16.43 | 44.11 | 54.00 | -9.89 | H | AVG |
| 5250.00 | 28.20 | 16.43 | 44.63 | 54.00 | -9.37 | V | AVG |

Remark: 1. Result=Reading + Factor

| TM3 / Band: 5150-5250 MHz / BW: 40 / L | | | | | | | |
|---|---|---|---|---|---|---|---|
| Frequency (MHz) | Reading (dBuV) | Factor (dB/m) | Result (dBuV/m) | Limit (dBuV/m) | Over limit (dB) | Antenna Pol. | Detector |
| 5150.00 | 35.74 | 15.99 | 51.73 | 68.20 | -16.47 | H | Peak |
| 5150.00 | 36.23 | 15.99 | 52.22 | 68.20 | -15.98 | V | Peak |
| 5150.00 | 25.87 | 15.99 | 41.86 | 54.00 | -12.14 | H | AVG |
| 5150.00 | 26.66 | 15.99 | 42.65 | 54.00 | -11.35 | V | AVG |
| **TM3 / Band: 5150-5250 MHz / BW: 40 / H** | | | | | | | |
| Frequency (MHz) | Reading (dBuV) | Factor (dB/m) | Result (dBuV/m) | Limit (dBuV/m) | Over limit (dB) | Antenna Pol. | Detector |
| 5250.00 | 37.91 | 16.43 | 54.34 | 68.20 | -13.86 | H | Peak |
| 5250.00 | 37.09 | 16.43 | 53.52 | 68.20 | -14.68 | V | Peak |
| 5250.00 | 27.40 | 16.43 | 43.83 | 54.00 | -10.17 | H | AVG |
| 5250.00 | 27.28 | 16.43 | 43.71 | 54.00 | -10.29 | V | AVG |

Remark: 1. Result=Reading + Factor

| TM4 / Band: 5150-5250 MHz / BW: 20 / L | | | | | | | |
|---|---|---|---|---|---|---|---|
| Frequency (MHz) | Reading (dBuV) | Factor (dB/m) | Result (dBuV/m) | Limit (dBuV/m) | Over limit (dB) | Antenna Pol. | Detector |
| 5150.00 | 36.81 | 15.99 | 52.80 | 68.20 | -15.40 | H | Peak |
| 5150.00 | 38.54 | 15.99 | 54.53 | 68.20 | -13.67 | V | Peak |
| 5150.00 | 26.49 | 15.99 | 42.48 | 54.00 | -11.52 | H | AVG |
| 5150.00 | 28.65 | 15.99 | 44.64 | 54.00 | -9.36 | V | AVG |
| **TM4 / Band: 5150-5250 MHz / BW: 20 / H** | | | | | | | |
| Frequency (MHz) | Reading (dBuV) | Factor (dB/m) | Result (dBuV/m) | Limit (dBuV/m) | Over limit (dB) | Antenna Pol. | Detector |
| 5250.00 | 37.81 | 16.43 | 54.24 | 68.20 | -13.96 | H | Peak |
| 5250.00 | 38.07 | 16.43 | 54.50 | 68.20 | -13.70 | V | Peak |
| 5250.00 | 27.70 | 16.43 | 44.13 | 54.00 | -9.87 | H | AVG |
| 5250.00 | 28.23 | 16.43 | 44.66 | 54.00 | -9.34 | V | AVG |

Remark: 1. Result=Reading + Factor

| TM4 / Band: 5150-5250 MHz / BW: 40 / L | | | | | | | |
|---|---|---|---|---|---|---|---|
| Frequency (MHz) | Reading (dBuV) | Factor (dB/m) | Result (dBuV/m) | Limit (dBuV/m) | Over limit (dB) | Antenna Pol. | Detector |
| 5150.00 | 35.77 | 15.99 | 51.76 | 68.20 | -16.44 | H | Peak |
| 5150.00 | 36.25 | 15.99 | 52.24 | 68.20 | -15.96 | V | Peak |
| 5150.00 | 25.90 | 15.99 | 41.89 | 54.00 | -12.11 | H | AVG |
| 5150.00 | 26.69 | 15.99 | 42.68 | 54.00 | -11.32 | V | AVG |
| **TM4 / Band: 5150-5250 MHz / BW: 40 / H** | | | | | | | |
| Frequency (MHz) | Reading (dBuV) | Factor (dB/m) | Result (dBuV/m) | Limit (dBuV/m) | Over limit (dB) | Antenna Pol. | Detector |
| 5250.00 | 37.93 | 16.43 | 54.36 | 68.20 | -13.84 | H | Peak |
| 5250.00 | 37.11 | 16.43 | 53.54 | 68.20 | -14.66 | V | Peak |
| 5250.00 | 27.42 | 16.43 | 43.85 | 54.00 | -10.15 | H | AVG |
| 5250.00 | 27.31 | 16.43 | 43.74 | 54.00 | -10.26 | V | AVG |

Remark: 1. Result=Reading + Factor

| TM1 / Band: 5725-5850 MHz / BW: 20 / L | | | | | | | |
|---|---|---|---|---|---|---|---|
| Frequency (MHz) | Reading (dBuV) | Factor (dB/m) | Result (dBuV/m) | Limit (dBuV/m) | Over limit (dB) | Antenna Pol. | Detector |
| 5725.00 | 37.97 | 16.37 | 54.34 | 68.20 | -13.86 | H | Peak |
| 5725.00 | 39.28 | 16.37 | 55.65 | 68.20 | -12.55 | V | Peak |
| 5725.00 | 28.89 | 16.70 | 45.59 | 54.00 | -8.41 | H | AVG |
| 5725.00 | 29.98 | 16.70 | 46.68 | 54.00 | -7.32 | V | AVG |
| **TM1 / Band: 5725-5850 MHz / BW: 20 / H** | | | | | | | |
| Frequency (MHz) | Reading (dBuV) | Factor (dB/m) | Result (dBuV/m) | Limit (dBuV/m) | Over limit (dB) | Antenna Pol. | Detector |
| 5850.00 | 38.88 | 17.21 | 56.09 | 68.20 | -12.11 | H | Peak |
| 5850.00 | 39.21 | 17.21 | 56.42 | 68.20 | -11.78 | V | Peak |
| 5850.00 | 28.90 | 17.21 | 46.11 | 54.00 | -7.89 | H | AVG |
| 5850.00 | 28.95 | 17.21 | 46.16 | 54.00 | -7.84 | V | AVG |

Remark: 1. Result=Reading + Factor

| TM2 / Band: 5725-5850 MHz / BW: 20 / L | | | | | | | |
|---|---|---|---|---|---|---|---|
| Frequency (MHz) | Reading (dBuV) | Factor (dB/m) | Result (dBuV/m) | Limit (dBuV/m) | Over limit (dB) | Antenna Pol. | Detector |
| 5725.00 | 37.93 | 17.05 | 54.98 | 68.20 | -13.22 | H | Peak |
| 5725.00 | 38.45 | 17.05 | 55.50 | 68.20 | -12.70 | V | Peak |
| 5725.00 | 27.49 | 17.05 | 44.54 | 54.00 | -9.46 | H | AVG |
| 5725.00 | 27.96 | 17.05 | 45.01 | 54.00 | -8.99 | V | AVG |
| **TM2 / Band: 5725-5850 MHz / BW: 20 / H** | | | | | | | |
| Frequency (MHz) | Reading (dBuV) | Factor (dB/m) | Result (dBuV/m) | Limit (dBuV/m) | Over limit (dB) | Antenna Pol. | Detector |
| 5850.00 | 37.12 | 17.21 | 54.33 | 68.20 | -13.87 | H | Peak |
| 5850.00 | 37.79 | 17.21 | 55.00 | 68.20 | -13.20 | V | Peak |
| 5850.00 | 27.34 | 17.21 | 44.55 | 54.00 | -9.45 | H | AVG |
| 5850.00 | 28.24 | 17.21 | 45.45 | 54.00 | -8.55 | V | AVG |

Remark: 1. Result=Reading + Factor

| TM2 / Band: 5725-5850 MHz / BW: 40 / L | | | | | | | |
|---|---|---|---|---|---|---|---|
| Frequency (MHz) | Reading (dBuV) | Factor (dB/m) | Result (dBuV/m) | Limit (dBuV/m) | Over limit (dB) | Antenna Pol. | Detector |
| 5725.00 | 37.51 | 17.05 | 54.56 | 68.20 | -13.64 | H | Peak |
| 5725.00 | 38.33 | 17.05 | 55.38 | 68.20 | -12.82 | V | Peak |
| 5725.00 | 26.88 | 17.05 | 43.93 | 54.00 | -10.07 | H | AVG |
| 5725.00 | 28.29 | 17.05 | 45.34 | 54.00 | -8.66 | V | AVG |
| **TM2 / Band: 5725-5850 MHz / BW: 40 / H** | | | | | | | |
| Frequency (MHz) | Reading (dBuV) | Factor (dB/m) | Result (dBuV/m) | Limit (dBuV/m) | Over limit (dB) | Antenna Pol. | Detector |
| 5850.00 | 37.87 | 17.21 | 55.08 | 68.20 | -13.12 | H | Peak |
| 5850.00 | 38.30 | 17.21 | 55.51 | 68.20 | -12.69 | V | Peak |
| 5850.00 | 28.02 | 17.21 | 45.23 | 54.00 | -8.77 | H | AVG |
| 5850.00 | 29.17 | 17.21 | 46.38 | 54.00 | -7.62 | V | AVG |

Remark: 1. Result=Reading + Factor

| TM3 / Band: 5725-5850 MHz / BW: 20 / L | | | | | | | |
|---|---|---|---|---|---|---|---|
| Frequency (MHz) | Reading (dBuV) | Factor (dB/m) | Result (dBuV/m) | Limit (dBuV/m) | Over limit (dB) | Antenna Pol. | Detector |
| 5725.00 | 37.19 | 17.05 | 54.24 | 68.20 | -13.96 | H | Peak |
| 5725.00 | 37.43 | 17.05 | 54.48 | 68.20 | -13.72 | V | Peak |
| 5725.00 | 28.16 | 17.05 | 45.21 | 54.00 | -8.79 | H | AVG |
| 5725.00 | 28.88 | 17.05 | 45.93 | 54.00 | -8.07 | V | AVG |
| **TM3 / Band: 5725-5850 MHz / BW: 20 / H** | | | | | | | |
| Frequency (MHz) | Reading (dBuV) | Factor (dB/m) | Result (dBuV/m) | Limit (dBuV/m) | Over limit (dB) | Antenna Pol. | Detector |
| 5850.00 | 37.93 | 17.21 | 55.14 | 68.20 | -13.06 | H | Peak |
| 5850.00 | 38.85 | 17.21 | 56.06 | 68.20 | -12.14 | V | Peak |
| 5850.00 | 27.84 | 17.21 | 45.05 | 54.00 | -8.95 | H | AVG |
| 5850.00 | 28.84 | 17.21 | 46.05 | 54.00 | -7.95 | V | AVG |

Remark: 1. Result=Reading + Factor

| TM3 / Band: 5725-5850 MHz / BW: 40 / L | | | | | | | |
|---|---|---|---|---|---|---|---|
| Frequency (MHz) | Reading (dBuV) | Factor (dB/m) | Result (dBuV/m) | Limit (dBuV/m) | Over limit (dB) | Antenna Pol. | Detector |
| 5725.00 | 36.15 | 17.05 | 53.20 | 68.20 | -15.00 | H | Peak |
| 5725.00 | 37.73 | 17.05 | 54.78 | 68.20 | -13.42 | V | Peak |
| 5725.00 | 27.44 | 17.05 | 44.49 | 54.00 | -9.51 | H | AVG |
| 5725.00 | 28.15 | 17.05 | 45.20 | 54.00 | -8.80 | V | AVG |
| **TM3 / Band: 5725-5850 MHz / BW: 40 / H** | | | | | | | |
| Frequency (MHz) | Reading (dBuV) | Factor (dB/m) | Result (dBuV/m) | Limit (dBuV/m) | Over limit (dB) | Antenna Pol. | Detector |
| 5850.00 | 37.52 | 17.21 | 54.73 | 68.20 | -13.47 | H | Peak |
| 5850.00 | 38.28 | 17.21 | 55.49 | 68.20 | -12.71 | V | Peak |
| 5850.00 | 27.50 | 17.21 | 44.71 | 54.00 | -9.29 | H | AVG |
| 5850.00 | 27.07 | 17.21 | 44.28 | 54.00 | -9.72 | V | AVG |

Remark: 1. Result=Reading + Factor

| TM4 / Band: 5725-5850 MHz / BW: 20 / L | | | | | | | |
|---|---|---|---|---|---|---|---|
| Frequency (MHz) | Reading (dBuV) | Factor (dB/m) | Result (dBuV/m) | Limit (dBuV/m) | Over limit (dB) | Antenna Pol. | Detector |
| 5725.00 | 38.09 | 16.37 | 54.46 | 68.20 | -13.74 | H | Peak |
| 5725.00 | 39.44 | 16.37 | 55.81 | 68.20 | -12.39 | V | Peak |
| 5725.00 | 28.97 | 16.70 | 45.67 | 54.00 | -8.33 | H | AVG |
| 5725.00 | 30.08 | 16.70 | 46.78 | 54.00 | -7.22 | V | AVG |
| **TM4 / Band: 5725-5850 MHz / BW: 20 / H** | | | | | | | |
| Frequency (MHz) | Reading (dBuV) | Factor (dB/m) | Result (dBuV/m) | Limit (dBuV/m) | Over limit (dB) | Antenna Pol. | Detector |
| 5850.00 | 39.02 | 17.21 | 56.23 | 68.20 | -11.97 | H | Peak |
| 5850.00 | 39.37 | 17.21 | 56.58 | 68.20 | -11.62 | V | Peak |
| 5850.00 | 29.02 | 17.21 | 46.23 | 54.00 | -7.77 | H | AVG |
| 5850.00 | 29.05 | 17.21 | 46.26 | 54.00 | -7.74 | V | AVG |

Remark: 1. Result=Reading + Factor

| TM4 / Band: 5725-5850 MHz / BW: 40 / L | | | | | | | |
|---|---|---|---|---|---|---|---|
| Frequency (MHz) | Reading (dBuV) | Factor (dB/m) | Result (dBuV/m) | Limit (dBuV/m) | Over limit (dB) | Antenna Pol. | Detector |
| 5725.00 | 38.05 | 17.05 | 55.10 | 68.20 | -13.10 | H | Peak |
| 5725.00 | 38.61 | 17.05 | 55.66 | 68.20 | -12.54 | V | Peak |
| 5725.00 | 27.55 | 17.05 | 44.60 | 54.00 | -9.40 | H | AVG |
| 5725.00 | 28.06 | 17.05 | 45.11 | 54.00 | -8.89 | V | AVG |
| **TM4 / Band: 5725-5850 MHz / BW: 40 / H** | | | | | | | |
| Frequency (MHz) | Reading (dBuV) | Factor (dB/m) | Result (dBuV/m) | Limit (dBuV/m) | Over limit (dB) | Antenna Pol. | Detector |
| 5850.00 | 37.26 | 17.21 | 54.47 | 68.20 | -13.73 | H | Peak |
| 5850.00 | 37.89 | 17.21 | 55.10 | 68.20 | -13.10 | V | Peak |
| 5850.00 | 27.50 | 17.21 | 44.71 | 54.00 | -9.29 | H | AVG |
| 5850.00 | 28.36 | 17.21 | 45.57 | 54.00 | -8.43 | V | AVG |

Remark: 1. Result=Reading + Factor

## 9. Undesirable emission limits (below 1GHz)

<table>
<tr><td>Test Requirement:</td><td>47 CFR Part 15.407(b)(9)</td></tr>
<tr><td>Test Limit:</td><td>Unwanted emissions below 1 GHz must comply with the general field strength limits set forth in § 15.209.<br><br>Except as provided elsewhere in this subpart, the emissions from an intentional radiator shall not exceed the field strength levels specified in the following table:
<table>
<tr><th>Frequency (MHz)</th><th>Field strength (microvolts/meter)</th><th>Measurement distance (meters)</th></tr>
<tr><td>0.009-0.490</td><td>2400/F(kHz)</td><td>300</td></tr>
<tr><td>0.490-1.705</td><td>24000/F(kHz)</td><td>30</td></tr>
<tr><td>1.705-30.0</td><td>30</td><td>30</td></tr>
<tr><td>30-88</td><td>100 **</td><td>3</td></tr>
<tr><td>88-216</td><td>150 **</td><td>3</td></tr>
<tr><td>216-960</td><td>200 **</td><td>3</td></tr>
<tr><td>Above 960</td><td>500</td><td>3</td></tr>
</table>
** Except as provided in paragraph (g), fundamental emissions from intentional radiators operating under this section shall not be located in the frequency bands 54-72 MHz, 76-88 MHz, 174-216 MHz or 470-806 MHz. However, operation within these frequency bands is permitted under other sections of this part, e.g., §§ 15.231 and 15.241.<br>In the emission table above, the tighter limit applies at the band edges.<br>The emission limits shown in the above table are based on measurements employing a CISPR quasi-peak detector except for the frequency bands 9–90 kHz, 110–490 kHz and above 1000 MHz. Radiated emission limits in these three bands are based on measurements employing an average detector.</td></tr>
<tr><td>Test Method:</td><td>ANSI C63.10-2020, section 12.7.4, 12.7.5</td></tr>
<tr><td>Procedure:</td><td>Below 1GHz:<br>a. For below 1GHz, the EUT was placed on the top of a rotating table 0.8 meters above the ground at a 3 meter semi-anechoic chamber. The table was rotated 360 degrees to determine the position of the highest radiation.<br>b. The EUT was set 3 or 10 meters away from the interference-receiving antenna, which was mounted on the top of a variable-height antenna tower.<br>c. The antenna height is varied from one meter to four meters above the ground to determine the maximum value of the field strength. Both horizontal and vertical polarizations of the antenna are set to make the measurement.<br>d. For each suspected emission, the EUT was arranged to its worst case and then the antenna was tuned to heights from 1 meter to 4 meters (for the test frequency of below 30MHz, the antenna was tuned to heights 1 meter) and the rotatable table was turned from 0 degrees to 360 degrees to find the maximum reading.<br>e. The test-receiver system was set to Peak Detect Function and Specified Bandwidth with Maximum Hold Mode.<br>f. If the emission level of the EUT in peak mode was 10dB lower than the limit specified, then testing could be stopped and the peak values of the EUT would be reported. Otherwise the emissions that did not have 10dB margin would be re-tested one by one using quasi-peak method as specified and then reported in a data sheet.<br>g. Test the EUT in the lowest channel, the middle channel, the Highest</td></tr>
</table>

| | |
|---|---|
| | channel.<br>h. The radiation measurements are performed in X, Y, Z axis positioning for Transmitting mode, and found the X axis positioning which it is the worst case.<br>i. Repeat above procedures until all frequencies measured was complete.<br>Remark:<br>1. Level= Read Level+ Cable Loss+ Antenna Factor- Preamp Factor<br>2. Scan from 9kHz to 30MHz, the disturbance below 30MHz was very low. The points marked on above plots are the highest emissions could be found when testing, so only above points had been displayed. The amplitude of spurious emissions from the radiator which are attenuated more than 20dB below the limit need not be reported.<br>3. The disturbance below 1GHz was very low and the harmonics were the highest point could be found when testing, so only the above harmonics had been displayed.<br><br>Above 1GHz:<br>a. For above 1GHz, the EUT was placed on the top of a rotating table 1.5 meters above the ground at a 3 meter fully-anechoic chamber. The table was rotated 360 degrees to determine the position of the highest radiation.<br>b. The EUT was set 3 meters away from the interference-receiving antenna, which was mounted on the top of a variable-height antenna tower.<br>c. The antenna height is varied from one meter to four meters above the ground to determine the maximum value of the field strength. Both horizontal and vertical polarizations of the antenna are set to make the measurement.<br>d. For each suspected emission, the EUT was arranged to its worst case and then the antenna was tuned to heights from 1 meter to 4 meters (for the test frequency of below 30MHz, the antenna was tuned to heights 1 meter) and the rotatable table was turned from 0 degrees to 360 degrees to find the maximum reading.<br>e. The test-receiver system was set to Peak Detect Function and Specified Bandwidth with Maximum Hold Mode.<br>f. If the emission level of the EUT in peak mode was 10dB lower than the limit specified, then testing could be stopped and the peak values of the EUT would be reported. Otherwise the emissions that did not have 10dB margin would be re-tested one by one using peak or average method as specified and then reported in a data sheet.<br>g. Test the EUT in the lowest channel, the middle channel, the Highest channel.<br>h. The radiation measurements are performed in X, Y, Z axis positioning for Transmitting mode, and found the X axis positioning which it is the worst case.<br>i. Repeat above procedures until all frequencies measured was complete.<br>Remark:<br>1. Level= Read Level+ Cable Loss+ Antenna Factor- Preamp Factor<br>2. Scan from 18GHz to 40GHz, the disturbance above 18GHz was very low. The points marked on above plots are the highest emissions could be found when testing, so only above points had been displayed. The amplitude of spurious emissions from the radiator which are attenuated more than 20dB below the limit need not be reported.<br>3. As shown in this section, for frequencies above 1GHz, the field strength limits are based on average limits. However, the peak field strength of any emission shall not exceed the maximum permitted average limits specified above by more than 20 dB under any condition of modulation. For the emissions whose peak level is lower than the average limit, only the peak |

| | |
|---|---|
| | measurement is shown in the report.<br>4. The disturbance above 18GHz were very low and the harmonics were the highest point could be found when testing, so only the above harmonics had been displayed. |

## 9.1. EUT Operation

| Operating Environment: | |
|---|---|
| Test mode: | 1: 802.11a mode: Keep the EUT in continuously transmitting mode with 802.11a modulation type at lowest, middle and highest channel. All data rates has been tested and found the data rate @ 6Mbps is the worst case. Only the data of worst case is recorded in the report.<br>2: 802.11n mode: Keep the EUT in continuously transmitting mode with 802.11n modulation type at lowest, middle and highest channel. All bandwidth and data rates has been tested and found the data rate @ MCS0 is the worst case. Only the data of worst case is recorded in the report.<br>3: 802.11ac mode: Keep the EUT in continuously transmitting mode with 802.11ac modulation type at lowest, middle and highest channel. All bandwidth and data rates has been tested and found the data rate @ MCS0 is the worst case. Only the data of worst case is recorded in the report.<br>4: 802.11ax mode: Keep the EUT in continuously transmitting mode with 802.11ax modulation type at lowest, middle and highest channel. All bandwidth and data rates has been tested and found the data rate @ MCS0 is the worst case. Only the data of worst case is recorded in the report. |

## 9.2. Test Setup

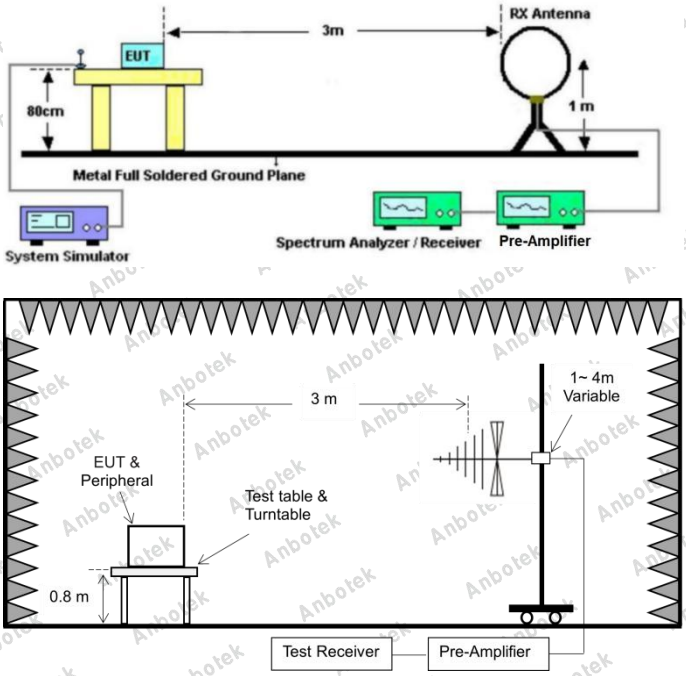

## 9.3. Test Data

The test results of 9kHz-30MHz was attenuated more than 20dB below the permissible limits, so the results don't record in the report.

| Temperature: | 20.3 °C | Humidity: | 46 % | Atmospheric Pressure: | 101 kPa |
|---|---|---|---|---|---|

TM2 / Polarization: Horizontal / Band: 5150-5250 MHz / BW: 20 / CH: L

| No. | Freq. (MHz) | Reading (dBuV) | Factor (dB/m) | Result (dBuV/m) | Limit (dBuV/m) | Over Limit (dB) | Detector | Height (cm) | degree (deg) | Remark |
|---|---|---|---|---|---|---|---|---|---|---|
| 1 | 121.9753 | 48.38 | -22.32 | 26.06 | 43.50 | -17.44 | QP | | | |
| 2 | 176.2684 | 58.69 | -21.67 | 37.02 | 43.50 | -6.48 | QP | | | |
| 3 | 228.4902 | 48.19 | -19.91 | 28.28 | 46.00 | -17.72 | QP | | | |
| 4 | 419.1080 | 53.06 | -14.15 | 38.91 | 46.00 | -7.09 | QP | | | |
| 5 | 463.9696 | 49.01 | -13.28 | 35.73 | 46.00 | -10.27 | QP | | | |
| 6 | 649.6597 | 50.18 | -10.67 | 39.51 | 46.00 | -6.49 | QP | | | |

| Temperature: | 20.3 °C | Humidity: | 46 % | Atmospheric Pressure: | 101 kPa |
|---|---|---|---|---|---|

TM2 / Polarization: Vertical / Band: 5150-5250 MHz / BW: 20 / CH: L

| No. | Freq. (MHz) | Reading (dBuV) | Factor (dB/m) | Result (dBuV/m) | Limit (dBuV/m) | Over Limit (dB) | Detector | Height (cm) | degree (deg) | Remark |
|---|---|---|---|---|---|---|---|---|---|---|
| 1 | 55.4147 | 37.86 | -17.62 | 20.24 | 40.00 | -19.76 | QP | | | |
| 2 | 176.2684 | 51.85 | -20.79 | 31.06 | 43.50 | -12.44 | QP | | | |
| 3 | 419.1080 | 53.18 | -14.15 | 39.03 | 46.00 | -6.97 | QP | | | |
| 4 | 550.9479 | 46.89 | -11.74 | 35.15 | 46.00 | -10.85 | QP | | | |
| 5 | 649.6597 | 42.15 | -10.67 | 31.48 | 46.00 | -14.52 | QP | | | |
| 6 | 952.0937 | 35.94 | -5.61 | 30.33 | 46.00 | -15.67 | QP | | | |

Note:Only record the worst data in the report.

## 10. Undesirable emission limits (above 1GHz)

| | |
|---|---|
| Test Requirement: | 47 CFR Part 15.407(b)(1)<br>47 CFR Part 15.407(b)(4)<br>47 CFR Part 15.407(b)(10) |
| Test Limit: | For transmitters operating in the 5.15-5.25 GHz band: All emissions outside of the 5.15-5.35 GHz band shall not exceed an e.i.r.p. of −27 dBm/MHz.<br><br>For transmitters operating solely in the 5.725-5.850 GHz band:<br>All emissions shall be limited to a level of −27 dBm/MHz at 75 MHz or more above or below the band edge increasing linearly to 10 dBm/MHz at 25 MHz above or below the band edge, and from 25 MHz above or below the band edge increasing linearly to a level of 15.6 dBm/MHz at 5 MHz above or below the band edge, and from 5 MHz above or below the band edge increasing linearly to a level of 27 dBm/MHz at the band edge. |

| MHz | MHz | MHz | GHz |
|---|---|---|---|
| 0.090-0.110 | 16.42-16.423 | 399.9-410 | 4.5-5.15 |
| [1] 0.495-0.505 | 16.69475-16.69525 | 608-614 | 5.35-5.46 |
| 2.1735-2.1905 | 16.80425-16.80475 | 960-1240 | 7.25-7.75 |
| 4.125-4.128 | 25.5-25.67 | 1300-1427 | 8.025-8.5 |
| 4.17725-4.17775 | 37.5-38.25 | 1435-1626.5 | 9.0-9.2 |
| 4.20725-4.20775 | 73-74.6 | 1645.5-1646.5 | 9.3-9.5 |
| 6.215-6.218 | 74.8-75.2 | 1660-1710 | 10.6-12.7 |
| 6.26775-6.26825 | 108-121.94 | 1718.8-1722.2 | 13.25-13.4 |
| 6.31175-6.31225 | 123-138 | 2200-2300 | 14.47-14.5 |
| 8.291-8.294 | 149.9-150.05 | 2310-2390 | 15.35-16.2 |
| 8.362-8.366 | 156.52475-156.52525 | 2483.5-2500 | 17.7-21.4 |
| 8.37625-8.38675 | 156.7-156.9 | 2690-2900 | 22.01-23.12 |
| 8.41425-8.41475 | 162.0125-167.17 | 3260-3267 | 23.6-24.0 |
| 12.29-12.293 | 167.72-173.2 | 3332-3339 | 31.2-31.8 |
| 12.51975-12.52025 | 240-285 | 3345.8-3358 | 36.43-36.5 |
| 12.57675-12.57725 | 322-335.4 | 3600-4400 | ([2]) |
| 13.36-13.41 | | | |

[1] Until February 1, 1999, this restricted band shall be 0.490-0.510 MHz.

[2] Above 38.6

The field strength of emissions appearing within these frequency bands shall not exceed the limits shown in § 15.209. At frequencies equal to or less than 1000 MHz, compliance with the limits in § 15.209shall be demonstrated using measurement instrumentation employing a CISPR quasi-peak detector. Above 1000 MHz, compliance with the emission limits in § 15.209shall be demonstrated based on the average value of the measured emissions. The provisions in § 15.35apply to these measurements.

Except as provided elsewhere in this subpart, the emissions from an intentional radiator shall not exceed the field strength levels specified in the

<table>
<tr><td></td><td>following table:
<table>
<tr><th>Frequency (MHz)</th><th>Field strength (microvolts/meter)</th><th>Measurement distance (meters)</th></tr>
<tr><td>0.009-0.490</td><td>2400/F(kHz)</td><td>300</td></tr>
<tr><td>0.490-1.705</td><td>24000/F(kHz)</td><td>30</td></tr>
<tr><td>1.705-30.0</td><td>30</td><td>30</td></tr>
<tr><td>30-88</td><td>100 **</td><td>3</td></tr>
<tr><td>88-216</td><td>150 **</td><td>3</td></tr>
<tr><td>216-960</td><td>200 **</td><td>3</td></tr>
<tr><td>Above 960</td><td>500</td><td>3</td></tr>
</table>
** Except as provided in paragraph (g), fundamental emissions from intentional radiators operating under this section shall not be located in the frequency bands 54-72 MHz, 76-88 MHz, 174-216 MHz or 470-806 MHz. However, operation within these frequency bands is permitted under other sections of this part, e.g., §§ 15.231 and 15.241.<br>In the emission table above, the tighter limit applies at the band edges.<br>The emission limits shown in the above table are based on measurements employing a CISPR quasi-peak detector except for the frequency bands 9–90 kHz, 110–490 kHz and above 1000 MHz. Radiated emission limits in these three bands are based on measurements employing an average detector.</td></tr>
<tr><td>Test Method:</td><td>ANSI C63.10-2020, section 12.7.4, 12.7.6, 12.7.7</td></tr>
<tr><td>Procedure:</td><td>Above 1GHz:<br>a. For above 1GHz, the EUT was placed on the top of a rotating table 1.5 meters above the ground at a 3 meter fully-anechoic chamber. The table was rotated 360 degrees to determine the position of the highest radiation.<br>b. The EUT was set 3 meters away from the interference-receiving antenna, which was mounted on the top of a variable-height antenna tower.<br>c. The antenna height is varied from one meter to four meters above the ground to determine the maximum value of the field strength. Both horizontal and vertical polarizations of the antenna are set to make the measurement.<br>d. For each suspected emission, the EUT was arranged to its worst case and then the antenna was tuned to heights from 1 meter to 4 meters (for the test frequency of below 30MHz, the antenna was tuned to heights 1 meter) and the rotatable table was turned from 0 degrees to 360 degrees to find the maximum reading.<br>e. The test-receiver system was set to Peak Detect Function and Specified Bandwidth with Maximum Hold Mode.<br>f. If the emission level of the EUT in peak mode was 10dB lower than the limit specified, then testing could be stopped and the peak values of the EUT would be reported. Otherwise the emissions that did not have 10dB margin would be re-tested one by one using peak or average method as specified and then reported in a data sheet.<br>g. Test the EUT in the lowest channel, the middle channel, the Highest channel.<br>h. The radiation measurements are performed in X, Y, Z axis positioning for Transmitting mode, and found the X axis positioning which it is the worst case.<br>i. Repeat above procedures until all frequencies measured was complete.<br>Remark:<br>1. Level= Read Level+ Cable Loss+ Antenna Factor- Preamp Factor<br>2. Scan from 18GHz to 40GHz, the disturbance above 18GHz was very low.</td></tr>
</table>

| | |
|---|---|
| | The points marked on above plots are the highest emissions could be found when testing, so only above points had been displayed. The amplitude of spurious emissions from the radiator which are attenuated more than 20dB below the limit need not be reported.<br>3. As shown in this section, for frequencies above 1GHz, the field strength limits are based on average limits. However, the peak field strength of any emission shall not exceed the maximum permitted average limits specified above by more than 20 dB under any condition of modulation. For the emissions whose peak level is lower than the average limit, only the peak measurement is shown in the report.<br>4. The disturbance above 18GHz were very low and the harmonics were the highest point could be found when testing, so only the above harmonics had been displayed. |

## 10.1. EUT Operation

| Operating Environment: | |
|---|---|
| Test mode: | 1: 802.11a mode: Keep the EUT in continuously transmitting mode with 802.11a modulation type at lowest, middle and highest channel. All data rates has been tested and found the data rate @ 6Mbps is the worst case. Only the data of worst case is recorded in the report.<br>2: 802.11n mode: Keep the EUT in continuously transmitting mode with 802.11n modulation type at lowest, middle and highest channel. All bandwidth and data rates has been tested and found the data rate @ MCS0 is the worst case. Only the data of worst case is recorded in the report.<br>3: 802.11ac mode: Keep the EUT in continuously transmitting mode with 802.11ac modulation type at lowest, middle and highest channel. All bandwidth and data rates has been tested and found the data rate @ MCS0 is the worst case. Only the data of worst case is recorded in the report.<br>4: 802.11ax mode: Keep the EUT in continuously transmitting mode with 802.11ax modulation type at lowest, middle and highest channel. All bandwidth and data rates has been tested and found the data rate @ MCS0 is the worst case. Only the data of worst case is recorded in the report. |

## 10.2. Test Setup

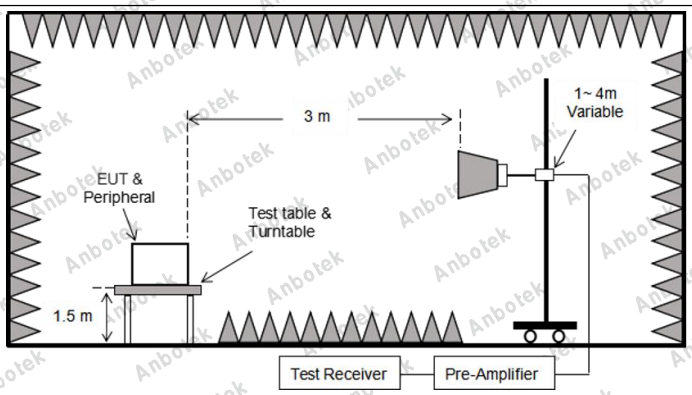

## 10.3. Test Data

| Temperature: | 23.7 °C | Humidity: | 50 % | Atmospheric Pressure: | 101 kPa |
|---|---|---|---|---|---|

| TM2 / Band: 5150-5250 MHz / BW: 20 / CH: L | | | | | | | |
|---|---|---|---|---|---|---|---|
| Frequency (MHz) | Reading (dBuV) | Factor (dB/m) | Result (dBuV/m) | Limit (dBuV/m) | Over limit (dB) | Antenna Pol. | Detector |
| 10360.00 | 31.36 | 23.81 | 55.17 | 68.20 | -13.03 | V | Peak |
| 15540.00 | 32.60 | 28.68 | 61.28 | 68.20 | -6.92 | V | Peak |
| 10360.00 | 31.61 | 23.81 | 55.42 | 68.20 | -12.78 | H | Peak |
| 15540.00 | 32.73 | 28.68 | 61.41 | 68.20 | -6.79 | H | Peak |
| 10360.00 | 20.651 | 23.81 | 44.46 | 54.00 | -9.54 | V | AVG |
| 15540.00 | 21.642 | 28.68 | 50.32 | 54.00 | -3.68 | V | AVG |
| 10360.00 | 20.802 | 23.81 | 44.61 | 54.00 | -9.39 | H | AVG |
| 15540.00 | 21.461 | 28.68 | 50.14 | 54.00 | -3.86 | H | AVG |
| **TM2 / Band: 5150-5250 MHz / BW: 20 / CH: M** | | | | | | | |
| Frequency (MHz) | Reading (dBuV) | Factor (dB/m) | Result (dBuV/m) | Limit (dBuV/m) | Over limit (dB) | Antenna Pol. | Detector |
| 10400.00 | 30.72 | 23.81 | 54.53 | 68.20 | -13.67 | V | Peak |
| 15600.00 | 32.13 | 29.13 | 61.26 | 68.20 | -6.94 | V | Peak |
| 10400.00 | 31.10 | 23.81 | 54.91 | 68.20 | -13.29 | H | Peak |
| 15600.00 | 32.25 | 29.13 | 61.38 | 68.20 | -6.82 | H | Peak |
| 10400.00 | 20.921 | 23.81 | 44.73 | 54.00 | -9.27 | V | AVG |
| 15600.00 | 21.762 | 29.13 | 50.89 | 54.00 | -3.11 | V | AVG |
| 10400.00 | 20.792 | 23.81 | 44.60 | 54.00 | -9.40 | H | AVG |
| 15600.00 | 21.541 | 29.13 | 50.67 | 54.00 | -3.33 | H | AVG |
| **TM2 / Band: 5150-5250 MHz / BW: 20 / CH: H** | | | | | | | |
| Frequency (MHz) | Reading (dBuV) | Factor (dB/m) | Result (dBuV/m) | Limit (dBuV/m) | Over limit (dB) | Antenna Pol. | Detector |
| 10480.00 | 30.29 | 23.80 | 54.09 | 68.20 | -14.11 | V | Peak |
| 15720.00 | 31.61 | 30.03 | 61.64 | 68.20 | -6.56 | V | Peak |
| 10480.00 | 30.74 | 23.80 | 54.54 | 68.20 | -13.66 | H | Peak |
| 15720.00 | 31.16 | 30.03 | 61.19 | 68.20 | -7.01 | H | Peak |
| 10480.00 | 19.59 | 23.80 | 43.39 | 54.00 | -10.61 | V | AVG |
| 15720.00 | 20.52 | 30.03 | 50.55 | 54.00 | -3.45 | V | AVG |
| 10480.00 | 20.00 | 23.80 | 43.80 | 54.00 | -10.20 | H | AVG |
| 15720.00 | 20.33 | 30.03 | 50.36 | 54.00 | -3.64 | H | AVG |

Remark:
1. Result =Reading + Factor
2. Only the worst case (802.11n(HT20)) is recorded in the report.
3. Test frequency are from 1GHz to 40GHz, the amplitude of spurious emissions which are attenuated more than 20 dB below the limits are not reported.

| TM1 / Band: 5725-5850 MHz / BW: 20 / CH: L | | | | | | | |
|---|---|---|---|---|---|---|---|
| Frequency (MHz) | Reading (dBuV) | Factor (dB/m) | Result (dBuV/m) | Limit (dBuV/m) | Over limit (dB) | Antenna Pol. | Detector |
| 11490.000 | 28.46 | 23.36 | 51.82 | 68.20 | -16.38 | V | Peak |
| 17235.000 | 29.75 | 31.97 | 61.72 | 68.20 | -6.48 | V | Peak |
| 11490.000 | 28.83 | 23.36 | 52.19 | 68.20 | -16.01 | H | Peak |
| 17235.000 | 30.00 | 31.97 | 61.97 | 68.20 | -6.23 | H | Peak |
| 11490.000 | 17.70 | 23.36 | 41.06 | 54.00 | -12.94 | V | AVG |
| 17235.000 | 18.41 | 31.97 | 50.38 | 54.00 | -3.62 | V | AVG |
| 11490.000 | 17.86 | 23.36 | 41.22 | 54.00 | -12.78 | H | AVG |
| 17235.000 | 17.99 | 31.97 | 49.96 | 54.00 | -4.04 | H | AVG |
| **TM1 / Band: 5725-5850 MHz / BW: 20 / CH: M** | | | | | | | |
| Frequency (MHz) | Reading (dBuV) | Factor (dB/m) | Result (dBuV/m) | Limit (dBuV/m) | Over limit (dB) | Antenna Pol. | Detector |
| 11570.000 | 29.04 | 23.42 | 52.46 | 68.20 | -15.74 | V | Peak |
| 17355.000 | 29.63 | 32.18 | 61.81 | 68.20 | -6.39 | V | Peak |
| 11570.000 | 29.03 | 23.42 | 52.45 | 68.20 | -15.75 | H | Peak |
| 17355.000 | 30.09 | 32.18 | 62.27 | 68.20 | -5.93 | H | Peak |
| 11570.000 | 18.967 | 23.42 | 42.39 | 54.00 | -11.61 | V | AVG |
| 17355.000 | 18.727 | 32.18 | 50.91 | 54.00 | -3.09 | V | AVG |
| 11570.000 | 18.847 | 23.42 | 42.27 | 54.00 | -11.73 | H | AVG |
| 17355.000 | 18.366 | 32.18 | 50.55 | 54.00 | -3.45 | H | AVG |
| **TM1 / Band: 5725-5850 MHz / BW: 20 / CH: H** | | | | | | | |
| Frequency (MHz) | Reading (dBuV) | Factor (dB/m) | Result (dBuV/m) | Limit (dBuV/m) | Over limit (dB) | Antenna Pol. | Detector |
| 11650.000 | 28.55 | 23.49 | 52.04 | 68.20 | -16.16 | V | Peak |
| 17475.000 | 29.87 | 32.39 | 62.26 | 68.20 | -5.94 | V | Peak |
| 11650.000 | 28.77 | 23.49 | 52.26 | 68.20 | -15.94 | H | Peak |
| 17475.000 | 29.70 | 32.39 | 62.09 | 68.20 | -6.11 | H | Peak |
| 11650.000 | 18.04 | 23.49 | 41.53 | 54.00 | -12.47 | V | AVG |
| 17475.000 | 18.53 | 32.39 | 50.92 | 54.00 | -3.08 | V | AVG |
| 11650.000 | 18.03 | 23.49 | 41.52 | 54.00 | -12.48 | H | AVG |
| 17475.000 | 18.34 | 32.39 | 50.73 | 54.00 | -3.27 | H | AVG |

Remark:
1. Result =Reading + Factor
2. Only the worst case (802.11n(HT20)) is recorded in the report.
3. Test frequency are from 1GHz to 40GHz, the amplitude of spurious emissions which are attenuated more than 20 dB below the limits are not reported.

## APPENDIX I -- TEST SETUP PHOTOGRAPH

Please refer to separated files Appendix I -- Test Setup Photograph_RF

## APPENDIX II -- EXTERNAL PHOTOGRAPH

Please refer to separated files Appendix II -- External Photograph

## APPENDIX III -- INTERNAL PHOTOGRAPH

Please refer to separated files Appendix III -- Internal Photograph

---------- End of Report ----------