BK7236S-WIZ-MINI Datasheet

DS-BK7236S-WIZ-MINI-E01 V1.0

2024/8/28

Contents

Contents 2

1. Module Overview 3

2. Module Outline 4

2.1 Module Dimensions 4

2.2 Module Outline with Designators 5

2.3 Module Marking (QR Code) 5

2.4 Module PCB Antenna 5

2.5 Schematic 5

3. Pin Descriptions 7

4. Electrical Characteristics 10

4.1 Absolute Maximum Ratings 10

4.2 Recommended Operating Conditions 10

4.3 Digital I/O Characteristics 10

4.4 Current Consumption 11

4.5 CEN Timing 12

4.6 ESD Ratings 12

4.7 WLAN RF Receiver Characteristics 12

4.8 WLAN RF Transmitter Characteristics 14

4.9 Bluetooth LE RF Receiver Characteristics 15

4.10 Bluetooth LE RF Transmitter Characteristics 18

4.11 AUX ADC Characteristics 19

4.12 I2C Characteristics 20

4.13 PWM Characteristics 20

5. Certification 21

Revision History 22

1. Module Overview

The BK7236S-WIZ-MINI is a low-power, high-performance Wi-Fi + Bluetooth LE module. It consists of the BK7236S SoC and peripheral resistors and capacitors, crystal oscillators, buck inductors, and onboard PCB antenna. It features a 1x1 single-band 2.4G Wi-Fi 6 and Bluetooth 5.2 combo solution. The module also has a simple and easy-to-use interface targeted for lighting applications. A variety of products can be developed based on this module.

The BK7236S integrates a 32-bit Armv8-M STAR-MC1 MCU that can operate at up to 160 MHz. It also incorporates 4 MB flash and 640 KB RAM.

Figure 1-1 BK7236S-WIZ-MINI Block Diagram

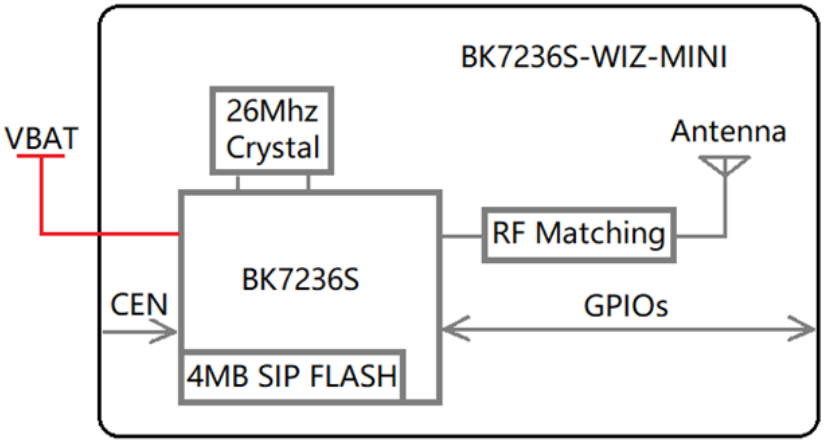

2. Module Outline

2.1 Module Dimensions

Figure 2-1 Module Dimensions (Bottom Layer, Top View)

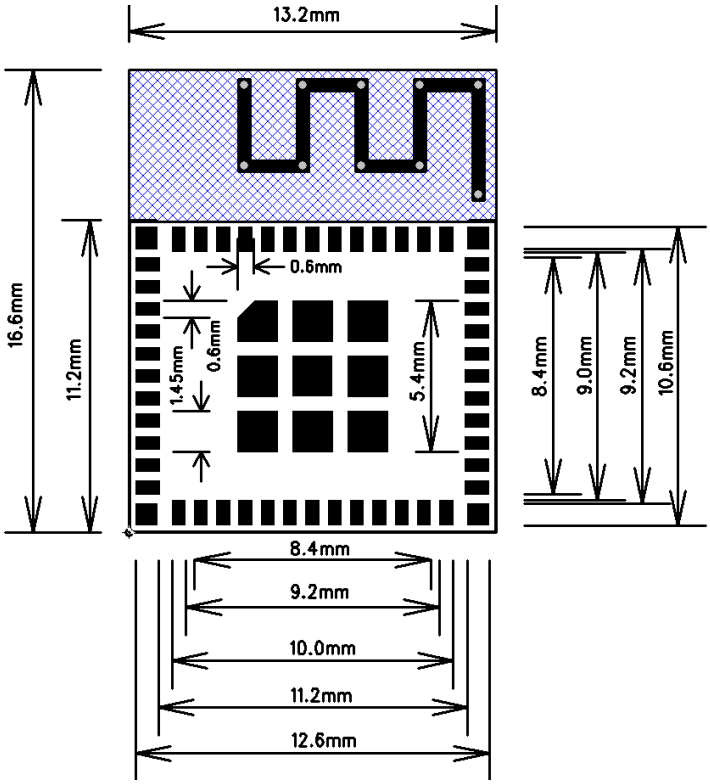

The module dimensions are as below:

- Length: 16.6 mm
- Width: 13.2 mm
- Board thickness: 0.8 mm
- Maximum overall thickness: 3.2 mm

2.2 Module Outline with Designators

Figure 2-2 Module Outline with Designators (Top View)

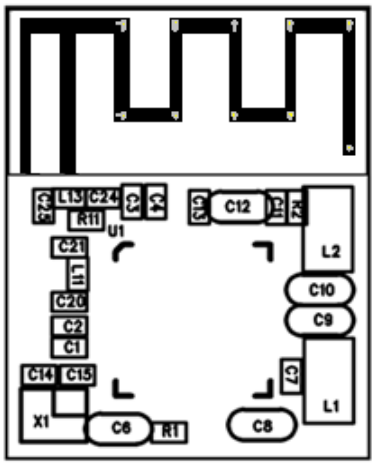

2.3 Module Marking (QR Code)

To be provided.

The color of the module solder mask is white.

2.4 Module PCB Antenna

Gain: TBD

Efficiency: TBD

2.5 Schematic

Figure 2-3 shows the schematic of the module.

Figure 2-3 BK7236S-WIZ-MINI Schematic

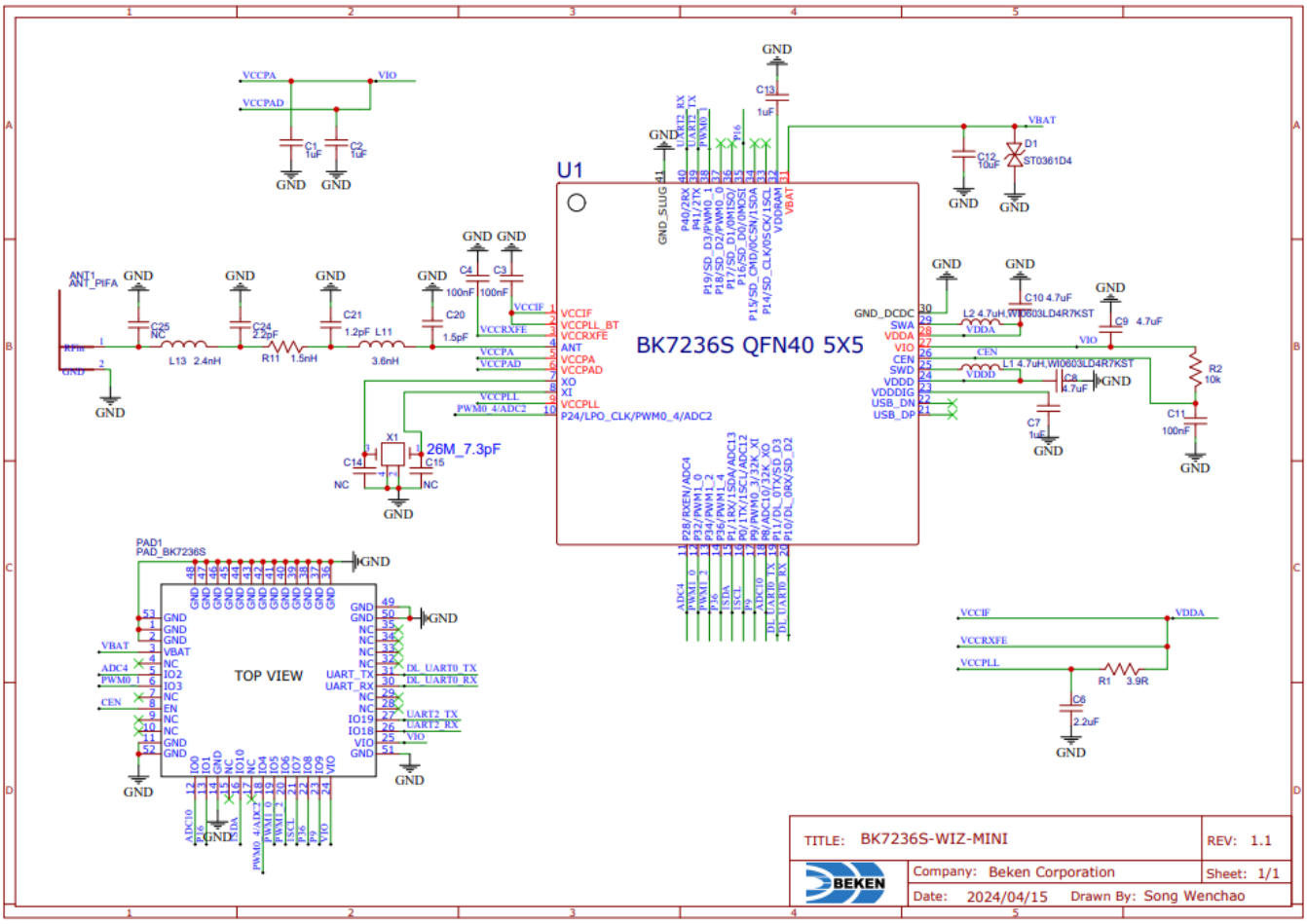

3. Pin Descriptions

Figure 3-1 shows the pin assignments of the module.

Figure 3-1 Pin Assignments (Bottom Layer, Top View)

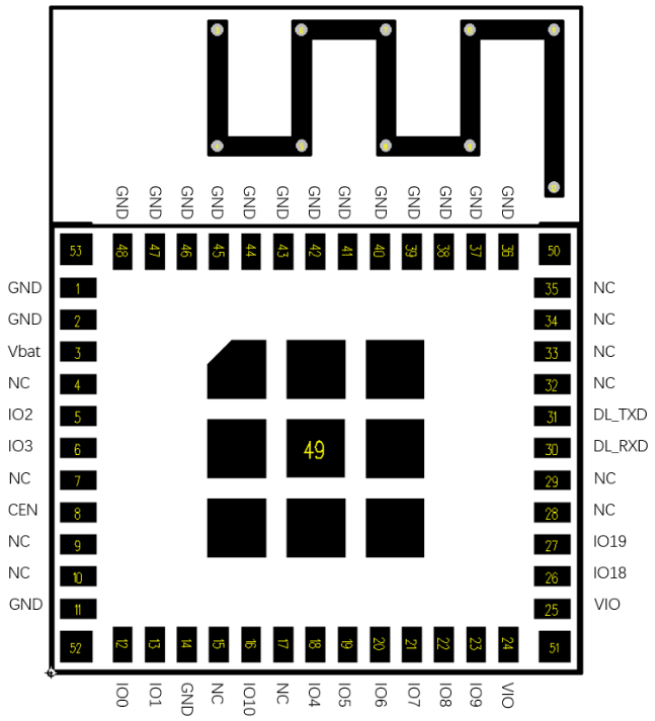

Table 3-1 shows the pin descriptions of the module.

Table 3-1 Pin Descriptions

Pin #	Name	Type	Default State After Power-on	Description
1	GND	P	-	Ground
2	GND	P	-	Ground
3	VBAT	P	-	Chip external power supply input
4	NC	-	-	No connect
5	IO2	IO	Hi-Z, no pull-up/down	GPIO28, ADC4
6	IO3	IO	Hi-Z, no pull-up/down	GPIO19, PWM0_1
7	NC	-	-	No connect
8	CEN	I	10 kΩ pulled up to VIO	Chip enable, active high

Pin #	Name	Type	Default State After Power-on	Description
9	NC	-	-	No connect
10	NC	-	-	No connect
11	GND	P	-	Ground
12	IO0	IO	Hi-Z, no pull-up/down	GPIO8, ADC10, 32K_XO
13	IO1	IO	Hi-Z, no pull-up/down	GPIO16
14	GND	P	-	Ground
15	NC	-	-	No connect
16	IO10	IO	Hi-Z, no pull-up/down	GPIO1, UART1_RX, I2C1_SDA, ADC13
17	NC	-	-	No connect
18	IO4	IO	Hi-Z, no pull-up/down	GPIO24, PWM0_4, ADC2
19	IO5	IO	Hi-Z, no pull-up/down	GPIO32, PWM1_0, ADC2
20	IO6	IO	Hi-Z, no pull-up/down	GPIO34, PWM1_2
21	IO7	IO	Hi-Z, no pull-up/down	GPIO0, UART1_TX, I2C1_SCL
22	IO8	IO	Hi-Z, no pull-up/down	GPIO36, PWM1_4
23	IO9	IO	Hi-Z, no pull-up/down	GPIO9, PWM0_3
24	VIO	P	-	IO LDO output
25	VIO	P	-	IO LDO output
26	IO18	IO	Hi-Z, no pull-up/down	GPIO40, UART2_RX
27	IO19	IO	Hi-Z, no pull-up/down	GPIO41, UART2_TX
28	NC	-	-	No connect
29	NC	-	-	No connect
30	DL_RXD	IO	High level, 50 kΩ pulled up to VIO	GPIO10, DL_UART_RX, UART0_RX
31	DL_TXD	IO	High level, 50 kΩ pulled up to VIO	GPIO11, DL_UART_TX, UART0_TX
32	NC	-	-	No connect
33	NC	-	-	No connect
34	NC	-	-	No connect

Pin #	Name	Type	Default State After Power-on	Description
35	NC	-	-	No connect
36–48	GND	P	-	Ground
49	PAD	P	-	Ground pad, connected to GND
50–53	GND	-	-	Ground

4. Electrical Characteristics

4.1 Absolute Maximum Ratings

Parameter	Description	Min.	Max.	Unit
VBAT	Power supply input	-0.3	4.5	V
I_{max}	VBAT maximum current	-	400	mA
V_{DIG_A}	Voltage on any digital pin	-0.3	VIO+0.3	V
T_{STR}	Storage temperature range	-55	150	℃
T_{OPR}	Operating temperature range (shielding cover temperature)	-40	105	℃

4.2 Recommended Operating Conditions

Parameter	Description	Min.	Typ.	Max.	Unit
VBAT	Power supply input	2.4	3.3	3.6	V
VIO	I/O voltage	2.4	3.0	3.6	V
Vpp	Ripple on the VBAT	-	-	200	mV

4.3 Digital I/O Characteristics

Symbol	Parameter	Conditions	Min.	Typ.	Max.	Unit
VIH	High-level input voltage	-	0.7 VIO	-	VIO + 0.3	V
VIL	Low-level input voltage	-	-0.3	-	0.3 VIO	V
VOH	High-level output voltage	-	0.9 VIO	-	-	V
VOL	Low-level output voltage	-	-	-	0.1 VIO	V
I_{DRV}	I/O output drive strength	VIH: 0.3 VIO; VIL: 0.7 VIO	4	-	18	mA
R_{PU}	Weak pull-up resistor	-	-	40	-	kΩ
R_{PD}	Weak pull-down resistor	-	-	44	-	kΩ

4.4 Current Consumption

Parameter	Condition	Min.	Typ.	Max.	Unit
Active Mode					
RX current	11b, continuous receive, buck	-	13	-	mA
	11b, continuous receive, LDO	-	26	-	mA
	11b/g/n/ax, 20 MHz, mixed mode, continuous receive, buck	-	25	-	mA
	11n/ax 40 MHz, mixed mode, continuous receive, buck	-	27	-	mA
	11b/g/n/ax, 20 MHz, mixed mode, continuous receive, LDO	-	42	-	mA
	11n/ax, 40 MHz, mixed mode, continuous receive, LDO	-	44	-	mA
TX current	11b: 1 Mbps DSSS @ 19 dBm	-	235	-	mA
	11b: 1 Mbps DSSS @ 20 dBm	-	255	-	mA
	11g: 54 Mbps OFDM @ 17 dBm	-	200	-	mA
	11n: MCS7, HT20 @ 16 dBm	-	189	-	mA
	11n: MCS7, HT40 @ 15 dBm	-	182	-	mA
	11ax: MCS7, HE20 @ 16 dBm	-	188	-	mA
	11ax: MCS7, HE40 @ 15 dBm	-	182	-	mA
Sleep Mode					
Normal sleep	CPU active(60Mhz), Wi-Fi MAC on, Wi-Fi PHY off, Bluetooth off, multimedia (audio, video) off, encryption off	-	3.8	-	mA
Low-voltage sleep	CPU halted, Wi-Fi MAC halted, Wi-Fi PHY off, Bluetooth off, encryption off, SMEM3 off, XTALH off, VDDDIG=0.6 V	40	55	80	µA
Deep sleep	Only the AON domain is active.	-	13.7	-	µA
Shutdown Mode					
Shutdown	CEN low	-	3.1	-	µA

4.5 CEN Timing

Parameter	Description	Min.	Max.	Unit
T_{CEN_Min}	minimum pull-low time for CEN reset	1	-	ms
V_{CEN_IL}	CEN input low level	-	1	V

Figure 4-1 CEN Signal Waveform Requirements

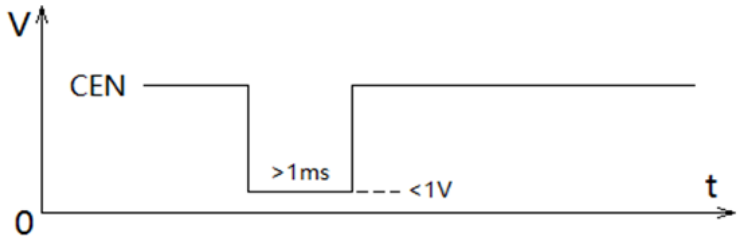

4.6 ESD Ratings

Parameter	Description	Test Condition	Value	Unit
ESD HBM	Electrostatic discharge voltage (human body model), per ANSI/ESDA/JEDEC JS-001	ANT pin	±2000	V
		Other pins	±3000	V
ESD CDM	Electrostatic discharge voltage (charge device model), per ANSI/ESDA/JEDEC JS-002	All pins	±500	V

4.7 WLAN RF Receiver Characteristics

Measured with T = 25 °C, VBAT = 3.3 V unless otherwise stated.

Parameter	Condition	Min.	Typ.	Max.	Unit
General					
Frequency range	-	2412	-	2484	MHz
Sensitivity					
Sensitivity - IEEE 802.11b (8% PER for PSDU)	1 Mbps DSSS	-	-98	-	dBm
	11 Mbps DSSS	-	-89	-	dBm
Sensitivity - IEEE 802.11g	6 Mbps OFDM	-	-92	-	dBm

Parameter	Condition		Min.	Typ.	Max.	Unit
(10% PER for PSDU)	54 Mbps OFDM		-	-76.5	-	dBm
Sensitivity - IEEE 802.11n, 20 MHz (10% PER for PSDU, BCC)	HT20, MCS0		-	-92	-	dBm
	HT20, MCS7		-	-73	-	dBm
Sensitivity - IEEE 802.11n, 40 MHz (10% PER for PSDU, BCC)	HT40, MCS0		-	-87.5	-	dBm
	HT40, MCS7		-	-71.5	-	dBm
Sensitivity - IEEE 802.11ax, 20 MHz (10% PER for PSDU, LDPC)	HE20, MCS0		-	-92	-	dBm
	HE20, MCS7		-	-74	-	dBm
Sensitivity - IEEE 802.11ax, 40 MHz (10% PER for PSDU, LDPC)	HE40, MCS0		-	-88.5	-	dBm
	HE40, MCS7		-	-72	-	dBm
Maximum Receive Level						
Maximum receive level @ 2.4 GHz	11b: 1, 2 Mbps (8% PER, 1024 octets)		-	10	-	dBm
	11b: 5.5, 11 Mbps (8% PER, 1024 octets)		-	10	-	dBm
	11g: 6–54 Mbps (10% PER, 1000 octets)		-	0	-	dBm
	11n: MCS0–7 (10% PER, 4096 octets)		-	0	-	dBm
	11ax: MCS0–7 (10% PER, 4096 octets)		-	0	-	dBm
Adjacent Channel Rejection						
Adjacent channel (±30 MHz) rejection - IEEE 802.11b (8% PER for 1024 octet PSDU with desired signal level as specified in Condition)	1 Mbps DSSS	-74 dBm	-	50	-	dB
	2 Mbps DSSS	-74 dBm	-	45	-	dB
Adjacent channel (±25 MHz) rejection - IEEE 802.11b (8% PER for 1024 octet PSDU with desired signal level as specified in Condition)	5.5 Mbps DSSS	-70 dBm	-	43	-	dB
	11 Mbps DSSS	-70 dBm	-	40	-	dB
Adjacent channel (±25 MHz) rejection - IEEE 802.11g	6 Mbps OFDM	-79 dBm	-	43	-	dB

Parameter	Condition		Min.	Typ.	Max.	Unit
(10% PER for 1000 octet PSDU with desired signal level as specified in Condition)	54 Mbps OFDM	-62 dBm	-	27	-	dB
Adjacent channel (±25 MHz) rejection - IEEE 802.11n (10% PER for 4096 octet PSDU with desired signal level as specified in Condition)	HT20, MCS0	-79 dBm	-	43	-	dB
	HT20, MCS7	-61 dBm	-	21	-	dB
Spurious Emissions						
Spurious emissions	< 1 GHz		-	-60	-	dBm
	> 1 GHz		-	-50	-	dBm

4.8 WLAN RF Transmitter Characteristics

Measured with T = 25 °C, VBAT = 3.3 V unless otherwise stated.

Parameter	Condition	Min.	Typ.	Max.	Unit
General					
Frequency range	-	2412	-	2484	MHz
TX Power					
TX power - IEEE 802.11b (SEM compliant)	1 Mbps DSSS	-	20	-	dBm
	11 Mbps DSSS	-	20	-	dBm
TX power - IEEE 802.11g (EVM compliant)	6 Mbps OFDM	-	18	-	dBm
	54 Mbps OFDM	-	18	-	dBm
TX power - IEEE 802.11n (EVM compliant)	HT20, MCS0	-	17	-	dBm
	HT20, MCS7	-	17	-	dBm
	HT40, MCS0	-	16	-	dBm
	HT40, MCS7	-	16	-	dBm
TX power - IEEE 802.11ax (EVM compliant)	HE20, MCS0	-	17	-	dBm
	HE20, MCS7	-	17	-	dBm
	HE40, MCS0	-	16	-	dBm
	HE40, MCS7	-	16	-	dBm

Parameter	Condition	Min.	Typ.	Max.	Unit
TX EVM					
TX EVM - IEEE 802.11b (SEM compliant)	1 Mbps DSSS, @20dBm	-	-15	-	dB
	11 Mbps DSSS, @20dBm	-	-15	-	dB
TX EVM - IEEE 802.11g	6 Mbps OFDM, @18dBm	-	-27	-	dB
	54 Mbps OFDM, @18dBm	-	-27	-	dB
TX EVM - IEEE 802.11n	HT20, MCS0, @17dBm	-	-29	-	dB
	HT20, MCS7, @17dBm	-	-29	-	dB
	HT40, MCS0, @16dBm	-	-29	-	dB
	HT40, MCS7, @16dBm	-	-29	-	dB
TX EVM - IEEE 802.11ax	HE20, MCS0, @17dBm	-	-30	-	dB
	HE20, MCS7, @17dBm	-	-30	-	dB
	HE40, MCS0, @16dBm	-	-30	-	dB
	HE40, MCS7, @16dBm	-	-30	-	dB
Spurious Emissions					
Spurious emissions (at maximum output power)	< 1 GHz	-	-50	-	dBm
	> 1 GHz	-	-45	-	dBm

4.9 Bluetooth LE RF Receiver Characteristics

Measured with T = 25 °C, VBAT = 3.3 V unless otherwise stated.

Parameter	Condition	Min.	Typ.	Max.	Unit
General					
Frequency range	-	2402	-	2480	MHz
Bluetooth LE 1 Mbps					
Sensitivity	30.8% PER	-	-97	-	dBm
Maximum input level	30.8% PER	-	0	-	dBm
C/I co-channel	-	-	8	-	dB
C/I 1 MHz adjacent channel	-	-	0	-	dB

Parameter	Condition	Min.	Typ.	Max.	Unit
C/I -1 MHz adjacent channel	-	-	0	-	dB
C/I 2 MHz adjacent channel	-	-	-26	-	dB
C/I -2 MHz adjacent channel	-	-	-27	-	dB
C/I 3 MHz adjacent channel	-	-	-28	-	dB
C/I -3 MHz adjacent channel	-	-	-29	-	dB
C/I > 3 MHz adjacent channel	-	-	-50	-	dB
C/I < -3 MHz adjacent channel	-	-	-50	-	dB
Out-of-band blocking	30–2000 MHz	-10	-	-	dBm
	2003–2399 MHz	-12	-	-	dBm
	2484–2997 MHz	-12	-	-	dBm
	3000 MHz–12.75 GHz	-2	-	-	dBm
Bluetooth LE 2 Mbps					
Sensitivity	30.8% PER	-	-94	-	dBm
Maximum input level	30.8% PER	-	0	-	dBm
C/I co-channel	-	-	7	-	dB
C/I 2 MHz adjacent channel	-	-	0	-	dB
C/I -2 MHz adjacent channel	-	-	3	-	dB
C/I 4 MHz adjacent channel	-	-	-26	-	dB
C/I -4 MHz adjacent channel	-	-	-30	-	dB
C/I 6 MHz adjacent channel	-	-	-30	-	dB
C/I -6 MHz adjacent channel	-	-	-39	-	dB
C/I > 6 MHz adjacent channel	-	-	-22	-	dB
C/I < -6 MHz adjacent channel	-	-	-22	-	dB
Out-of-band blocking	30–2000 MHz	-	-30	-	dBm
	2003–2399 MHz	-	-35	-	dBm
	2484–2997 MHz	-	-35	-	dBm
	3000 MHz–12.75 GHz	-	-17	-	dBm

Parameter	Condition	Min.	Typ.	Max.	Unit
Bluetooth LE 125 kbps					
Sensitivity	30.8% PER	-	-102	-	dBm
Maximum input level	30.8% PER	-	0	-	dBm
C/I co-channel	-	-	3	-	dB
C/I 1 MHz adjacent channel	-	-	-15	-	dB
C/I -1 MHz adjacent channel	-	-	-16	-	dB
C/I 2 MHz adjacent channel	-	-	-34	-	dB
C/I -2 MHz adjacent channel	-	-	-40	-	dB
C/I 3 MHz adjacent channel	-	-	-42	-	dB
C/I -3 MHz adjacent channel	-	-	-43	-	dB
C/I > 3 MHz adjacent channel	-	-	-41	-	dB
C/I < -3 MHz adjacent channel	-	-	-42	-	dB
Bluetooth LE 500 kbps					
Sensitivity	30.8% PER	-	-99	-	dBm
Maximum input level	30.8% PER	-	0	-	dBm
C/I co-channel	-	-	5	-	dB
C/I 1 MHz adjacent channel	-	-	-2	-	dB
C/I -1 MHz adjacent channel	-	-	-3	-	dB
C/I 2 MHz adjacent channel	-	-	-30	-	dB
C/I -2 MHz adjacent channel	-	-	-31	-	dB
C/I 3 MHz adjacent channel	-	-	-31	-	dB
C/I -3 MHz adjacent channel	-	-	-40	-	dB
C/I > 3 MHz adjacent channel	-	-	-36	-	dB
C/I < -3 MHz adjacent channel	-	-	-36	-	dB

4.10 Bluetooth LE RF Transmitter Characteristics

Measured with T = 25 °C, VBAT = 3.3 V unless otherwise stated.

Parameter		Condition	Min.	Typ.	Max.	Unit
General						
Frequency range		-	2402	-	2480	MHz
TX power		-	-20	6	15	dBm
Bluetooth LE 1 Mbps						
In-band emissions	±2 MHz offset	-	-	-47	-	dBm
	±3 MHz offset	-	-	-49	-	dBm
	>±3 MHz offset	-	-	-50	-	dBm
Modulation characteristics	Δf1avg	-	-	245	-	kHz
	Δf2max	-	-	235	-	kHz
	Δf2avg/Δf1avg	-	-	0.93	-	-
Carrier frequency offset and drift	Max $\lvert f_n \rvert$ $n = 0, 1, 2, 3 \ldots k$	-	-	3	-	kHz
	Max $\lvert f_0 - f_n \rvert$ $n = 2, 3, 4 \ldots k$	-	-	2.5	-	kHz
	$\lvert f_1 - f_0 \rvert$	-	-	2	-	kHz
	Max $\lvert f_n - f_{n-5} \rvert$ $n = 6, 7, 8 \ldots k$	-	-	2.5	-	kHz/50 µs
Bluetooth LE 2 Mbps						
In-band emissions	±4 MHz offset	-	-	-50	-	dBm
	±5 MHz offset	-	-	-51	-	dBm
	>±5 MHz offset	-	-	-52	-	dBm
Modulation characteristics	Δf1avg	-	-	488	-	kHz
	Δf2max	-	-	469	-	kHz
	Δf2avg/Δf1avg	-	-	0.93	-	-
Carrier frequency offset and drift	Max $\lvert f_n \rvert$ $n = 0, 1, 2, 3 \ldots k$	-	-	3	-	kHz
	Max $\lvert f_0 - f_n \rvert$ $n = 2, 3, 4 \ldots k$	-	-	2.5	-	kHz
	$\lvert f_1 - f_0 \rvert$	-	-	1.5	-	kHz

Parameter		Condition	Min.	Typ.	Max.	Unit
	Max $\lvert f_n - f_{n-5} \rvert$ n = 6, 7, 8…k	-	-	2.5	-	kHz/50 µs
Bluetooth LE 125 kbps						
In-band emissions	±2 MHz offset	-	-	-47	-	dBm
	±3 MHz offset	-	-	-49	-	dBm
	>±3 MHz offset	-	-	-50	-	dBm
Modulation characteristics	Δf1avg	-	-	245	-	kHz
	Δf1max	-	-	246	-	kHz
Carrier frequency offset and drift	Max $\lvert f_n \rvert$ n = 0, 1, 2, 3…k	-	-	1.5	-	kHz
	Max $\lvert f_0 - f_n \rvert$ n = 1, 2, 3…k	-	-	1.5	-	kHz
	$\lvert f_0 - f_3 \rvert$	-	-	1.5	-	kHz
	$\lvert f_n - f_{n-3} \rvert$ n = 7, 8, 9…k	-	-	1.5	-	kHz/48 µs
Bluetooth LE 500 kbps						
In-band emissions	±2 MHz offset	-	-	-47	-	dBm
	±3 MHz offset	-	-	-49	-	dBm
	>±3 MHz offset	-	-	-50	-	dBm

4.11 AUX ADC Characteristics

Parameter	Condition	Min.	Typ.	Max.	Unit
Conversion clock	-	-	-	13	MHz
Conversion time	-	-	16	-	Cycle
V_{REF}	Internal	-	1.2	-	V
Input voltage range	-	0	-	VBAT	V
Input impedance	-	10	-	-	MΩ
Input capacitance (Cs)	-	-	1	-	pF
DNL	-	-1	-	3	LSB
INL	-	-5	-	5	LSB

Parameter	Condition	Min.	Typ.	Max.	Unit
Precision	Internal (> 500 mV)	-	-	1	%
	Internal (400–500 mV)	-	2	4	%
	Internal (300–400 mV)	-	3	6	%
	Internal (200–300 mV)	-	-	8	%
	Internal (100–200 mV)	-	-	20	%
	Internal (50–100 mV)	-	-	40	%
	Internal (<50 mV)	-	-	100	%

4.12 I2C Characteristics

Parameter	Condition	Min.	Typ.	Max.	Unit
Clock	-	-	400	400	kHz
Pull-up resistor	-	1.5	4.7	10	kΩ
Capacitive load drive strength (enhanced drive mode)	Ceramic capacitor added to ground	20	-	-	nF

4.13 PWM Characteristics

Parameter	Condition	Min.	Typ.	Max.	Unit
Frequency	-	-	-	8	MHz
Recommended pull-down resistor	-	-	51K	-	KΩ

5. Certification

The module has passed the following certifications:

- FCC
- SRRC
- WFA
- BQB

Notes:

- Due to the optimization of chip and module design, module parameters may change. Please pay attention to the update of the module datasheet.
- During certification, the transmit power is appropriately adjusted due to the specific application and certification requirements.
- Test conditions for RF transceiver performance: supply voltage = 3.3 V, ambient temperature = 25 °C.

Revision History

Version	Date	Description
1.0	2024/8/28	Initial release

Copyright

© 2024 Beken Corporation. The term “Beken” refers to Beken Corporation and/or its affiliates. This document contains information that is proprietary to Beken. Any unauthorized use, reproduction, or disclosure of this document in whole or in part is prohibited.

Disclaimer

The documentation is provided on an "as-is" basis only. Beken reserves the right to make any updates, corrections and any other modifications to its documentation without further notice and limitation to product information, descriptions, and specifications herein. Beken does not give warranties as to the accuracy or completeness of the included information. Beken shall have no liability for any use of the information in this documentation. You should obtain the latest relevant information before placing orders and should verify that such information is current and complete. Information published by Beken regarding any third-party products does not constitute a license to use such products or a warranty or endorsement thereof. Use of such information may require a license from a third party under the intellectual property rights of such third party, or a license from Beken under the intellectual property rights of Beken.

Trademarks

Beken, the BEKEN logo, and combinations thereof are trademarks or registered trademarks of Beken. All other product or brand names mentioned herein are trademarks or registered trademarks of their respective holders.

Beken Corporation

Building 41, 1387 Zhangdong Rd

Shanghai 201203

China

http://www.bekencorp.com

FCC Warning

15.19 Labeling requirements.
This device complies with part 15 of the FCC Rules. Operation is subject to the following two conditions: (1) This device may not cause harmful interference, and (2) this device must accept any interference received, including interference that may cause undesired operation.
15.21 Information to user.
Any Changes or modifications not expressly approved by the party responsible for compliance could void the user's authority to operate the equipment.
15.105 Information to the user.
Note: This equipment has been tested and found to comply with the limits for a Class B digital device, pursuant to part 15 of the FCC Rules. These limits are designed to provide reasonable protection against harmful interference in a residential installation. This equipment generates uses and can radiate radio frequency energy and, if not installed and used in accordance with the instructions, may cause harmful interference to radio communications. However, there is no guarantee that interference will not occur in a particular installation. If this equipment does cause harmful interference to radio or television reception, which can be determined by turning the equipment off and on, the user is encouraged to try to correct the interference by one or more of the following measures:

-Reorient or relocate the receiving antenna.
-Increase the separation between the equipment and receiver.
-Connect the equipment into an outlet on a circuit different from that to which the receiver is connected.

-Consult the dealer or an experienced radio/TV technician for help.

FCC RF Radiation Exposure Statement:
1.This Transmitter must not be co-located or operating in conjunction with any other antenna or transmitter.
2.This equipment complies with RF radiation exposure limits set forth for an uncontrolled environment.
This equipment should be installed and operated with minimum distance 20cm between the radiator and your body.

Additional Section: Integration instructions for host product manufacturers
according to KDB 996369 D03 OEM Manual v01
2.1 Conditions on using Shenzhen Shi Xinzhongxin Technology Co., Ltd regulatory approvals:

A.Customer must ensure that its product (The ”CUSTOMER Product”) is electrically
identical to Shenzhen Shi Xinzhongxin Technology Co., Ltd reference designs. Customer acknowledges that any modifications to Shenzhen Shi Xinzhongxin Technology Co., Ltd reference designs may invalidate regulatory approvals in relation to the CUSTOMER Product, or may necessitate notifications to the relevant regulatory authorities.
B.Customer is responsible for ensuring that antennas used with the product are of the same type, with same or lower gains as approved and providing antenna reports to Shenzhen Shi Xinzhongxin Technology Co., Ltd
C.Customer is responsible for regression testing to accommodate changes to Shenzhen Shi Xinzhongxin Technology Co., Ltd reference designs, new antennas, and portable RF exposure safety testing/apprvals.
D.Appropriate labels must be affixed to the CUSTOMER Product that comply with applicable regulations in all respects.
E.A user’s manual or instruction manual must be included with the customer product that contains the text as required by applicable law. Without limitation of the foregoing, an example (for illustration purposes only) of possible text to include is set forth below:

2.2 List of applicable FCC rules (customers' product must also compliant with these rules)
FCC Part 15 Subpart C 15.247

2.3 Specific operational use conditions

Operation Frequency:	2402MHz to 2480MHz
Number of Channels:	40
Modulation Type:	GFSK
Antenna Type:	PCB Antenna
Antenna Gain#:	-0.71dBi

The module can be used for mobile applications with the same ant. type with maximum -0.71dBi antenna. The host manufacturer installing this module into their product must ensure that the final composite product complies with the FCC requirements by a technical assessment or evaluation to the FCC rules, including the transmitter operation. The host manufacturer has to be aware not to provide information to the end user regarding how to install or remove this RF module in the user's manual of the end product which integrates this module. The end user manual shall include all required regulatory information/warning as show in this manual. If the end product manufacturer use it to a portable product, please provide the SAR compliance.

2.4 Limited module procedures
Not applicable. The module is a Single module and complies with the requirement of FCC Part 15.212.

2.5 Trace antenna designs

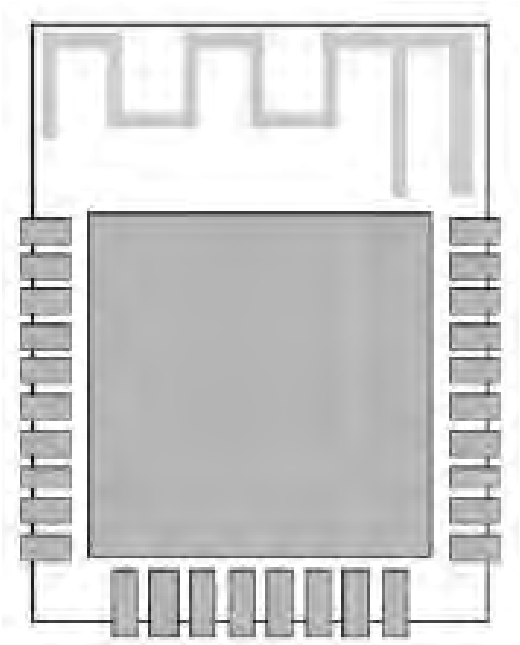

2.6 RF exposure considerations
The device can be used in mobile exposure condition without restriction and if RF
exposure statement or module layout is changed, then the host product manufacturer required to take responsibility of the module through a change in FCC ID or new application. The FCC ID of the module cannot be used on the final product. In these circumstances, the host manufacturer will be responsible for re-evaluating the end product (including the transmitter) and obtaining a separate FCC authorization.

2.7 Antennas
Antenna Type: PCB antenna
Antenna Gain: -0.71 dBi
This device is intended only for host manufacturers under the following conditions:
The transmitter module may not be co-located with any other transmitter or antenna;
The module shall be only used with the PCB antenna that has been originally tested and certified with this module. The antenna must be either permanently attached or employ a 'unique'antenna coupler. As long as the conditions above are met, further transmitter test will not be required. However, the host manufacturer is still responsible for testing their end product for any additional compliance requirements required with this module installed.

2.8 Label and compliance information
Host product manufacturers need to provide a physical or e-label stating "**Contains FCC ID:2BKIMBK7236SWIZMINI** " With their finished product.

2.9 Information on test modes and additional testing requirements

Operation Frequency:	2402MHz to 2480MHz
Number of Channels:	40
Modulation Type:	GFSK
Antenna Type:	PCB Antenna
Antenna Gain#:	-0.71dBi

Host manufacturer must perform test of radiated & conducted emission and spurious emission, etc according to the actual test modes for a stand-alone modular transmitter in a host, as well as for multiple simultaneously transmitting modules or other transmitters in a host product. If no other module used and no change to this module, the product can only to compliance with FCC part 15 B to meet the sale requirement. Only when all the test results of test modes comply with FCC requirements, then the end product can be sold legally.

2.10 Additional testing, Part 15 Subpart B disclaimer
The modular transmitter is only FCC authorized for FCC Part 15 Subpart C 15.247 that the host product manufacturer is responsible for compliance to any other FCC rules that apply to the host not covered by the modular transmitter grant of certification. If the grantee markets their product as being Part 15 Subpart B compliant (when it also contains unintentional-radiator digital circuity), then the grantee shall provide a notice stating that the final host product still requires Part 15 Subpart B compliance testing with the modular transmitter installed.