Optergy Air

Wireless Temperature, Humidity and CO Sensor (BW-THCO-M)

The BW-THCO-M is a wireless temperature, humidity and CO sensor for use in indoor environments for monitoring control. The sensor works with the suite of Optergy Air sensors when connected to an Optergy Air Transceiver (BG-1100-M). Up to seven (7) sensors can be connected to one Optergy Air Transceiver (BG-1100-M).

Temperature | Humidity | CO | Wireless | Multi-sensor Connectivity

OVERVIEW

Multi-sensor Connectivity	Up to seven BW-THCO-M wireless sensors can be connected to one BG-1100-M transceiver.
Quick & Easy Installation	As a wireless sensor, there are no power or signal cables to run.
Long-lasting Battery Powered	The sensor uses standard and easily replaceable AA batteries with reliable usage for up to 5 years. The battery life is viewable within the Optergy ecosystem.
No hidden fees	No special software license needed to operate.

HARDWARE SPECIFICATIONS

Sensing Technology	Semiconductor based sensor - digital humidity and CO sensor with built-in temperature sensor
Temperature Accuracy	± 0.2°C / ± 0.36°F (typical)
Temperature Resolution	14 bits
Relative Humidity Accuracy	± 2% (typical)
Relative Humidity Resolution	11 bits
CO Accuracy	± 2%
CO Range	0 to 1,000 ppm
CO Resolution	< 0.1 ppm
Battery Life	> 5 years (low battery indicator)
Data Interval	5 minutes (CO) if using 1.5v batteries, or 1 minute if using 3.6v batteries. 5 seconds (Temperature & Humidity)
Battery Type	4 x 1.5V alkaline (AA) or 4 x 3.6V lithium battery
Radio Frequency	2.4 GHz
Working Voltage	3.3V
Working Current	Average < 1mA (BLE)
Standby Current	< 3uA
Scope of Application	Indoor use
Detection Range	Ambient temperature -40°C to 60°C / -40°F to 140°F and humidity 0 to 95% (without condensation)
Working Temperature	-20°C to 60°C / -4°F to 140°F
Transmission Distance	10 to 30 meters / 32 to 100 feet indoor 30 to 50 meters / 100 to 164 feet outdoor
Dimensions	W 78mm (3 in.) x L 128 mm (5 in.) x H 29 mm (1.1 in.)
Weight	73 grams (16 pounds)
Model Number	BW-THCO-M (Temperature, Humidity and CO, Multi)

DIMENSIONS

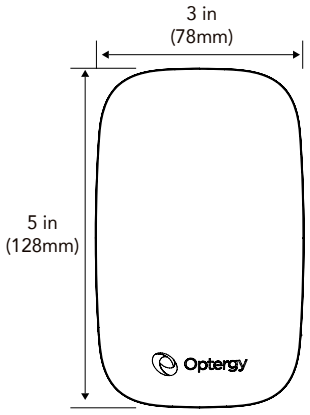

TOP

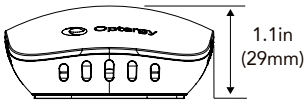

FRONT

FCC & CE: This device complies with Part 15 of the FCC rules. Operation is subject to the following two conditions:

(1) This device may not cause harmful interference, and (2) This device must accept any interference received, including interference that may cause undesired operation.

Optergy
Air

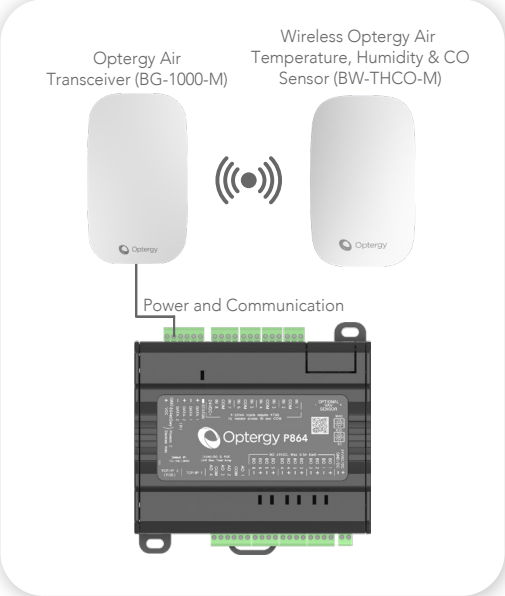

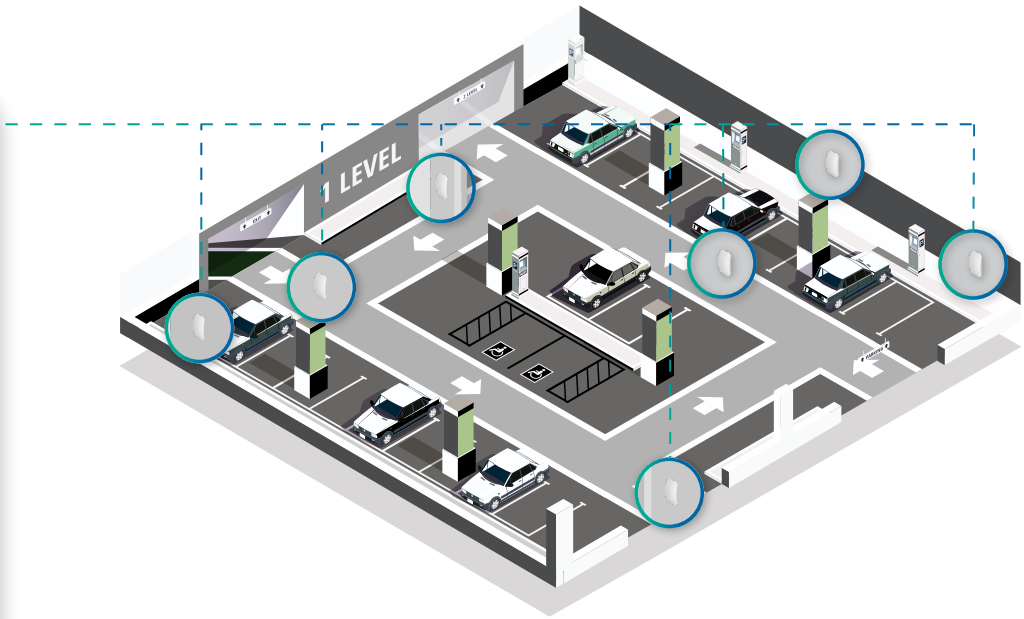

The Optergy Air BW-THCO-M sensor pairs with the Optergy Air Transceiver (BG-1000-M). Up to seven (7) Optergy Air BW-THCO-M sensors can be connected to one Optergy Air Transceiver (BG-1000-M).

Alternatively, the Optergy Air BW-THCO-M sensor can be connected to the Optergy Air Transceiver (BG-1000-M) in an ecosystem with a mixture of other Optergy Air sensors for a total of seven (7) Optergy Air sensors per one (1) Optergy Air Transceiver (BG-1000-M).

When used in conjunction with the P864 and the BG-1000-M, this device will transmit space temperature, humidity, and carbon monoxide values to the BACnet system. The data points for these values are associated with the connected device. The following BACnet points are included:

BACNET POINTS

The sensor points (temperature, humidity & CO level) are instantiated by the Optergy P864. These points are reserved for wireless sensors and will have BACnet values corresponding to the device instance of the Optergy P864. The reserved points include:

- Temperature Value (Deg F or Deg C)
- Humidity Value (%rH)
- Carbon Monoxide Value (ppm)
- Battery Level
- Low Battery Level Warning
- Sensor Online
- Sensor Paired

ACCESSORIES (BY OTHERS)

AA Batteries (1.5V or 3.6V)

The BW-THCO-M device requires four AA batteries (not included). We recommend using high-quality, leak-proof alkaline batteries for optimal performance.

Although the product will function with regular, good-quality alkaline batteries, the best performance can be achieved by using good-quality lithium batteries with a voltage of either 1.5V or 3.6V.

*Rechargeable batteries are not reccomended.

BW-THCO-M-DSRev1.0 © 2021-2023 Optergy All specifications are subject to change without notice.

Optergy

This device complies with part 15 of the FCC Rules. Operation is subject to the following two conditions: (1) This device may not cause harmful interference, and (2) this device must accept any interference received, including interference that may cause undesired operation.

Any Changes or modifications not expressly approved by the party responsible for compliance could void the user's authority to operate the equipment.

Note: This equipment has been tested and found to comply with the limits for a Class B digital device, pursuant to part 15 of the FCC Rules. These limits are designed to provide reasonable protection against harmful interference in a residential installation. This equipment generates uses and can radiate radio frequency energy and, if not installed and used in accordance with the instructions, may cause harmful interference to radio communications. However, there is no guarantee that interference will not occur in a particular installation. If this equipment does cause harmful interference to radio or television reception, which can be determined by turning the equipment off and on, the user is encouraged to try to correct the interference by one or more of the following measures:

-Reorient or relocate the receiving antenna.

-Increase the separation between the equipment and receiver.

-Connect the equipment into an outlet on a circuit different from that to which the receiver is connected.

-Consult the dealer or an experienced radio/TV technician for help.

FCC Radiation Exposure statement

The device has been evaluatec to meel general RF exposure requirement. The device can be used in portable exposure condition without restriction.