Wireless Device Over the Air Performance Data Summary

REPORT NO.	:	OQ1D0806
EQUIPMENT	:	ESP-ANT S-H
BRAND NAME	:	ESPRESSIF
MODEL NAME	:	ESP32-S3-MINI-1
DEVICE RECEIVING DATE	:	Nov. 16, 2021
TEST DATE(S)	:	Nov. 16, 2021 ~ Nov. 16, 2021

Reviewed by:	Approved by:
Feynman Liu	kevin chu
Feynman Liu / Vice Manager	Kevin Chu / Manager

Sporton International (Kunshan) Inc.

No. 1098, Pengxi North Road, Kunshan Economic Development Zone Jiangsu Province 215300 People's Republic of China

仅供北京动思创新科技有限公司

Table of Contents

Revision History ---------- **3**

1. Administration Data ---------- **4**

1.1 Testing Laboratory ---------- 4

1.2 Applicant ---------- 4

2. Product Photo ---------- **4**

3. Summary of Test Results ---------- **5**

4. FS Pattern ---------- **6**

5. Description for EUT Testing Position ---------- **9**

仅供 北京动思创新科技有限公司

Revision History

REPORT NO.	VERSION	DESCRIPTION	ISSUED DATE
OQ1D0806	1.0	Initial issue of report	Dec. 14, 2021

仅供 北京动思创新科技有限公司

1. Administration Data

1.1 Testing Laboratory

Test Site	Sporton International (Kunshan) Inc.
Test Site Location	No. 1098, Pengxi North Road, Kunshan Economic Development Zone Jiangsu Province 215300 People's Republic of China TEL: +86-0512-5790-0158 FAX: +86-0512-5790-0958
Chamber	□ OTA01-KS □ OTA02- KS □ OTA03-KS □ OTA04-KS ■ OTA05-KS

■: Indicates the chamber(s) used in this test report.

1.2 Applicant

Company Name	ESPRESSIF SYSTEMS (SHANGHAI) CO., LTD
Address	Suite 204, Block 2, 690 Bibo Road, Zhang Jiang Hi-Tech Park, Shanghai, China

2. Product Photo

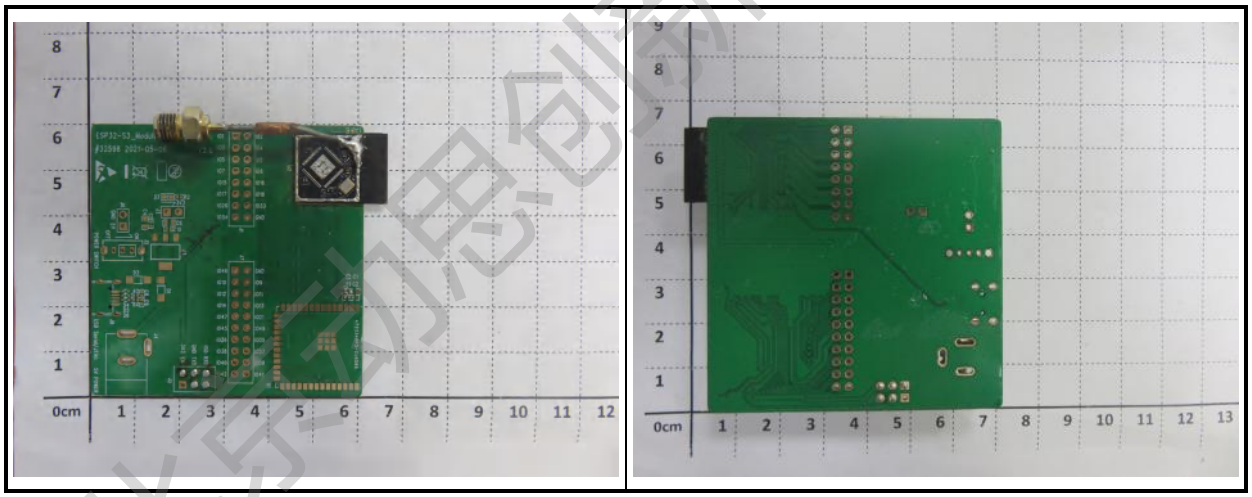

仅供北京动感创新科技有限公司

3. Summary of Test Results

Test / Position	Frequency (MHz)	Avg Gain (dBi)	Peak Gain (dBi)	Directivity (dBi)	Efficiency (dB)	Efficiency (%)
Free Space	2397	-1.79	3.72	5.51	-1.79	66.15
	2402	-1.74	3.69	5.43	-1.74	66.94
	2407	-1.53	3.86	5.39	-1.53	70.28
	2412	-1.32	3.99	5.31	-1.32	73.85
	2417	-1.25	3.99	5.24	-1.25	75.07
	2422	-1.17	4.00	5.17	-1.17	76.35
	2427	-1.15	3.94	5.09	-1.15	76.67
	2432	-1.18	3.87	5.05	-1.18	76.21
	2437	-1.22	3.79	5.01	-1.22	75.58
	2442	-1.15	3.92	5.06	-1.15	76.82
	2447	-1.07	3.99	5.06	-1.07	78.12
	2452	-0.99	4.17	5.16	-0.99	79.65
	2457	-0.88	4.31	5.19	-0.88	81.71
	2462	-0.82	4.43	5.25	-0.82	82.72
	2467	-0.82	4.49	5.31	-0.82	82.81
	2472	-0.86	4.54	5.40	-0.86	82.07
	2477	-0.95	4.47	5.42	-0.95	80.40
	2482	-1.04	4.42	5.45	-1.04	78.77
	2487	-1.12	4.40	5.51	-1.12	77.31

仅供北京动思创新科技有限公司

4. FS Pattern

Cut1

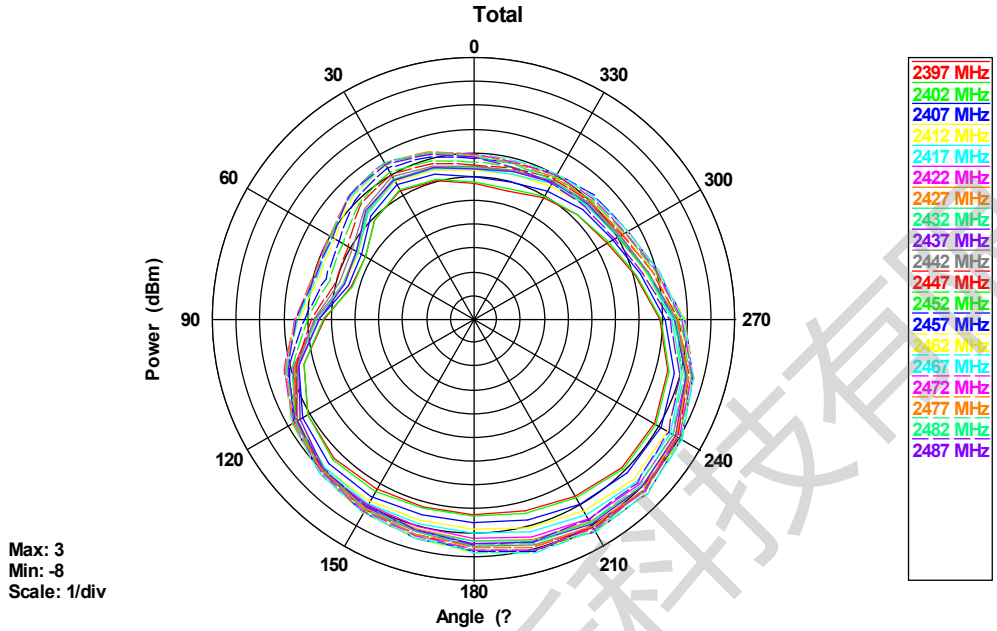

Cut2

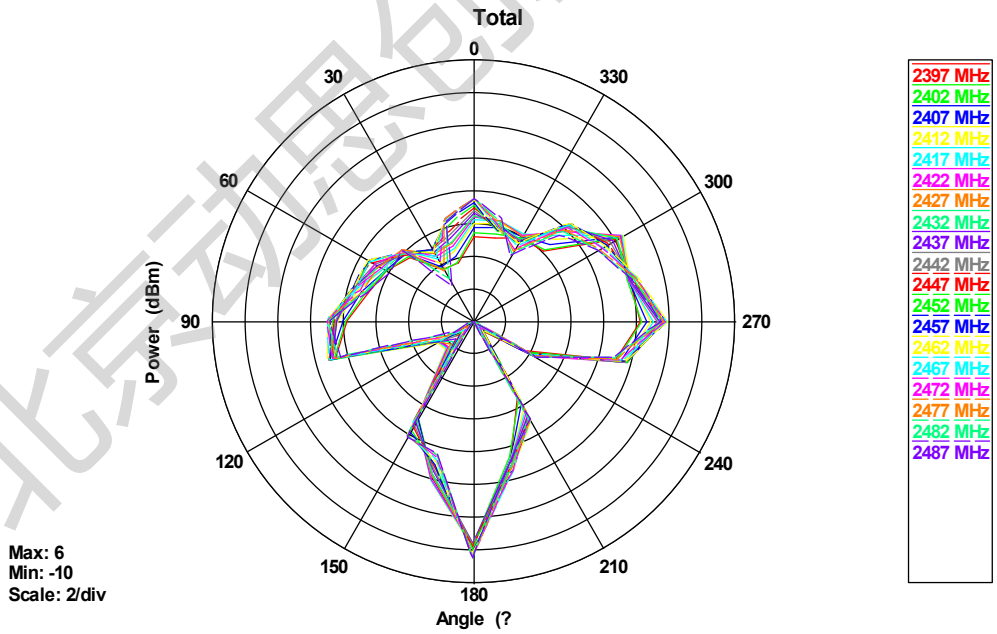

仅供北京动感创新科技有限公司

Cut3

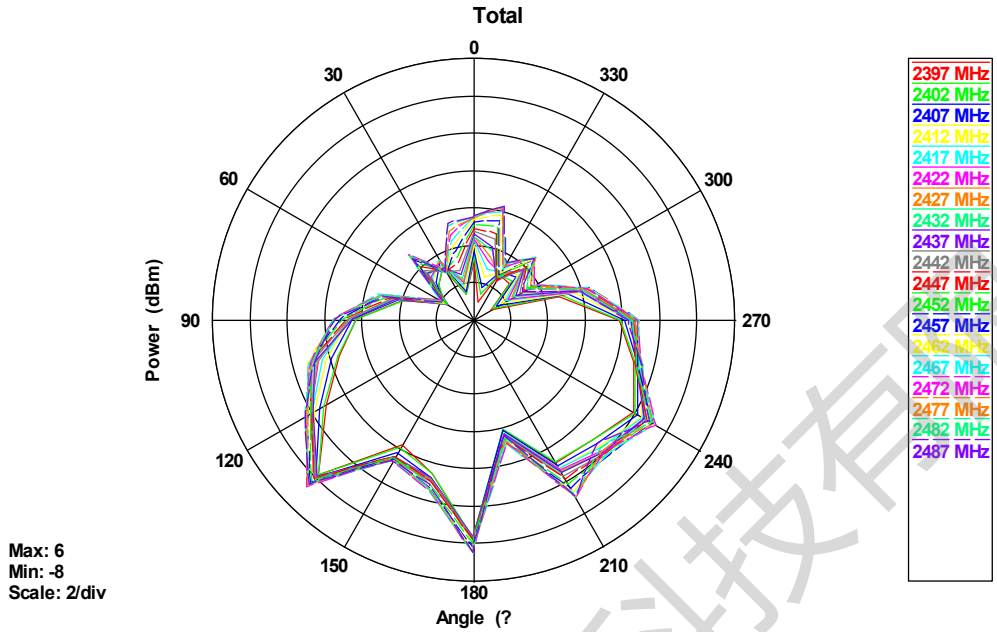

Free Space Gain Pattern

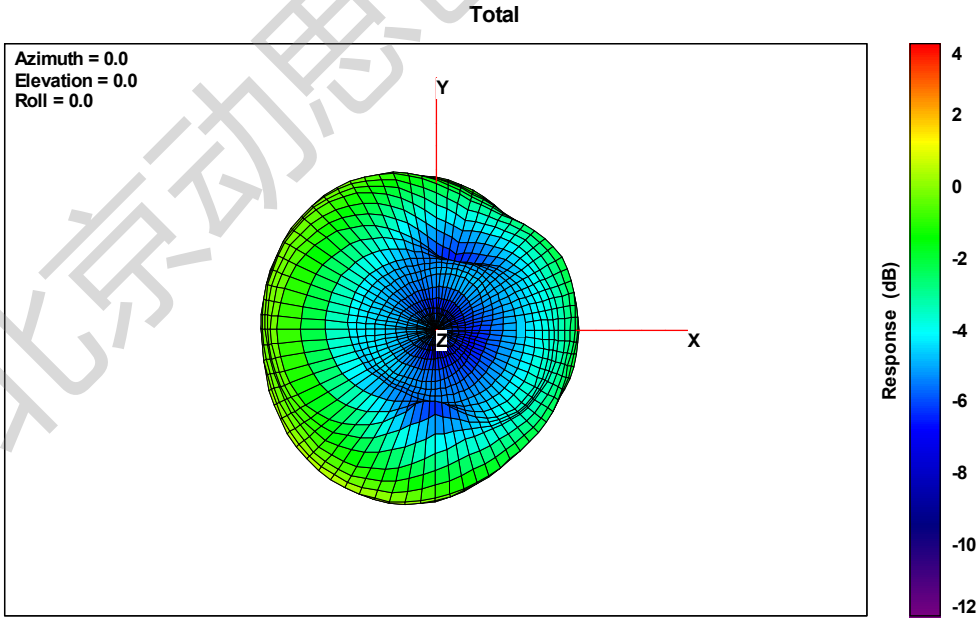

仅供北京动思创新科技有限公司

Total

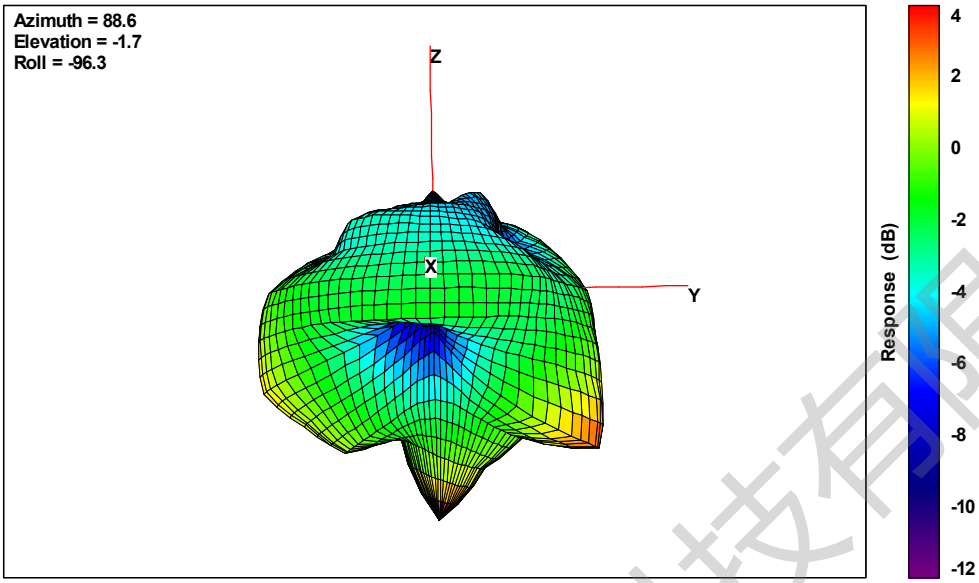

Total

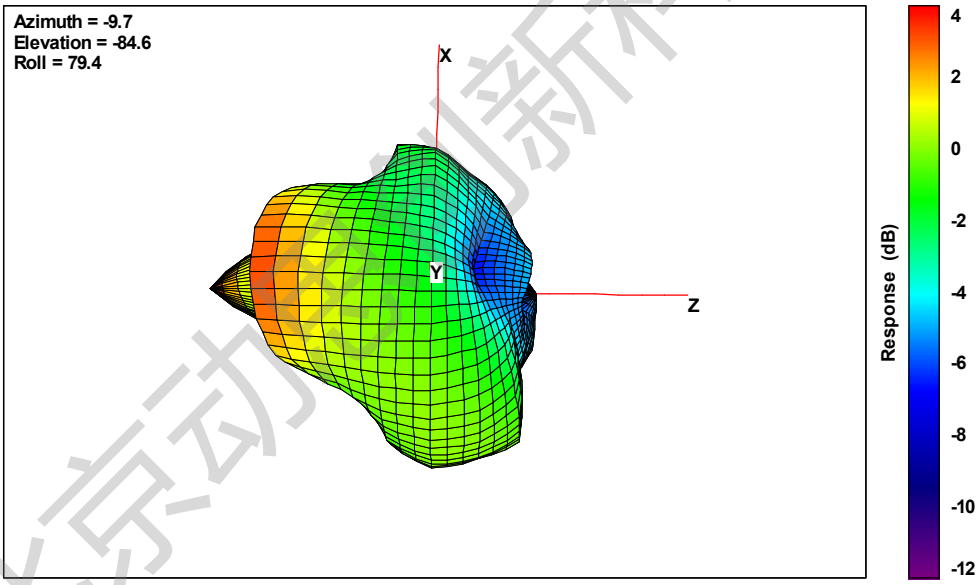

Free Space Gain Pattern

仅供北京动感创新科技有限公司

5. Description for EUT Testing Position

Placed and fixed with tape shown as below.

Initial Position:

Fig. 5-1 Free Space

Fig. 5-2 Free Space

仅供北京动感创新科技有限公司

Testing Position:

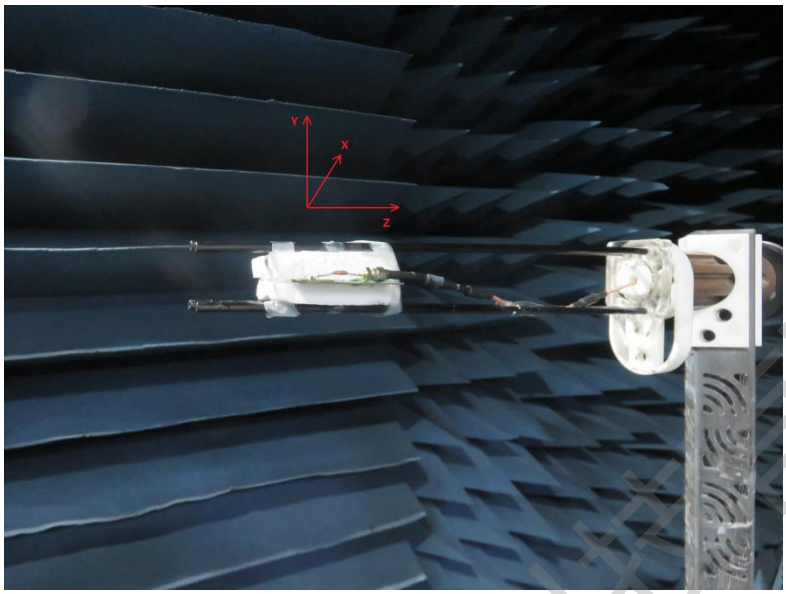

Fig. 5-3 Free Space

--THE END--

仅供北京动思创新科技有限公司