G2 USER'S GUIDE

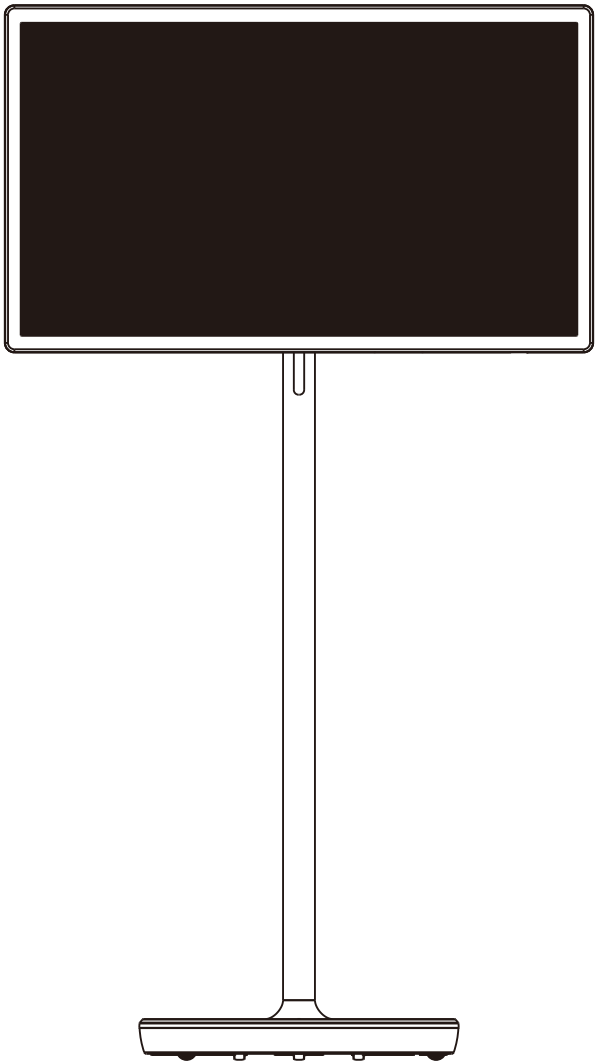

Thank you for choosing our product. To ensure your safe use of this product, please read this user manual carefully before using it and keep it properly.

The G2 is a multifunctional 32-inch portable TV with a unique creative design and practicality. It integrates the functions of a smartphone, tablet, and TV display devices. The body can be moved freely, allowing you to push it to any location for use, including outdoors. It can be used for watching series, listening to music, fitness, installing apps, connecting microphones, and as a device for video conferencing or online learning.

Contents of Instruction

Product Attributes

1. Product host 1
2. Accessories 3
3. Parameters 3

Installation and Storage 4

Function Description

OSD Menu 9
Introduction to Remote Control Functions 9

Product Connection 10

Audio Settings

1. Change sound settings of Windows 10 / Windows 11 11
2. Change sound settings of MAC OS PC 12

Display Mode

1. Windows 10 / Windows 11 Display Settings and Configuration 13
2. MacOS 13 Ventura Display Settings and Configuration 14

Product Attributes

1. Product host

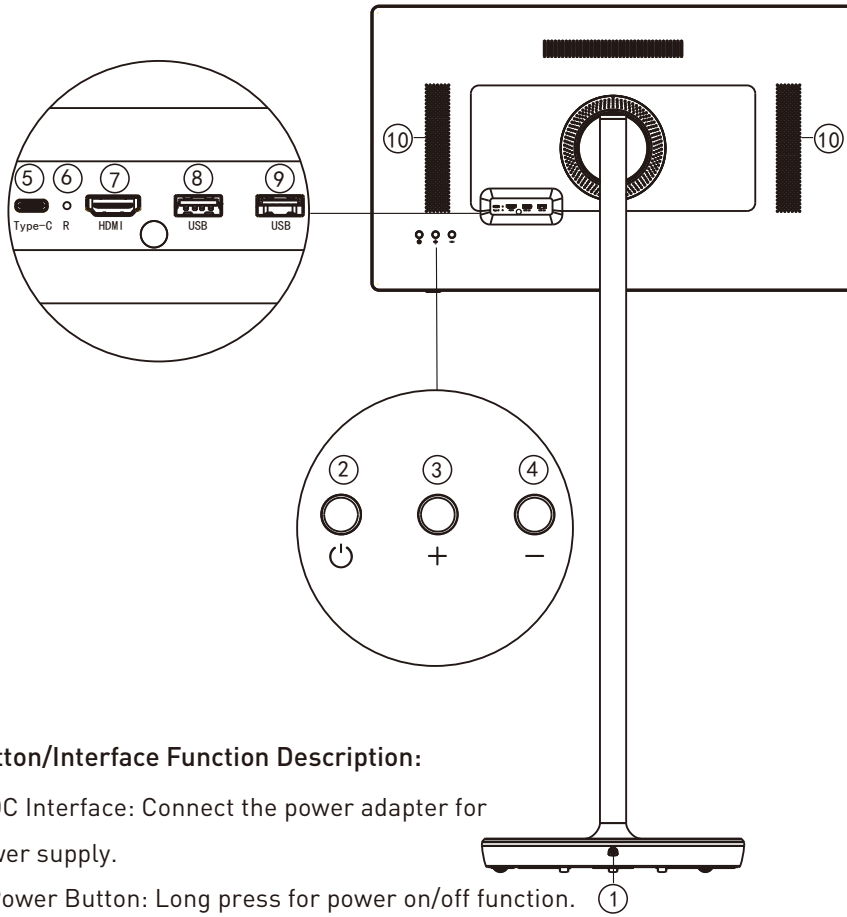

Button/Interface Function Description:

①DC Interface: Connect the power adapter for power supply.

②Power Button: Long press for power on/off function.

③Volume Plus: Adjust to increase volume.

④Volume Minus: Adjust to decrease volume.

⑤Type-C Interface: For downloading and upgrading.

⑥Reset: Force restart the device (press the reset button when the device has issues).

⑦HHDMI Interface Input: Supports connection to notebooks, desktop computers, set-top boxes, PS4, Xbox game consoles, etc.

⑧/⑨USB Interface: Supports USB drives, USB cameras, mice, keyboards, etc.

⑩Speakers: The audio system has two speakers for playing music,

Product Attributes

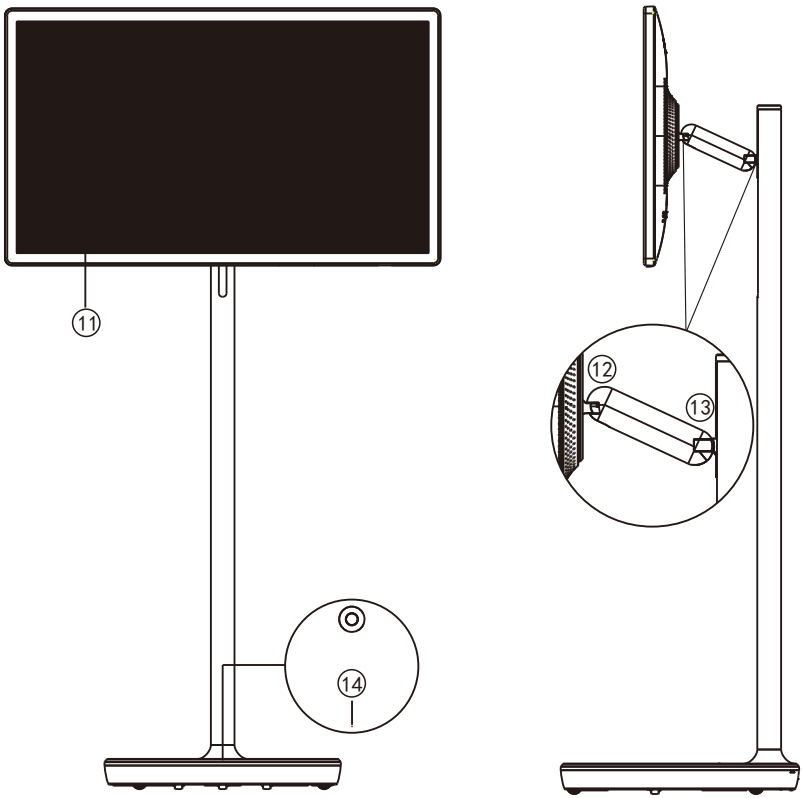

⑪Display Screen: Touch control for the mobile TV screen.

⑫Rotation: Supports both landscape and portrait screen orientation, with the ability to rotate the screen left and right.

⑬Height Adjustment Stand: Adjust the height by up to 20CM.

⑭Indicator Light: Indicates the working status of the circuit, with a red light for charging and a green light for a full battery charge.

Product Attributes

2. Accessories

Display Screen Assembly x1

Base x1

Vertical Pole x1

AC cable x1

19V 3.42A Adapter x1

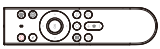

Remote controller x1

Metal base cover x1

Longer screw x1

Shorter screw x4

HDMI cable x1

Phillips Screwdriver x1

3. Parameters

Operating System:	Android13	CPU：	MTK8183 Octa-core Processor
Processor Frequency:	1.8GB	Memory：	6G
Storage Capacity:	128GB	Wifi：	802.11 AC a/b/g/n
Power Adapter:	19V/3.42A	Remote Control：	Supports Bluetooth
Bluetooth:	Bluetooth 4.2	Touch Screen Size：	32-inch 10-point Capacitive Touch Screen
Gravity Sensor：	Supports	Speakers:：	8Ω/8W * 2
Battery Capacity:	148Wh	Stand Height：	1200mm
Type-C：	Download/Upgrade	USB：	2*USB(12-480Mbps)
HDMI：	1*HDMI(Supports DP Input)	Dimensions：	738x435x58mm

Installation and Storage

1. Open the packaging and carefully remove the vertical pole, base, and display screen.

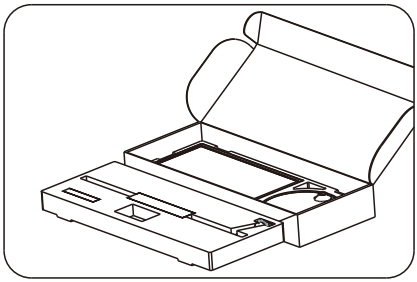

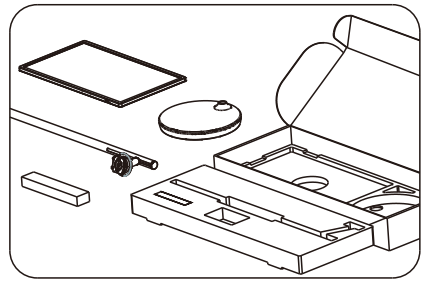

2. Place the base into the slot.

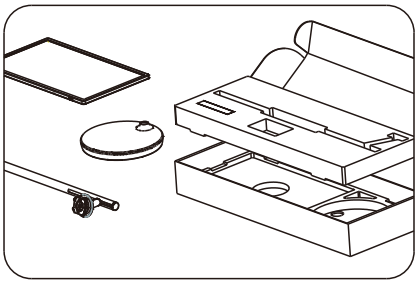

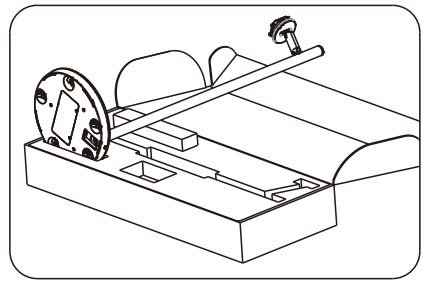

3.① Thread the vertical pole power cord through the base
② Align and insert the vertical pole into the base slot
③ Plug the vertical pole power cord into the indicated power port.

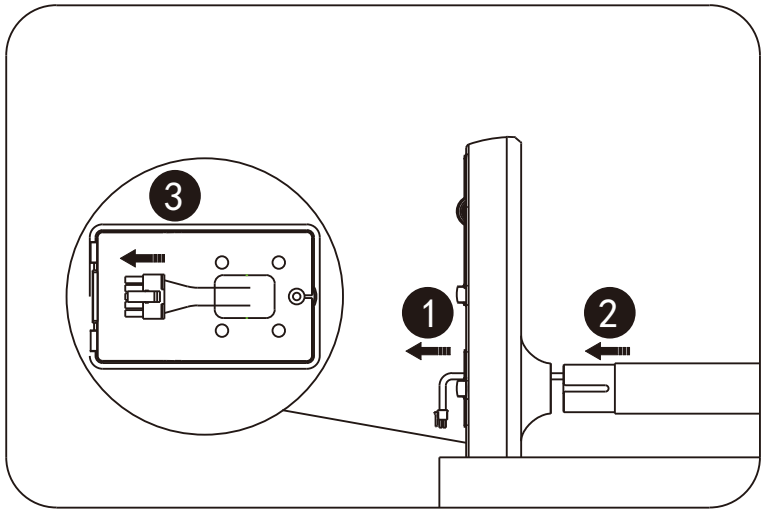

Installation and Storage

4.① Secure the 4 long screws to fix the vertical pole (fix diagonally opposite screws first for stability)
② Close the cover and secure it with the short screw.

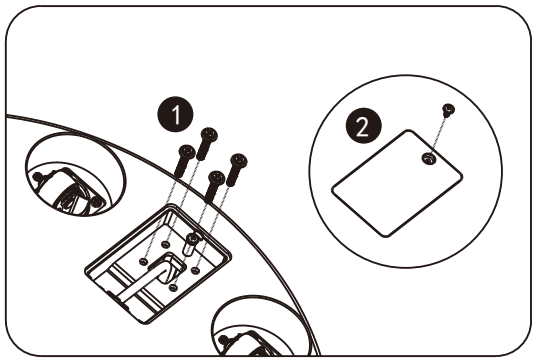

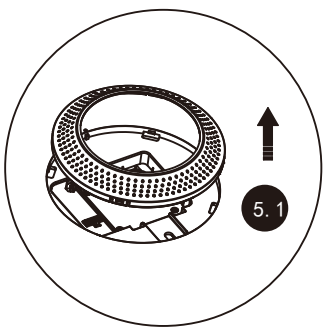

5.1 Remove the round decorative cover from the back of the screen.

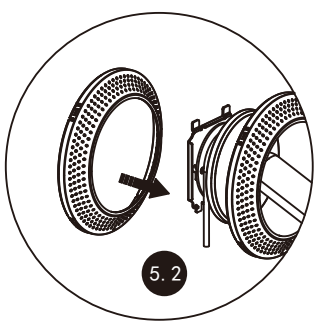

5.2 Slide the round decorative cover over the vertical pole at an angle (place it on the pole first, then install it later).

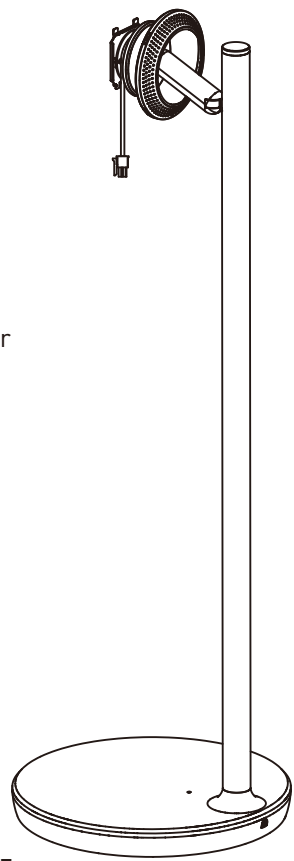

Installation and Storage

6.Tilt the screen upwards and align it with the slot for installation.

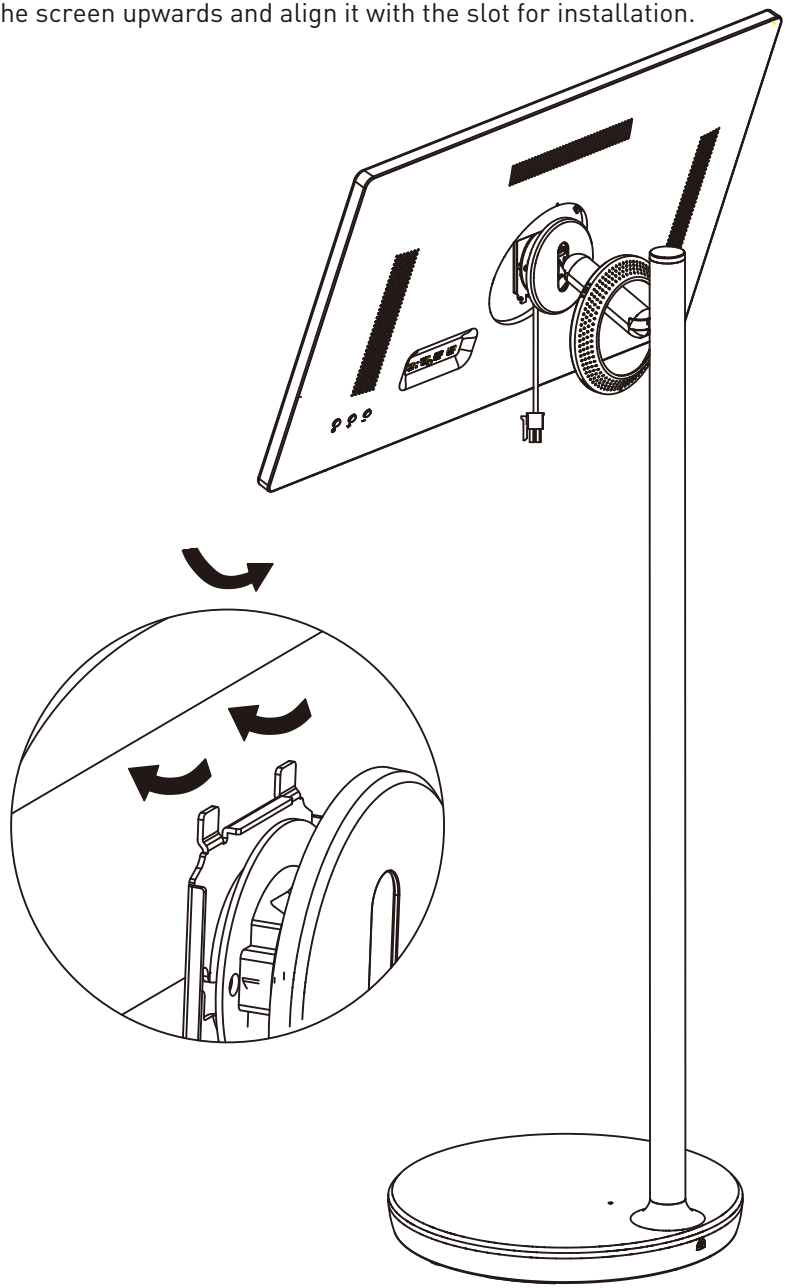

Installation and Storage

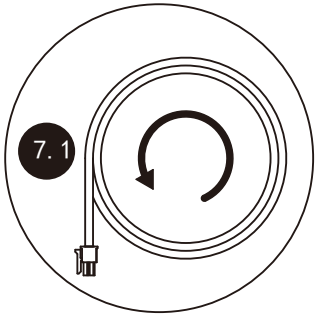

7.1 Wind the power cord counterclockwise.

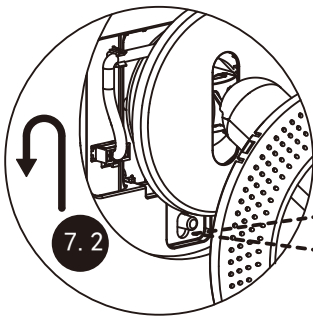

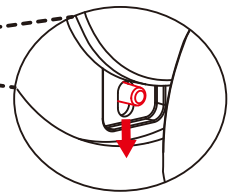

7.2 Secure the power cord and check if the device powers on, as shown in the diagram above.

During the assembly process, if the latch does not fit properly, you need to press down on the quick-release switch.

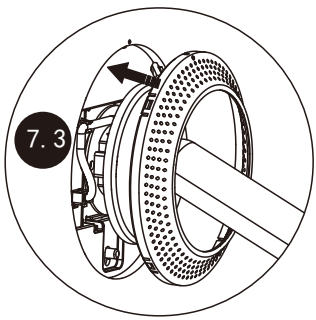

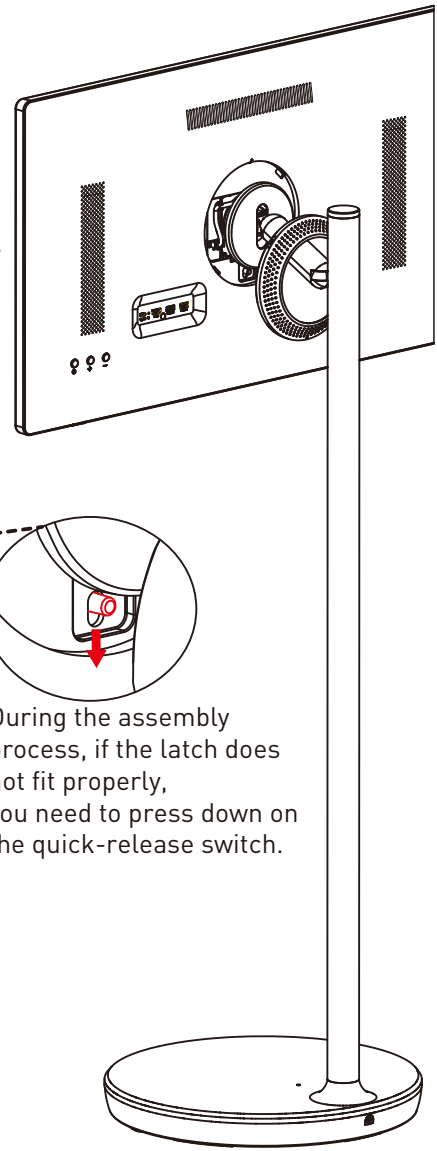

7.3 Align the top slot of the round ring with the top of the screen and press to complete the installation.

Storage

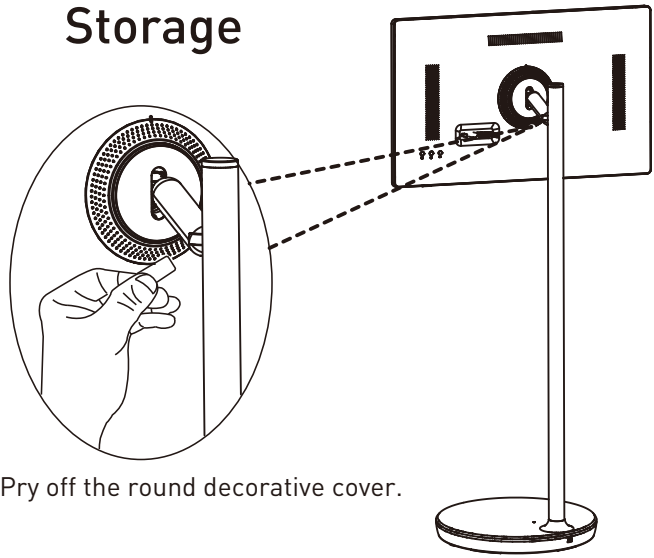

1 Pry off the round decorative cover.

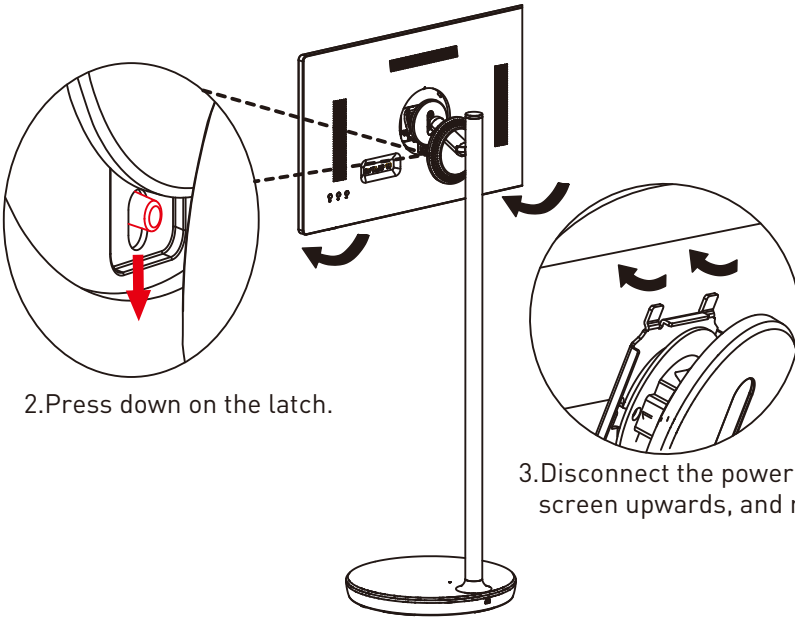

2.Press down on the latch.

3.Disconnect the power cord, tilt the screen upwards, and remove it.

4.Follow the installation steps in reverse order to disassemble and store the components.

Function Description

OSD Menu: Swipe down with one finger to access the quick menu.

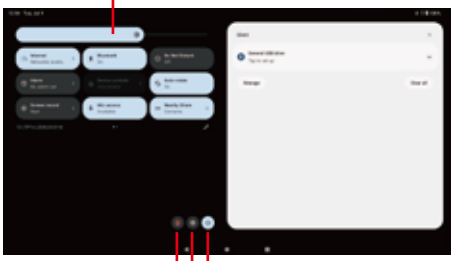

Note: Product Power On/Off Methods

1. Tap the power off icon in the quick menu.
2. Long press the power button for 8-9 seconds to power on/off.

Introduction to Remote Control Functions

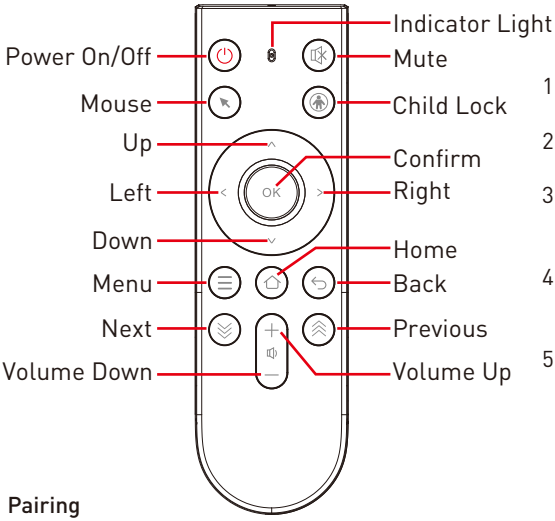

1. Before use, install two AAA batteries (included in the package).
2. Button function: Bluetooth connection sends Bluetooth code value.
3. Child lock button: Long press for 3 seconds to lock the remote control, press again for 3 seconds to unlock.
4. Mouse function: Press once to activate the virtual mouse, press again to deactivate.
5. Video page up and down functionality.

Pairing

1. Remote control pairing broadcast Bluetooth name: portable TV.
2. Pairing operation: Long press the "Confirm" + "Back" buttons on the remote control for 3 seconds until the indicator light flashes, the remote control displays the Bluetooth name as "portable TV", and broadcasts the Bluetooth pairing signal. The indicator light flashes, open the device settings interface — connected devices — pair with new device — select "portable TV" — tap to pair — pairing successful, the light goes out, or if pairing is not successful within 30 seconds, stop broadcasting the signal, the light goes out, continue to press the combination key for 3 seconds to pair until successful.
3. If the remote control has no pairing information, press any key to broadcast the pairing signal for 5 seconds. For a better remote control experience, download the "TV" version of the app from the Google Play Store.

Product Connection

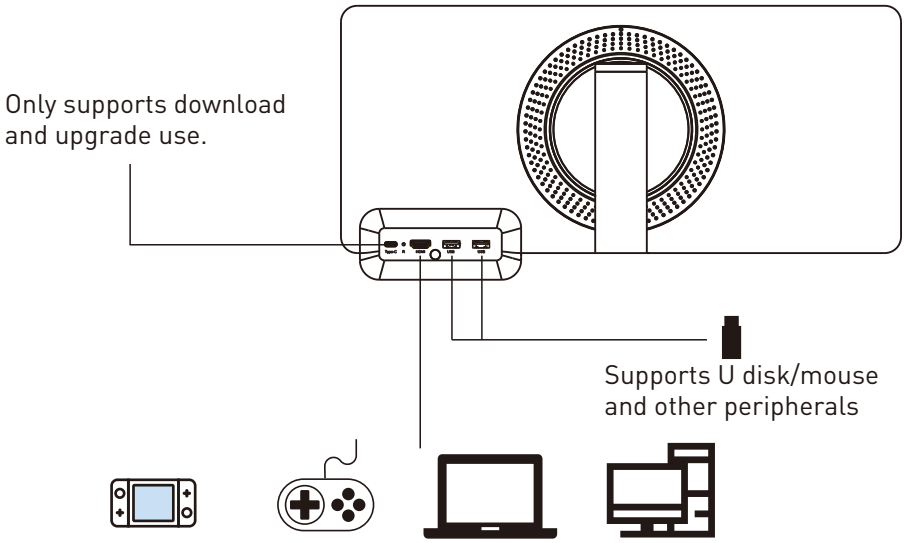

Supports notebook, desktop computer, set-top box, Mini PC, PS4, Switch, Xbox game console, and other devices with HDMI output interfaces

After connecting the HDMI cable, click the icon to enter the splitter mode.

Signal Line Connection

1. Connect one end of the HDMI cable to the HDMI interface of the display, and the other end to a video output device with an HDMI interface (such as a notebook, computer, game console, etc.).
2. Connecting USB peripherals can also be done through a USB expansion dock, connecting various USB peripherals.

Audio Settings

1. Change sound settings of Windows 10 / Windows 11

1.1 Right click the Loudspeaker icon located in the bottom-right corner .

1.2 Select "switch on sound " in pop-up dialog box

1.3 Left click "turn on sound settings" and pop-up the box as provided,Here users can set about sound;

Here users can set about sound

1. Master volume;
2. Select output device: (G2 / Speaker);
3. Device attributes.

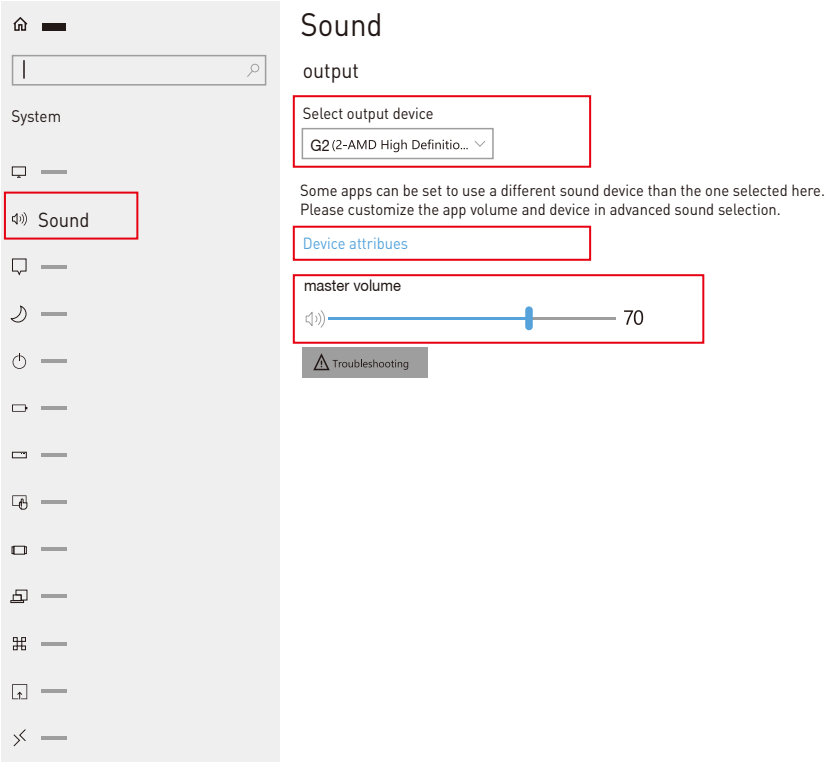

Note: Only need to set when connected to HDMI and entering split-screen mode.

2. Change sound settings of MAC OS PC

2.1. Choose Apple menu > System Settings

2.2. Click on "Output," and then choose the desired device from the list of available sound output options.

output devices：（G2 / Speaker）

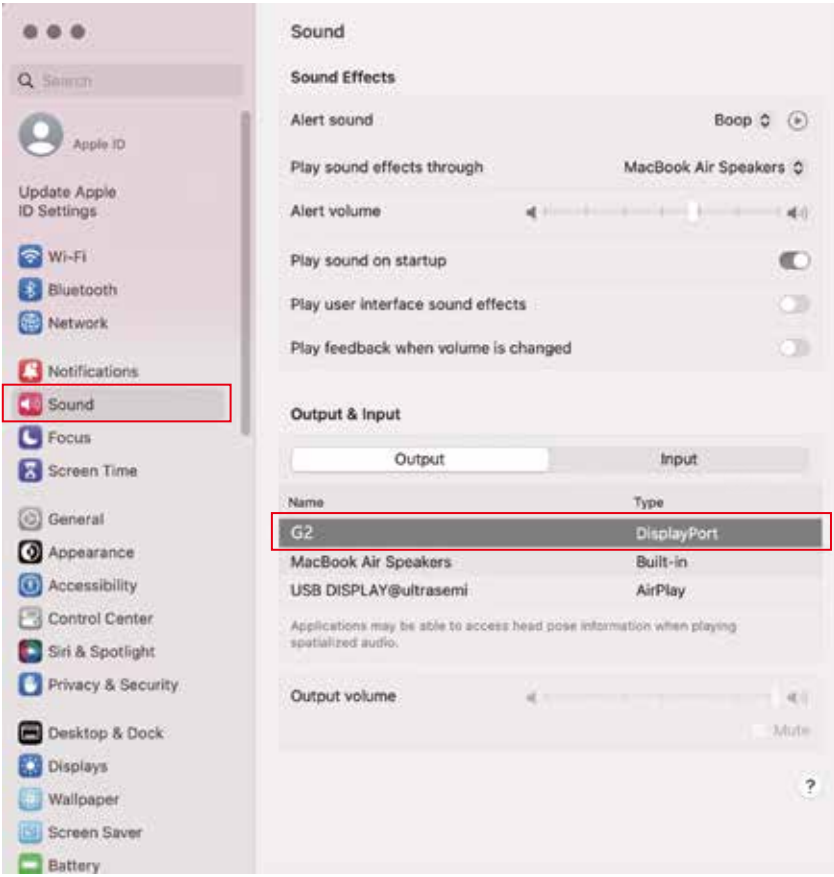

Note: Only need to set when connected to HDMI and entering split-screen mode.

Display Mode

1. Windows 10 / Windows 11 Display Settings

1.1 Right-click a blank area of the desktop. Select "Display Settings" from the pop-up dialogue box. Left-click "Display Settings" to open the settings dialogue box, as shown.

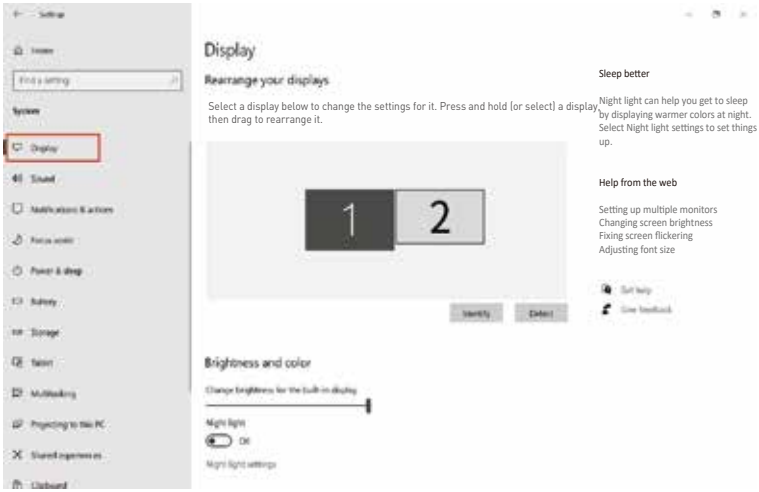

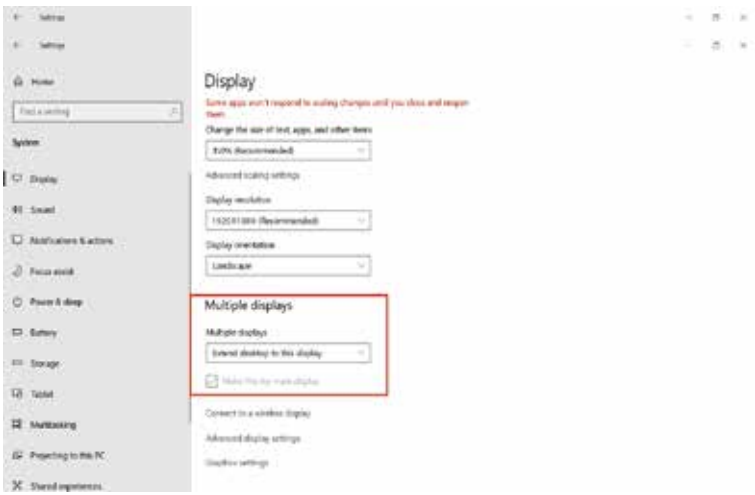

1.2 Under the "Rearrange yours displays" section, drag and drop each display to rearrange them according to their physical layout of your desktop. Scroll down to the bottom of the page to further configure the display for extended or mirrored mode.

Note: Only need to set when connected to HDMI and entering split-screen mode.

2. MacOS 13 Ventura Display Settings

2.1 Enter the "System Preferences" menu

2.2 Configure your monitor

In this menu, you can set the resolution and mirror//extend the display you want.

2.3 Arrange Displays

To re-arrange displays, drag them to the desired position.
To mirror displays, hold Option key while dragging them on top of each other.
To relocate the menu bar, drag it to a different display.

Note: Only need to set when connected to HDMI and entering split-screen mode.

This device complies with part 15 of the FCC Rules. Operation is subject to the following two conditions: (1) This device may not cause harmful interference, and (2) this device must accept any interference received, including interference that may cause undesired operation.

Any Changes or modifications not expressly approved by the party responsible for compliance could void the user's authority to operate the equipment.

Note: This equipment has been tested and found to comply with the limits for a Class B digital device, pursuant to part 15 of the FCC Rules. These limits are designed to provide reasonable protection against harmful interference in a residential installation. This equipment generates uses and can radiate radio frequency energy and, if not installed and used in accordance with the instructions, may cause harmful interference to radio communications. However, there is no guarantee that interference will not occur in a particular installation. If this equipment does cause harmful interference to radio or television reception, which can be determined by turning the equipment off and on, the user is encouraged to try to correct the interference by one or more of the following measures:

-Reorient or relocate the receiving antenna.

-Increase the separation between the equipment and receiver.

-Connect the equipment into an outlet on a circuit different from that to which the receiver is connected.

-Consult the dealer or an experienced radio/TV technician for help.

-This equipment complies with FCC radiation exposure limits set forth for an uncontrolled environment. This equipment should be installed and operated with minimum distance 20cm between the radiator & your body.
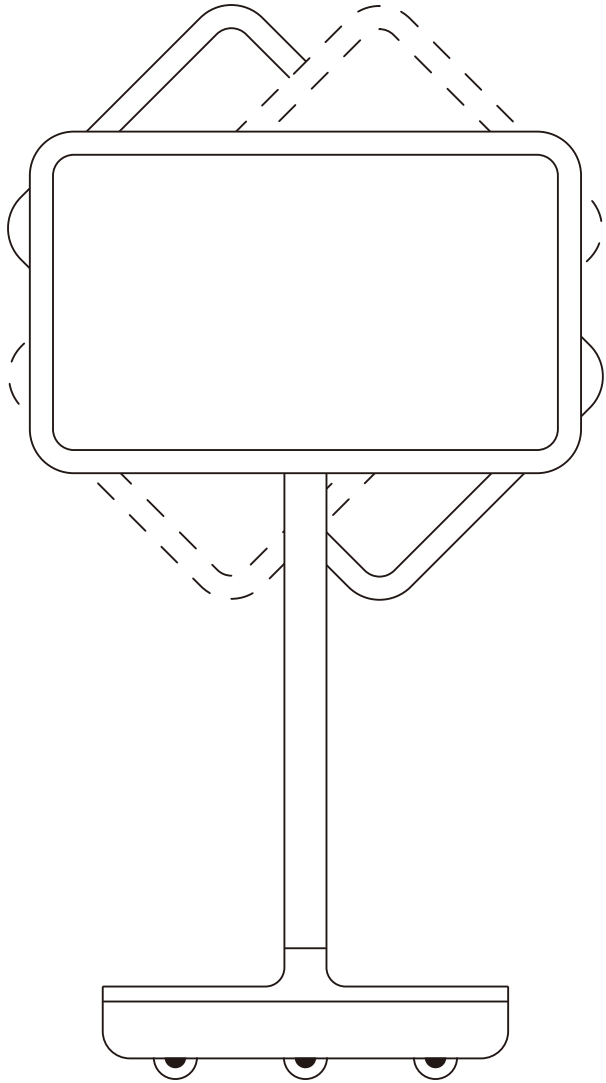
G2 USER'S GUIDE