TEST REPORT
FCC ID:2BKLS-HN962

Report Number.....:	ZKT-240822L10327E-2
Date of Test.....	July.20,2024-Aug.25,2024
Date of issue.....:	Aug.28,2024
Total number of pages.....	35
Test Result .....:	PASS
Testing Laboratory.....:	**Shenzhen ZKT Technology Co., Ltd.**
Address .....:	1/F, No. 101, Building B, No. 6, Tangwei Community Industrial Avenue, Fuhai Street, Bao'an District, Shenzhen, China
Applicant's name .....:	**Xuzhou Huiniao Technology Consulting Services Co., Ltd**
Address .....:	4F, Building A8, Xuzhou National Security Science and Technology Industrial Park,Xuzhou City,China
Manufacturer's name .....:	**Xuzhou Huiniao Technology Consulting Services Co., Ltd**
Address .....:	4F, Building A8, Xuzhou National Security Science and Technology Industrial Park,Xuzhou City,China
Test specification:	
Standard.....:	FCC CFR Title 47 Part 15 Subpart C Section 15.247 ANSI C63.10:2013
Test procedure.....:	/
Non-standard test method .....:	N/A
Test Report Form No.....:	TRF-EL-111_V0
Test Report Form(s) Originator.....:	ZKT Testing
Master TRF .....:	Dated: 2020-01-06

This device described above has been tested by ZKT, and the test results show that the equipment under test (EUT) is in compliance with the FCC requirements. And it is applicable only to the tested sample identified in the report.
This report shall not be reproduced except in full, without the written approval of ZKT, this document may be altered or revised by ZKT, personal only, and shall be noted in the revision of the document.

Product name.....:	**Smart display**
Trademark .....:	N/A
Model/Type reference.....:	HN-962
Ratings.....:	DC 12V by adapter

Testing procedure and testing location:

Testing Laboratory.....:	**Shenzhen ZKT Technology Co., Ltd.**
Address.....:	1/F, No. 101, Building B, No. 6, Tangwei Community Industrial Avenue, Fuhai Street, Bao'an District, Shenzhen, China
Tested by (name + signature).....:	Jim Liu
Reviewer (name + signature).....:	Jackson Fang
Approved (name + signature).....:	Lake Xie

Table of Contents **Page**

1.VERSION 5
2. SUMMARY OF TEST RESULTS 6
2.1 TEST FACILITY 7
2.2 MEASUREMENT UNCERTAINTY 7
3. GENERAL INFORMATION 8
3.1 GENERAL DESCRIPTION OF EUT 8
3.2 DESCRIPTION OF TEST MODES 9
3.3 BLOCK DIGRAM SHOWING THE CONFIGURATION OF SYSTEM TESTED 10
3.4 DESCRIPTION OF SUPPORT UNITS(CONDUCTED MODE) 10
3.5 EQUIPMENTS LIST FOR ALL TEST ITEMS 11
4. EMC EMISSION TEST 13
4.1 CONDUCTED EMISSION MEASUREMENT 13
4.1.1 POWER LINE CONDUCTED EMISSION Limits 13
4.1.2 TEST PROCEDURE 13
4.1.3 DEVIATION FROM TEST STANDARD 13
4.1.4 TEST SETUP 14
4.1.5 EUT OPERATING CONDITIONS 14
4.2.1 RADIATED EMISSION LIMITS 17
4.2.2 TEST PROCEDURE 18
4.2.3 DEVIATION FROM TEST STANDARD 18
4.2.4 TEST SETUP 18
4.2.5 EUT OPERATING CONDITIONS 19
5.RADIATED BAND EMISSION MEASUREMENT 24
5.1 TEST REQUIREMENT: 24
5.2 TEST PROCEDURE 24
5.3 DEVIATION FROM TEST STANDARD 24
5.4 TEST SETUP 25
5.5 EUT OPERATING CONDITIONS 25
5.6 TEST RESULT 26
6.POWER SPECTRAL DENSITY TEST 27
6.1 APPLIED PROCEDURES / LIMIT 27
6.2 TEST PROCEDURE 27
6.3 DEVIATION FROM STANDARD 27
6.4 TEST SETUP 27
6.5 EUT OPERATION CONDITIONS 27
6.6 TEST RESULT 28

Table of Contents **Page**

7. -6 DB BANDWIDTH 29
7.1 APPLIED PROCEDURES / LIMIT 29
7.2 TEST PROCEDURE 29
7.3 DEVIATION FROM STANDARD 29
7.4 TEST SETUP 29
7.5 EUT OPERATION CONDITIONS 29
7.6 TEST RESULT 30
8.PEAK OUTPUT POWER TEST 31
8.1 APPLIED PROCEDURES / LIMIT 31
8.2 TEST PROCEDURE 31
8.3 DEVIATION FROM STANDARD 31
8.4 TEST SETUP 31
8.5 EUT OPERATION CONDITIONS 31
8.6 TEST RESULT 31
9. CONDUCTED BAND EDGE AND SPURIOUS EMISSION 32
9.1 APPLICABLE STANDARD 32
9.2 TEST PROCEDURE 32
9.3 DEVIATION FROM STANDARD 32
9.4 TEST SETUP 32
9.5 EUT OPERATION CONDITIONS 32
10.ANTENNA REQUIREMENT 33
11. TEST SETUP PHOTO 34
12. EUT CONSTRUCTIONAL DETAILS 34

1.VERSION

Report No.	Version	Description	Approved
ZKT-240822L10327E-2	Rev.01	Initial issue of report	Aug.28,2024

2. SUMMARY OF TEST RESULTS

Test procedures according to the technical standards:

FCC Part15 (15.247) , Subpart C			
Standard Section	Test Item	Judgment	Remark
FCC part 15.203/15.247 (c)	Antenna requirement	PASS	
FCC part 15.207	AC Power Line Conducted Emission	PASS	
FCC part 15.247 (b)(3)	Conducted Peak Output Power	PASS	
FCC part 15.247 (a)(2)	-6dB Bandwidth	PASS	
FCC part 15.247 (e)	Power Spectral Density	PASS	
FCC part 15.247(d)	Band Edge	PASS	
FCC part 15.205/15.209	Spurious Emission	PASS	

NOTE:

(1)“N/A” denotes test is not applicable in this Test Report

2.1 TEST FACILITY

Shenzhen ZKT Technology Co., Ltd.
Add. : 1/F, No. 101, Building B, No. 6, Tangwei Community Industrial Avenue, Fuhai Street, Bao'an District, Shenzhen, China

FCC Test Firm Registration Number: 692225
Designation Number: CN1299
IC Registered No.: 27033

2.2 MEASUREMENT UNCERTAINTY

The reported uncertainty of measurement y ± U，where expended uncertainty U is based on a standard uncertainty multiplied by a coverage factor of k=2，providing a level of confidence of approximately 95 %。

No.	Item	Uncertainty
1	3m camber Radiated spurious emission(9KHz-30MHz)	U=4.5dB
2	3m camber Radiated spurious emission(30MHz-1GHz)	U=4.8dB
3	3m chamber Radiated spurious emission(1GHz-6GHz)	U=4.9dB
4	3m chamber Radiated spurious emission(6GHz-40GHz)	U=5.0dB
5	Conducted disturbance	U=3.2dB
6	RF Band Edge	U=1.68dB
7	RF power conducted	U=1.86dB
8	RF conducted Spurious Emission	U=2.2dB
9	RF Occupied Bandwidth	U=1.8dB
10	RF Power Spectral Density	U=1.75dB
11	humidity uncertainty	U=5.3%
12	Temperature uncertainty	U=0.59℃

3. GENERAL INFORMATION

3.1 GENERAL DESCRIPTION OF EUT

Product Name:	Smart display
Model No.:	HN-962
Test sample(s) ID:	ZKT-240822L10327
Sample(s) Status:	Engineer sample
Hardware Version:	V2
Software Version:	V1.0
Operation Frequency:	2402MHz~2480MHz
Channel Numbers:	40
Channel Separation:	2MHz
Modulation Type:	GFSK
Antenna Type:	FPC ANT
Antenna gain:	2.78 dBi
Power supply:	DC 12V by adapter

Operation Frequency each of channel							
Channel	Frequency	Channel	Frequency	Channel	Frequency	Channel	Frequency
1	2402 MHz	11	2422 MHz	21	2442 MHz	31	2462 MHz
2	2404 MHz	12	2424 MHz	22	2444 MHz	32	2464 MHz
3	2406 MHz	13	2426 MHz	23	2446 MHz	33	2466 MHz
4	2408 MHz	14	2428 MHz	24	2448 MHz	34	2468 MHz
5	2410 MHz	15	2430 MHz	25	2450 MHz	35	2470 MHz
6	2412 MHz	16	2432 MHz	26	2452 MHz	36	2472 MHz
7	2414 MHz	17	2434 MHz	27	2454 MHz	37	2474 MHz
8	2416 MHz	18	2436 MHz	28	2456 MHz	38	2476 MHz
9	2418 MHz	19	2438 MHz	29	2458 MHz	39	2478 MHz
10	2420 MHz	20	2440 MHz	30	2460 MHz	40	2480 MHz

Note:
In section 15.31(m), regards to the operating frequency range over 10 MHz, the Lowest frequency, the middle frequency, and the highest frequency of channel were selected to perform the test, and the selected channel see below:

Channel	**Frequency**
The lowest channel	2402MHz
The middle channel	2440MHz
The Highest channel	2480MHz

3.2 DESCRIPTION OF TEST MODES

Transmitting mode	Keep the EUT in continuously transmitting mode
Charging mode	Keep the EUT in Charging mode.
Remark: During the test, the test voltage was tuned from 85% to 115% of the nominal rated supply voltage, and found that the worst case was under the nominal rated supply condition. So the report just shows that condition's data.	

Test Software	BLE Test Tool
Power level setup	Default

3.3 BLOCK DIGRAM SHOWING THE CONFIGURATION OF SYSTEM TESTED

Conducted Emission

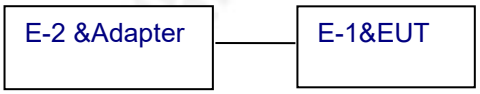

Radiated Emission

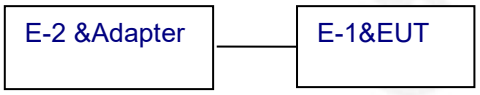

Conducted Spurious

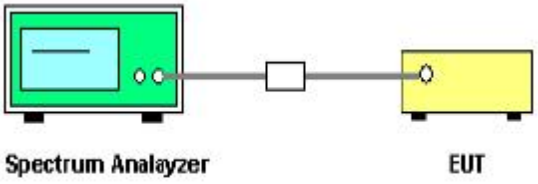

3.4 DESCRIPTION OF SUPPORT UNITS(CONDUCTED MODE)

The EUT has been tested as an independent unit together with other necessary accessories or support units. The following support units or accessories were used to form a representative test configuration during the tests.

Item	Equipment	Mfr/Brand	Model/Type No.	Series No.	Note
E-1	Smart display	Autel Robotics	HN-962	N/A	EUT
E-2	Power adapter	N/A	N/A	N/A	AE

Item	Shielded Type	Ferrite Core	Length	Note

Note:

(1) The support equipment was authorized by Declaration of Confirmation.
(2) For detachable type I/O cable should be specified the length in cm in 『Length』 column.

3.5 EQUIPMENTS LIST FOR ALL TEST ITEMS

Conducted emissions Test

Item	Kind of Equipment	Manufacturer	Type No.	Serial No.	Firmware Version	Last calibration	Calibrated until
1	LISN	R&S	ENV216	101471	N/A	Nov. 14, 2023	Nov. 13, 2024
2	LISN	CYBERTEK	EM5040A	E1850400149	N/A	Nov. 02, 2023	Nov. 01, 2024
3	Test Cable	N/A	C-01	N/A	N/A	Nov. 02, 2023	Nov. 01, 2024
4	Test Cable	N/A	C-02	N/A	N/A	Nov. 02, 2023	Nov. 01, 2024
5	Test Cable	N/A	C-03	N/A	N/A	Nov. 02, 2023	Nov. 01, 2024
6	EMI Test Receiver	R&S	ESCI3	101393	4.42 SP3	Nov. 02, 2023	Nov. 01, 2024
7	Triple-Loop Antenna	N/A	RF300	N/A	N/A	Nov. 02, 2023	Nov. 01, 2024
8	Absorbing Clamp	DZ	ZN23201	15034	N/A	Nov. 07, 2023	Nov. 06, 2024
9	EMC Software	Frad	EZ-EMC	Ver.EMC-CON 3A1.1	N/A	\	\

Radiated emissions Test

Item	Equipment	Manufacturer	Type No.	Serial No.	Firmware Version	Last calibration	Calibrated until
1	Spectrum Analyzer (9kHz-26.5GHz)	KEYSIGHT	9020A	MY55370835	A.17.05	Nov. 02, 2023	Nov. 01, 2024
2	Spectrum Analyzer (10kHz-39.9GHz)	R&S	FSV40-N	100363	1.71 SP2	Nov. 02, 2023	Nov. 01, 2024
3	EMI Test Receiver (9kHz-7GHz)	R&S	ESCI7	100969	4.32	Nov. 02, 2023	Nov. 01, 2024
4	Bilog Antenna (30MHz-1500MHz)	Schwarzbeck	VULB9168	N/A	N/A	Nov. 13, 2023	Nov. 12, 2024
5	Horn Antenna (1GHz-18GHz)	Agilent	AH-118	071145	N/A	Nov. 13, 2023	Nov. 12, 2024
6	Horn Antenna (15GHz-40GHz)	A.H.System	SAS-574	588	N/A	Nov. 13, 2023	Nov. 12, 2024
7	Loop Antenna	TESEQ	HLA6121	58357	N/A	Nov. 16, 2023	Nov. 15, 2024
8	Amplifier (30-1000MHz)	EM Electronics	EM330 Amplifier	60747	N/A	Nov. 02, 2023	Nov. 01, 2024
9	Amplifier (1GHz-26.5GHz)	HuiPu	8449B	3008A00315	N/A	Nov. 02, 2023	Nov. 01, 2024
10	Amplifier (500MHz-40GHz)	QuanJuDa	DLE-161	097	N/A	Nov. 02, 2023	Nov. 01, 2024
11	Test Cable	N/A	R-01	N/A	N/A	Nov. 02, 2023	Nov. 01, 2024
12	Test Cable	N/A	R-02	N/A	N/A	Nov. 02, 2023	Nov. 01, 2024
13	Test Cable	N/A	R-03	N/A	N/A	Nov. 02, 2023	Nov. 01, 2024
14	Test Cable	N/A	RF-01	N/A	N/A	Nov. 02, 2023	Nov. 01, 2024
15	Test Cable	N/A	RF-02	N/A	N/A	Nov. 02, 2023	Nov. 01, 2024
16	Test Cable	N/A	RF-03	N/A	N/A	Nov. 02, 2023	Nov. 01, 2024
17	ESG Signal Generator	Agilent	E4421B	N/A	B.03.84	Nov. 02, 2023	Nov. 01, 2024
18	Signal Generator	Agilent	N5182A	N/A	A.01.87	Nov. 02, 2023	Nov. 01, 2024
19	Magnetic Field Probe Tester	Narda	ELT-400	0-0344	N/A	Nov. 16, 2023	Nov. 15, 2024
20	Wideband Radio Communication Test	R&S	CMW500	106504	V 3.7.22	Nov. 02, 2023	Nov. 01, 2024
21	MWRF Power Meter Test system	MW	MW100-RF CB	N/A	N/A	Nov. 02, 2023	Nov. 01, 2024
22	D.C. Power Supply	LongWei	TPR-6405D	N/A	N/A	\	\
23	EMC Software	Frad	EZ-EMC	Ver.EMC-CO N 3A1.1	N/A	\	\
24	RF Software	MW	MTS8310	V2.0.0.0	N/A	\	\
25	Turntable	MF	MF-7802BS	N/A	N/A	\	\
26	Antenna tower	MF	MF-7802BS	N/A	N/A	\	\

4. EMC EMISSION TEST

4.1 CONDUCTED EMISSION MEASUREMENT

Test Requirement:	FCC Part15 C Section 15.207
Test Method:	ANSI C63.10:2013
Test Frequency Range:	150KHz to 30MHz
Receiver setup:	RBW=9KHz, VBW=30KHz, Sweep time=auto

4.1.1 POWER LINE CONDUCTED EMISSION Limits

FREQUENCY (MHz)	Limit (dBuV)		Standard
	Quas-peak	Average	
0.15 -0.5	66 - 56 *	56 - 46 *	FCC
0.50 -5.0	56.00	46.00	FCC
5.0 -30.0	60.00	50.00	FCC

Note:

(1) *Decreases with the logarithm of the frequency.

4.1.2 TEST PROCEDURE

a. The EUT was placed 0.8 meters from the horizontal ground plane with EUT being connected to the power mains through a line impedance stabilization network (LISN). All other support equipments powered from additional LISN(s). The LISN provide 50 Ohm/ 50uH of coupling impedance for the measuring instrument.
b. Interconnecting cables that hang closer than 40 cm to the ground plane shall be folded back and forth in the center forming a bundle 30 to 40 cm long.
c. I/O cables that are not connected to a peripheral shall be bundled in the center. The end of the cable may be terminated, if required, using the correct terminating impedance. The overall length shall not exceed 1 m.
d. LISN at least 80 cm from nearest part of EUT chassis.
e. For the actual test configuration, please refer to the related Item –EUT Test Photos.

4.1.3 DEVIATION FROM TEST STANDARD

No deviation

4.1.4 TEST SETUP

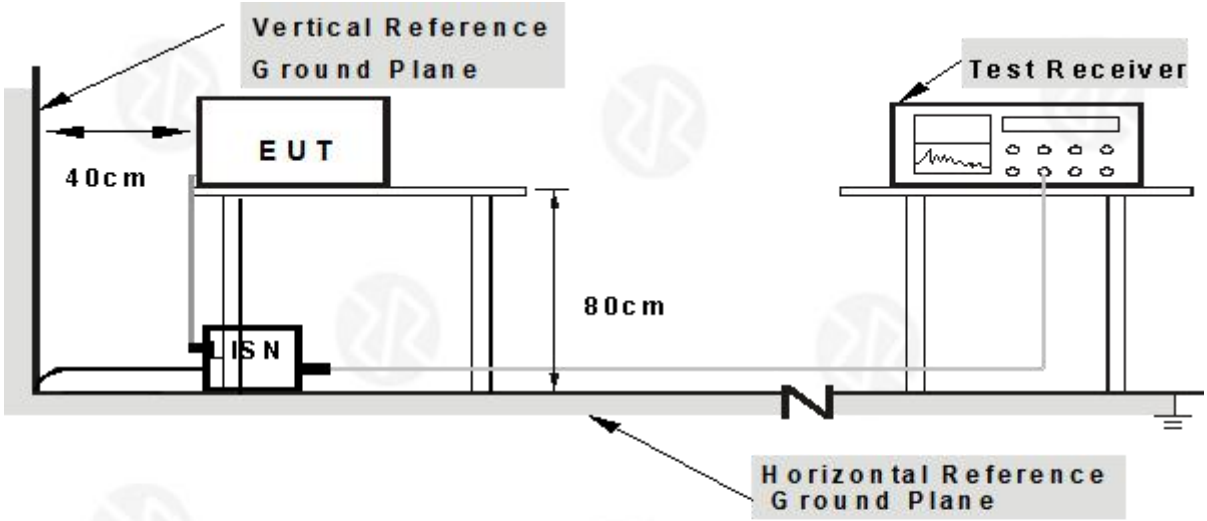

Note: 1.Support units were connected to second LISN.
2.Both of LISNs (AMN) are 80 cm from EUT and at least 80 from other units and other metal planes

4.1.5 EUT OPERATING CONDITIONS

The EUT was configured for testing in a typical fashion (as a customer would normally use it). The EUT has been programmed to Charging during test. This operating condition was tested and used to collect the included data.

We pretest AC 120V and AC 230V, the worst voltage was AC 120V and the data recording in the report.

4.1.6 Test Result

Temperature :	26℃	Relative Humidity:	54%
Pressure :	101kPa	Phase :	L
Test Voltage :	AC 120V/60Hz	Test Mode :	TX -2402MHz

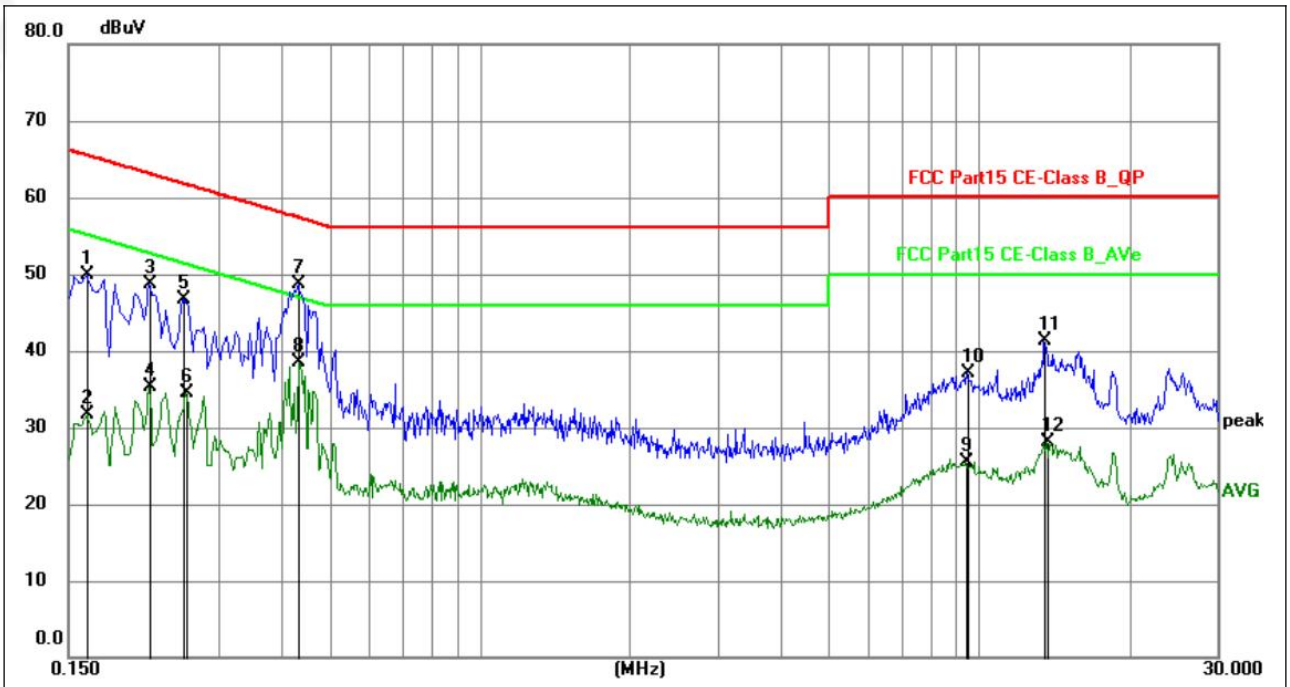

No.	Frequency (MHz)	Reading (dBuV)	Factor (dB)	Level (dBuV)	Limit (dBuV)	Margin (dB)	Detector	P/F
1	0.1635	28.97	20.91	49.88	65.28	-15.40	QP	P
2	0.1635	10.81	20.91	31.72	55.28	-23.56	AVG	P
3	0.2174	27.58	21.03	48.61	62.92	-14.31	QP	P
4	0.2174	14.30	21.03	35.33	52.92	-17.59	AVG	P
5	0.2535	25.79	21.01	46.80	61.64	-14.84	QP	P
6	0.2580	13.45	21.01	34.46	51.50	-17.04	AVG	P
7	0.4334	27.77	20.92	48.69	57.19	-8.50	QP	P
8	0.4334	17.52	20.92	38.44	47.19	-8.75	AVG	P
9	9.4425	3.67	21.92	25.59	50.00	-24.41	AVG	P
10	9.4963	15.23	21.93	37.16	60.00	-22.84	QP	P
11	13.5464	18.67	22.63	41.30	60.00	-18.70	QP	P
12	13.6723	5.41	22.65	28.06	50.00	-21.94	AVG	P

Notes:
1.An initial pre-scan was performed on the line and neutral lines with peak detector.
2.Quasi-Peak and Average measurement were performed at the frequencies with maximized peak emission.
3.Mesurement Level = Reading level + Correct Factor
4.The test data shows only the worst case -2402MHz.

Temperature :	26℃	Relative Humidity:	54%
Pressure :	101kPa	Phase :	N
Test Voltage :	AC 120V/60Hz	Test Mode :	TX -2402MHz

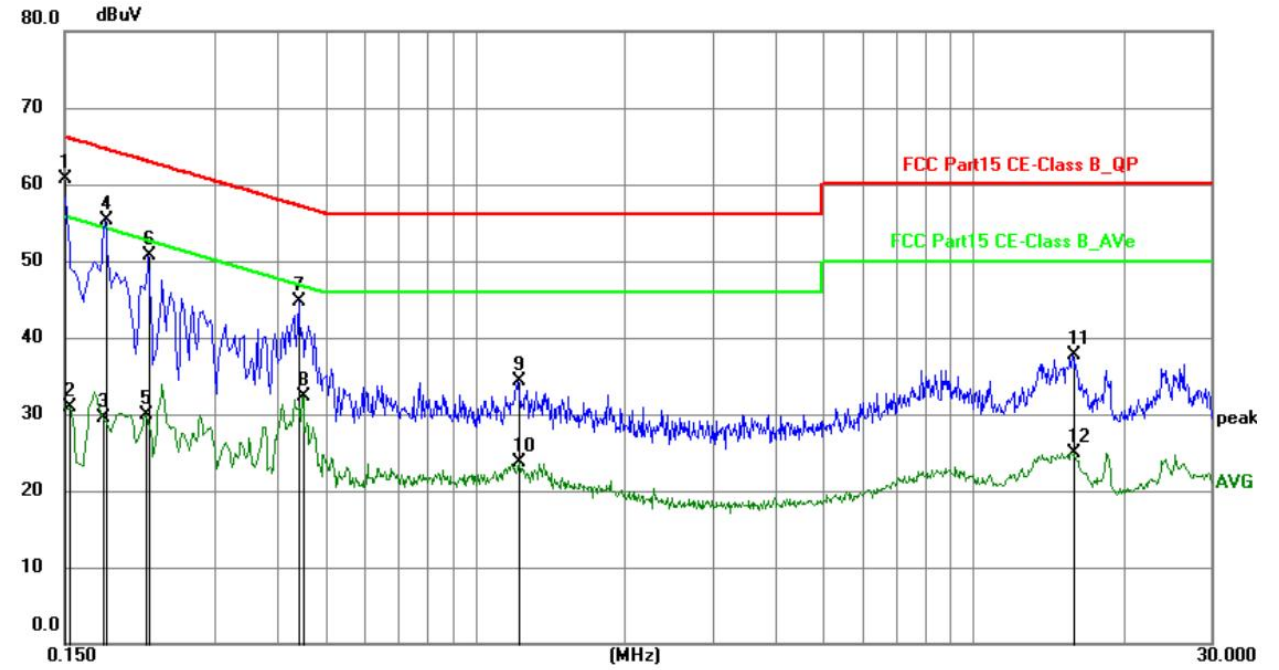

No.	Frequency (MHz)	Reading (dBuV)	Factor (dB)	Level (dBuV)	Limit (dBuV)	Margin (dB)	Detector	P/F
1	0.1500	39.85	20.84	60.69	66.00	-5.31	QP	P
2	0.1532	9.98	20.85	30.83	55.82	-24.99	AVG	P
3	0.1796	8.65	20.94	29.59	54.50	-24.91	AVG	P
4	0.1814	34.38	20.94	55.32	64.42	-9.10	QP	P
5	0.2174	8.90	21.00	29.90	52.92	-23.02	AVG	P
6	0.2220	29.66	20.99	50.65	62.74	-12.09	QP	P
7	0.4425	23.72	20.89	44.61	57.01	-12.40	QP	P
8	0.4515	11.49	20.88	32.37	46.85	-14.48	AVG	P
9	1.2209	13.39	20.94	34.33	56.00	-21.67	QP	P
10	1.2254	2.69	20.94	23.63	46.00	-22.37	AVG	P
11	15.8234	14.62	23.05	37.67	60.00	-22.33	QP	P
12	15.9090	1.82	23.07	24.89	50.00	-25.11	AVG	P

Notes:
1.An initial pre-scan was performed on the line and neutral lines with peak detector.
2.Quasi-Peak and Average measurement were performed at the frequencies with maximized peak emission.
3.Mesurement Level = Reading level + Correct Factor
4.The test data shows only the worst case -2402MHz.

4.2 RADIATED EMISSION MEASUREMENT

Test Requirement:	FCC Part15 C Section 15.209
Test Method:	ANSI C63.10:2013
Test Frequency Range:	9kHz to 25GHz
Test site:	Measurement Distance: 3m
Receiver setup:	

Frequency	Detector	RBW	VBW	Value
9KHz-150KHz	Quasi-peak	200Hz	600Hz	Quasi-peak
150KHz-30MHz	Quasi-peak	9KHz	30KHz	Quasi-peak
30MHz-1GHz	Quasi-peak	100KHz	300KHz	Quasi-peak
Above 1GHz	Peak	1MHz	3MHz	Peak
	Peak	1MHz	10Hz	Average

4.2.1 RADIATED EMISSION LIMITS

Frequencies (MHz)	Field Strength (micorvolts/meter)	Measurement Distance (meters)
0.009~0.490	2400/F(KHz)	300
0.490~1.705	24000/F(KHz)	30
1.705~30.0	30	30
30~88	100	3
88~216	150	3
216~960	200	3
Above 960	500	3

LIMITS OF RADIATED EMISSION MEASUREMENT

FREQUENCY (MHz)	Limit (dBuV/m) (at 3M)	
	PEAK	AVERAGE
Above 1000	74	54

Notes:

(1) The limit for radiated test was performed according to FCC PART 15C.

(2) The tighter limit applies at the band edges.

(3) Emission level (dBuV/m)=20log Emission level (uV/m).

4.2.2 TEST PROCEDURE

a. The measuring distance of at 3 m shall be used for measurements at frequency up to 25GHz. For frequencies above 1GHz, any suitable measuring distance may be used.
b. The EUT was placed on the top of a rotating table 0.8 meters above the ground at a 3 meter semi-chamber test. The table was rotated 360 degrees to determine the position of the highest radiation.
c. The height of the equipment or of the substitution antenna shall be 0.8m; above 1GHz, the height was 1.5m, the height of the test antenna shall vary between 1 m to 4 m. Both horizontal and vertical polarizations of the antenna are set to make the measurement.
d. The initial step in collecting conducted emission data is a spectrum analyzer peak detector mode pre-scanning the measurement frequency range. Significant peaks are then marked and then Quasi Peak detector mode re-measured.
e. If the Peak Mode measured value compliance with and lower than Quasi Peak Mode Limit, the EUT shall be deemed to meet QP Limits and then no additional QP Mode measurement performed.
f. For the actual test configuration, please refer to the related Item –EUT Test Photos.
g. For the radiated emission test above 1GHz:
Place the measurement antenna away from each area of the EUT determined to be a source of emissions at the specified measurement distance, while keeping the measurement antenna aimed at the source of emissions at each frequency of significant emissions, with polarization oriented for maximum response.
The measurement antenna may have to be higher or lower than the EUT, depending on the radiation pattern of the emission and staying aimed at the emission source for receiving the maximum signal. The final measurement antenna elevation shall be that which maximizes the emissions. The measurement antenna elevation for maximum emissions shall be restricted to a range of heights of from 1 m to 4 m above the ground or reference ground plane.
Note:
Both horizontal and vertical antenna polarities were tested
and performed pretest to three orthogonal axis. The worst case emissions were reported

4.2.3 DEVIATION FROM TEST STANDARD

No deviation

4.2.4 TEST SETUP

（A）Radiated Emission Test-Up Frequency Below 30MHz

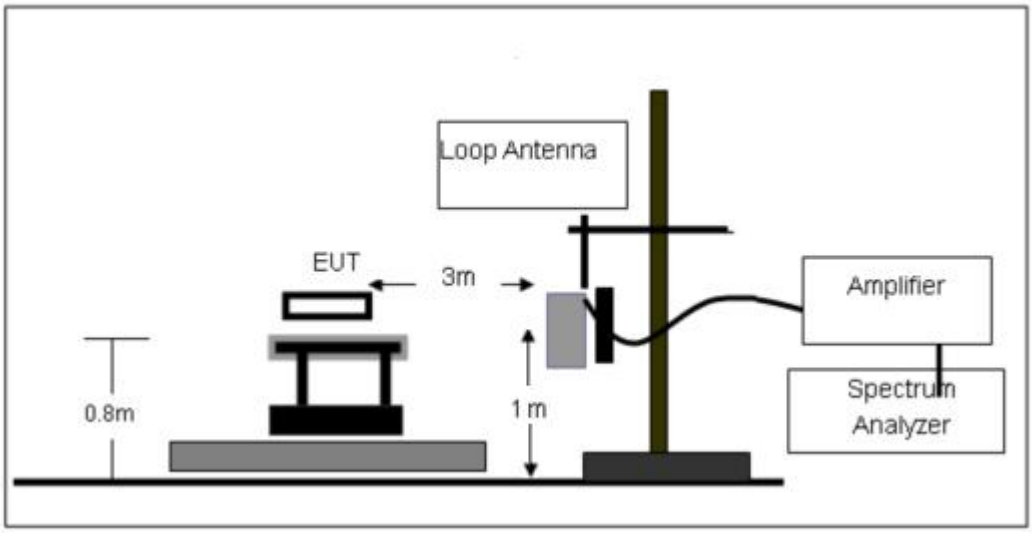

（B）Radiated Emission Test-Up Frequency 30MHz~1GHz

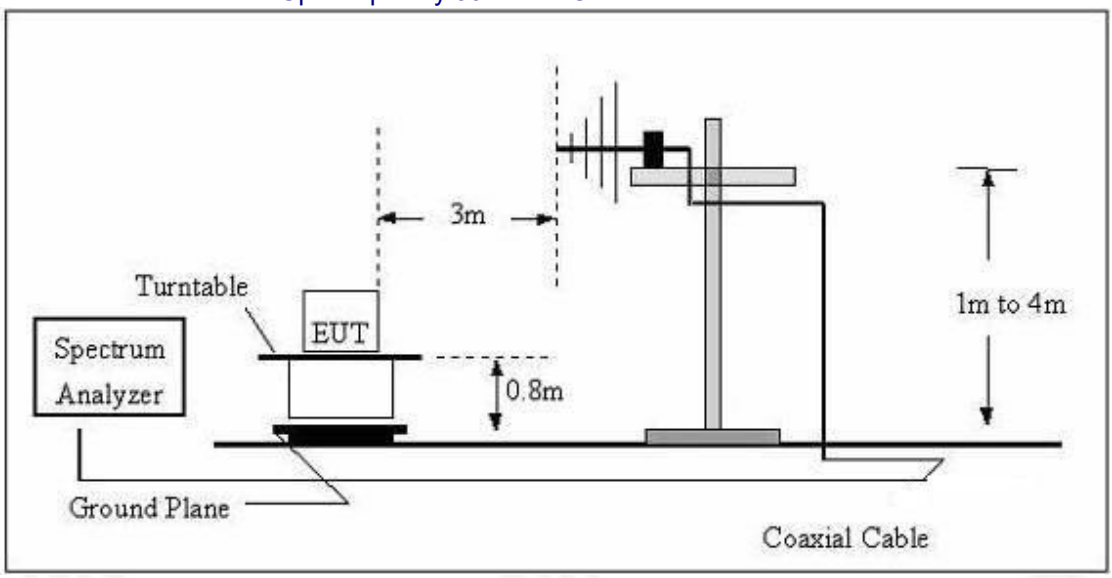

（C）Radiated Emission Test-Up Frequency Above 1GHz

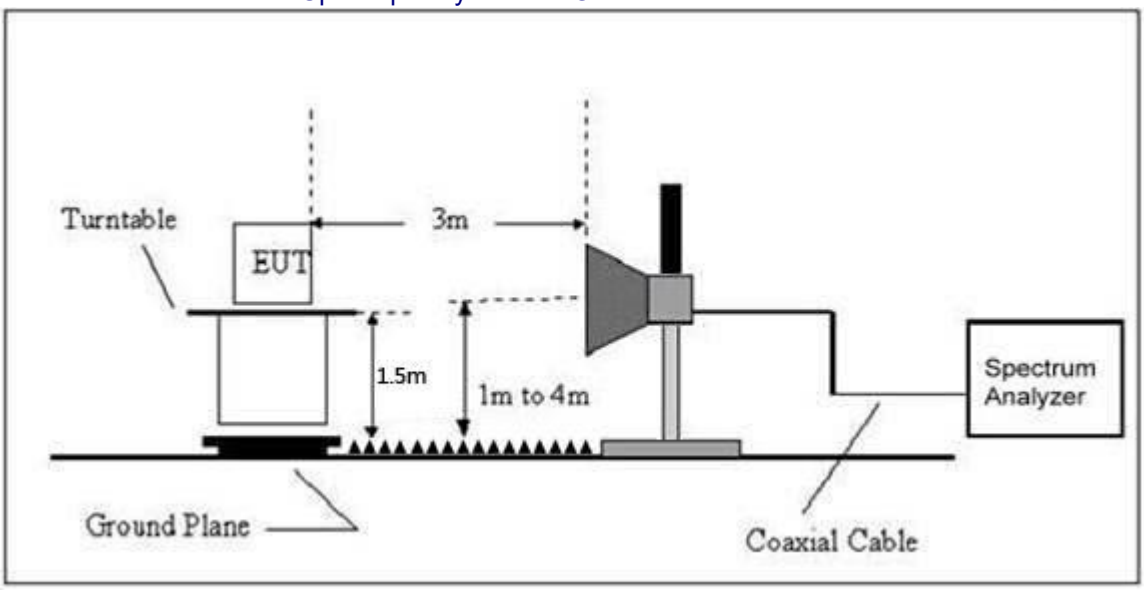

4.2.5 EUT OPERATING CONDITIONS

The EUT tested system was configured as the statements of 2.4 Unless otherwise a special operating condition is specified in the follows during the testing.

4.2.6 TEST RESULTS (Between 9KHz – 30 MHz)

The emission from 9 kHz to 30MHz was pre-tested and found the result was 20dB lower than the limit, and according to 15.31(o) & RSS-Gen 6.13, the test result no need to reported.

Between 30MHz – 1GHz

Temperature:	26℃	Relative Humidity:	54%
Pressure:	101 kPa	Polarization:	Vertical
Test Voltage:	AC 120V/60Hz		

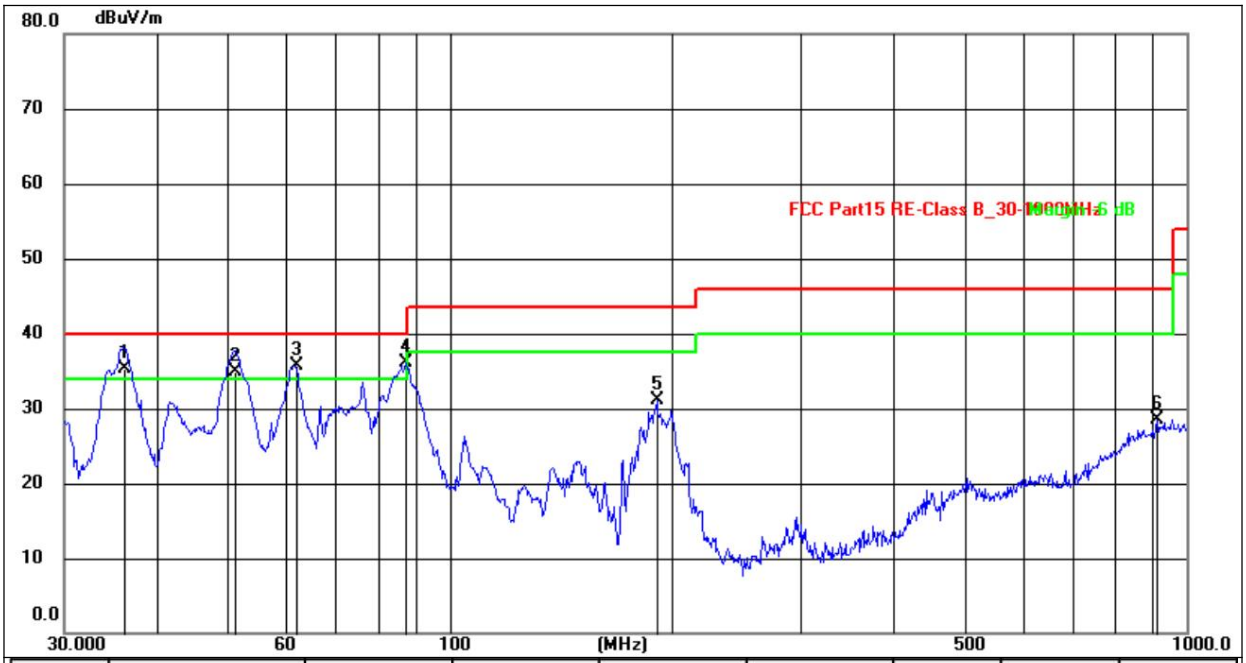

No.	Frequency (MHz)	Reading (dBuV)	Factor (dB/m)	Level (dBuV/m)	Limit (dBuV/m)	Margin (dB)	Detector	Height (cm)
1	36.1272	52.66	-17.43	35.23	40.00	-4.77	QP	
2	51.3005	52.42	-17.43	34.99	40.00	-5.01	QP	
3	61.7781	54.24	-18.51	35.73	40.00	-4.27	QP	
4	87.1117	57.62	-21.61	36.01	40.00	-3.99	QP	
5	191.0738	51.38	-20.31	31.07	43.50	-12.43	QP	
6	912.8620	29.22	-0.68	28.54	46.00	-17.46	QP	

Temperature:	26℃	Relative Humidity:	54%
Pressure:	101kPa	Polarization:	Horizontal
Test Voltage:	AC 120V/60Hz		

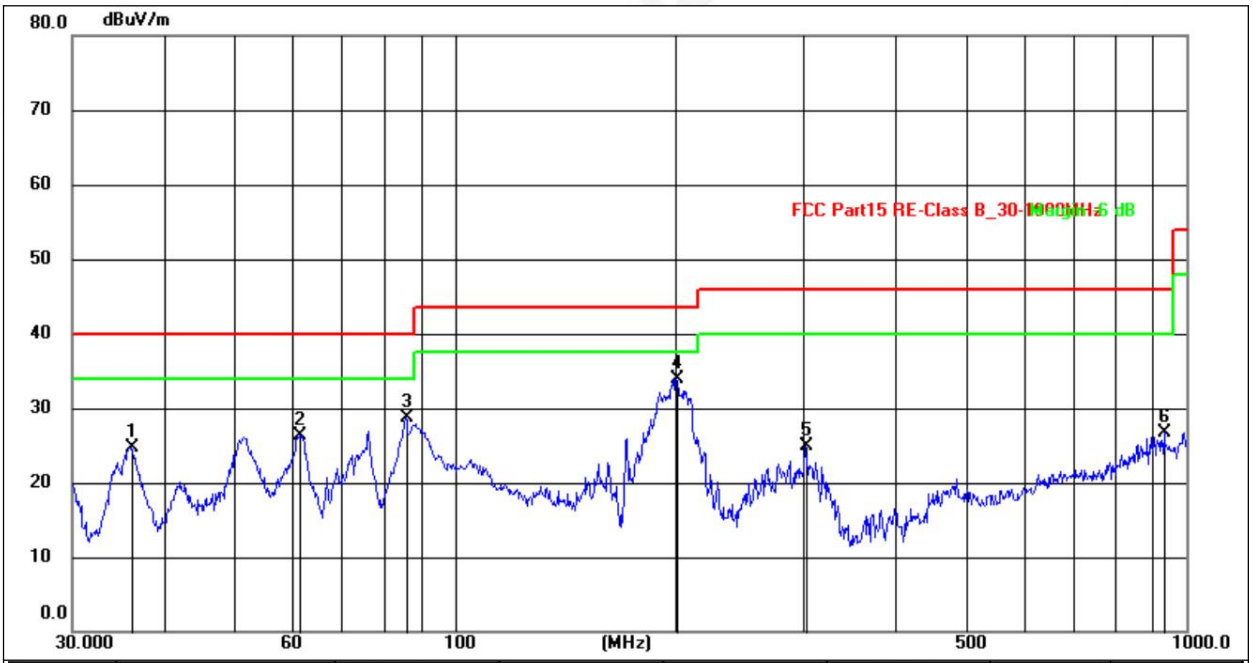

No.	Frequency (MHz)	Reading (dBuV)	Factor (dB/m)	Level (dBuV/m)	Limit (dBuV/m)	Margin (dB)	Detector
1	36.1272	39.56	-14.83	24.73	40.00	-15.27	QP
2	61.3463	40.99	-14.60	26.39	40.00	-13.61	QP
3	85.5977	48.53	-19.87	28.66	40.00	-11.34	QP
4	200.6881	52.70	-18.77	33.93	43.50	-9.57	QP
5	301.4224	41.88	-16.97	24.91	46.00	-21.09	QP
6	932.2715	33.05	-6.30	26.75	46.00	-19.25	QP

Notes:
1. The EUT was test at 3m in field chamber.
2. Final Level =Receiver Read level +Antenna Factor
3. The emission levels of other frequencies are very lower than the limit and not show in test report.

1GHz~25GHz

Polar (H/V)	Frequency (MHz)	Meter Reading (dBuV)	Pre-amplifier (dB)	Cable Loss (dB)	Antenna Factor (dB)	Emission Level (dBuV/m)	Limits (dBuV/m)	Margin (dB)	Detector Type
Low Channel:2402MHz									
V	4804.00	49.65	30.55	5.77	24.66	49.53	74.00	-24.47	Pk
V	4804.00	42.74	30.55	5.77	24.66	42.62	54.00	-11.38	AV
V	7206.00	52.64	30.33	6.32	24.55	53.18	74.00	-20.82	Pk
V	7206.00	42.29	30.33	6.32	24.55	42.83	54.00	-11.17	AV
V	9608.00	51.52	30.85	7.45	24.69	52.81	74.00	-21.19	Pk
V	9608.00	42.17	30.85	7.45	24.69	43.46	54.00	-10.54	AV
V	12010.00	50.8	31.02	8.99	25.57	54.34	74.00	-19.66	Pk
V	12010.00	42.61	31.02	8.99	25.57	46.15	54.00	-7.85	AV
H	4804.00	50.35	30.55	5.77	24.66	50.23	74.00	-23.77	Pk
H	4804.00	42.73	30.55	5.77	24.66	42.61	54.00	-11.39	AV
H	7206.00	53.43	30.33	6.32	24.55	53.97	74.00	-20.03	Pk
H	7206.00	43.09	30.33	6.32	24.55	43.63	54.00	-10.37	AV
H	9608.00	51.2	30.85	7.45	24.69	52.49	74.00	-21.51	Pk
H	9608.00	43.06	30.85	7.45	24.69	44.35	54.00	-9.65	AV
H	12010.00	52.05	31.02	8.99	25.57	55.59	74.00	-18.41	Pk
H	12010.00	42.43	31.02	8.99	25.57	45.97	54.00	-8.03	AV

Polar (H/V)	Frequency (MHz)	Meter Reading (dBuV)	Pre-amplifier (dB)	Cable Loss (dB)	Antenna Factor (dB)	Emission Level (dBuV/m)	Limits (dBuV/m)	Margin (dB)	Detector Type
Middle Channel:2440MHz									
V	4880.00	52.17	30.55	5.77	24.66	52.05	74.00	-21.95	Pk
V	4880.00	42.14	30.55	5.77	24.66	42.02	54.00	-11.98	AV
V	7320.00	50.71	30.33	6.32	24.55	51.25	74.00	-22.75	Pk
V	7320.00	42.85	30.33	6.32	24.55	43.39	54.00	-10.61	AV
V	9760.00	53.69	30.85	7.45	24.69	54.98	74.00	-19.02	Pk
V	9760.00	42.64	30.85	7.45	24.69	43.93	54.00	-10.07	AV
V	12200.00	50.63	31.02	8.99	25.57	54.17	74.00	-19.83	Pk
V	12200.00	42.4	31.02	8.99	25.57	45.94	54.00	-8.06	AV
H	4880.00	49.98	30.55	5.77	24.66	49.86	74.00	-24.14	Pk
H	4880.00	42.15	30.55	5.77	24.66	42.03	54.00	-11.97	AV
H	7320.00	49.18	30.33	6.32	24.55	49.72	74.00	-24.28	Pk
H	7320.00	42.79	30.33	6.32	24.55	43.33	54.00	-10.67	AV
H	9760.00	51.82	30.85	7.45	24.69	53.11	74.00	-20.89	Pk
H	9760.00	43.09	30.85	7.45	24.69	44.38	54.00	-9.62	AV
H	12200.00	49.14	31.02	8.99	25.57	52.68	74.00	-21.32	Pk
H	12200.00	42.46	31.02	8.99	25.57	46.00	54.00	-8.00	AV

Polar (H/V)	Frequency (MHz)	Meter Reading (dBuV)	Pre-amplifier (dB)	Cable Loss (dB)	Antenna Factor (dB)	Emission Level (dBuV/m)	Limits (dBuV/m)	Margin (dB)	Detector Type
High Channel:2480MHz									
V	4960.00	51.06	30.55	5.77	24.66	50.94	74.00	-23.06	Pk
V	4960.00	43.07	30.55	5.77	24.66	42.95	54.00	-11.05	AV
V	7440.00	52.03	30.33	6.32	24.55	52.57	74.00	-21.43	Pk
V	7440.00	42.6	30.33	6.32	24.55	43.14	54.00	-10.86	AV
V	9920.00	53.57	30.85	7.45	24.69	54.86	74.00	-19.14	Pk
V	9920.00	42.48	30.85	7.45	24.69	43.77	54.00	-10.23	AV
V	12400.00	49.35	31.02	8.99	25.57	52.89	74.00	-21.11	Pk
V	12400.00	42.64	31.02	8.99	25.57	46.18	54.00	-7.82	AV
H	4960.00	52.76	30.55	5.77	24.66	52.64	74.00	-21.36	Pk
H	4960.00	42.17	30.55	5.77	24.66	42.05	54.00	-11.95	AV
H	7440.00	51.46	30.33	6.32	24.55	52.00	74.00	-22.00	Pk
H	7440.00	42.57	30.33	6.32	24.55	43.11	54.00	-10.89	AV
H	9920.00	52.8	30.85	7.45	24.69	54.09	74.00	-19.91	Pk
H	9920.00	42.96	30.85	7.45	24.69	44.25	54.00	-9.75	AV
H	12400.00	52.37	31.02	8.99	25.57	55.91	74.00	-18.09	Pk
H	12400.00	43.1	31.02	8.99	25.57	46.64	54.00	-7.36	AV

Remark:
1. Emission Level = Meter Reading + Antenna Factor + Cable Loss – Pre-amplifier,
   Margin= Emission Level - Limit
2. If peak below the average limit, the average emission was no test.
3. The amplitude of spurious emissions which are attenuated by more than 20dB below the permissible value has no need to be reported.

5.RADIATED BAND EMISSION MEASUREMENT

5.1 TEST REQUIREMENT:

Test Requirement:	FCC Part15 C Section 15.209 and 15.205
Test Method:	ANSI C63.10: 2013
Test Frequency Range:	All of the restrict bands were tested, only the worst band's (2310MHz to 2500MHz) data was showed.
Test site:	Measurement Distance: 3m
Receiver setup:	

Frequency	Detector	RBW	VBW	Value
Above 1GHz	Peak	1MHz	3MHz	Peak
	Average	1MHz	3MHz	Average

LIMITS OF RADIATED EMISSION MEASUREMENT (Above 1000MHz)

FREQUENCY (MHz)	Limit (dBuV/m) (at 3M)	
	PEAK	AVERAGE
Above 1000	74	54

Notes:

(1) The limit for radiated test was performed according to FCC PART 15C.

(2) The tighter limit applies at the band edges.

(3) Emission level (dBuV/m)=20log Emission level (uV/m).

5.2 TEST PROCEDURE

Above 1GHz test procedure as below:

a. 1. The EUT was placed on the top of a rotating table 1.5 meters above the ground at a 3 meter camber. The table was rotated 360 degrees to determine the position of the highest radiation.

b. The EUT was set 3 meters away from the interference-receiving antenna, which was mounted on the top of a variable-height antenna tower.

c. The antenna height is varied from one meter to four meters above the ground to determine the maximum value of the field strength. Both horizontal and vertical polarizations of the antenna are set to make the measurement.

d. For each suspected emission, the EUT was arranged to its worst case and then the antenna was tuned to heights from 1 meter to 4 meters and the rota table was turned from 0 degrees to 360 degrees to find the maximum reading.

e. The test-receiver system was set to Peak Detect Function and Specified Bandwidth with Maximum Hold Mode.

f. If the emission level of the EUT in peak mode was 10dB lower than the limit specified, then testing could be stopped and the peak values of the EUT would be reported. Otherwise the emissions that did not have 10dB margin would be re-tested one by one using peak, quasi-peak or average method as specified and then reported in a data sheet.

g. Test the EUT in the lowest channel,the Highest channel

Note:

Both horizontal and vertical antenna polarities were tested
and performed pretest to three orthogonal axis. The worst case emissions were reported

5.3 DEVIATION FROM TEST STANDARD

No deviation

5.4 TEST SETUP

Radiated Emission Test-Up Frequency Above 1GHz

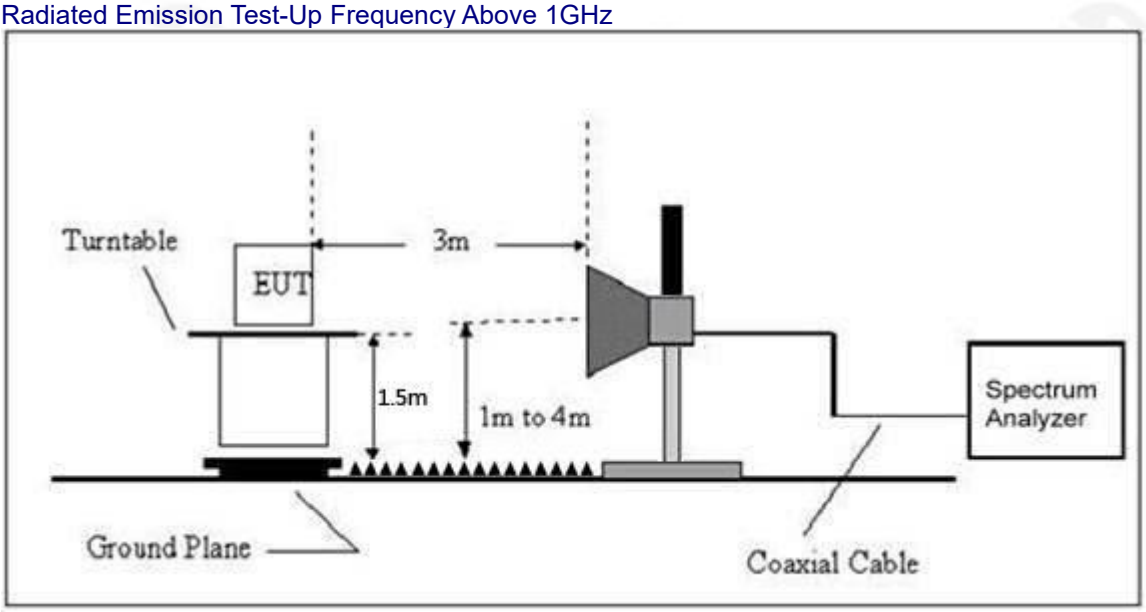

5.5 EUT OPERATING CONDITIONS

The EUT tested system was configured as the statements of 2.3 Unless otherwise a special operating condition is specified in the follows during the testing.

5.6 TEST RESULT

	Polar (H/V)	Frequency (MHz)	Meter Reading (dBuV)	Pre-amplifier (dB)	Cable Loss (dB)	Antenna Factor (dB/m)	Emission level (dBuV/m)	Limit (dBuV/m)	Detector Type	Result
GFSK	Low Channel: 2402MHz									
	H	2390.00	54.24	30.55	5.77	24.66	54.12	74.00	PK	PASS
	H	2390.00	43.21	30.55	5.77	24.66	43.09	54.00	AV	PASS
	H	2400.00	51.39	30.33	6.32	24.55	51.93	74.00	PK	PASS
	H	2400.00	43.05	30.33	6.32	24.55	43.59	54.00	AV	PASS
	V	2390.00	52.25	30.85	7.45	24.69	53.54	74.00	PK	PASS
	V	2390.00	43.11	30.85	7.45	24.69	44.4	54.00	AV	PASS
	V	2400.00	51.43	31.02	8.99	25.57	54.97	74.00	PK	PASS
	V	2400.00	42.78	31.02	8.99	25.57	46.32	54.00	AV	PASS
	High Channel: 2480MHz									
	H	2483.50	53.93	30.22	4.85	23.98	52.54	74.00	PK	PASS
	H	2483.50	44.38	30.22	4.85	23.98	42.99	54.00	AV	PASS
	H	2500.00	53.26	30.22	4.85	23.98	51.87	74.00	PK	PASS
	H	2500.00	43.79	30.22	4.85	23.98	42.4	54.00	AV	PASS
	V	2483.50	53.97	30.22	4.85	23.98	52.58	74.00	PK	PASS
	V	2483.50	44.41	30.22	4.85	23.98	43.02	54.00	AV	PASS
	V	2500.00	53.48	30.22	4.85	23.98	52.09	74.00	PK	PASS
	V	2500.00	43.67	30.22	4.85	23.98	42.28	54.00	AV	PASS

Remark:
1. Emission Level = Meter Reading + Antenna Factor + Cable Loss – Pre-amplifier, Margin= Emission Level - Limit

6.POWER SPECTRAL DENSITY TEST

Test Requirement:	FCC Part15 C Section 15.247 (e)
Test Method:	KDB558074 D0115.247 Meas Guidance v05r02

6.1 APPLIED PROCEDURES / LIMIT

FCC Part15 (15.247) , Subpart C				
Section	Test Item	Limit	Frequency Range (MHz)	Result
15.247	Power Spectral Density	8dBm/3kHz	2400-2483.5	PASS

6.2 TEST PROCEDURE

1. Set analyzer center frequency to DTS channel center frequency.
2. Set the span to 1.5 times the DTS bandwidth.
3. Set the RBW to: 3 kHz ≤ RBW ≤ 100 kHz.
4. Set the VBW ≥ 3 x RBW.
5. Detector = peak.
6. Sweep time = auto couple.
7. Trace mode = max hold.
8. Allow trace to fully stabilize.
9. Use the peak marker function to determine the maximum amplitude level within the RBW.
10. If measured value exceeds limit, reduce RBW (no less than 3 kHz) and repeat.

6.3 DEVIATION FROM STANDARD

No deviation.

6.4 TEST SETUP

6.5 EUT OPERATION CONDITIONS

The EUT tested system was configured as the statements of 2.1 Unless otherwise a special operating condition is specified in the follows during the testing.

6.6 TEST RESULT

Measurement Data : The detailed test data see Appendix Ⅱ

7. -6 DB BANDWIDTH

Test Requirement:	FCC Part15 C Section 15.247 (a)(2)
Test Method:	KDB558074 D0115.247 Meas Guidance v05r02

7.1 APPLIED PROCEDURES / LIMIT

FCC Part15 (15.247) , Subpart C				
Section	Test Item	Limit	Frequency Range (MHz)	Result
15.247(a)(2)	Bandwidth	>= 500KHz (6dB bandwidth)	2400-2483.5	PASS

7.2 TEST PROCEDURE

1. Set RBW = 100 kHz.
2. Set the video bandwidth (VBW) ≥ 3 x RBW.
3. Detector = Peak.
4. Trace mode = max hold.
5. Sweep = auto couple.
6. Allow the trace to stabilize.
7. Measure the maximum width of the emission that is constrained by the frequencies associated with the two outermost amplitude points (upper and lower frequencies) that are attenuated by 6 dB relative to the maximum level measured in the fundamental emission.

7.3 DEVIATION FROM STANDARD

No deviation.

7.4 TEST SETUP

7.5 EUT OPERATION CONDITIONS

The EUT tested system was configured as the statements of 2.4 Unless otherwise a special operating condition is specified in the follows during the testing.

7.6 TEST RESULT

Measurement Data : The detailed test data see Appendix Ⅱ

8.PEAK OUTPUT POWER TEST

Test Requirement:	FCC Part15 C Section 15.247 (b)(3)
Test Method:	KDB558074 D0115.247 Meas Guidance v05r02

8.1 APPLIED PROCEDURES / LIMIT

FCC Part15 (15.247) , Subpart C				
Section	Test Item	Limit	Frequency Range (MHz)	Result
15.247(b)(3)	Peak Output Power	1 watt or 30dBm	2400-2483.5	PASS

8.2 TEST PROCEDURE

a. The EUT was directly connected to the Power meter

8.3 DEVIATION FROM STANDARD

No deviation.

8.4 TEST SETUP

8.5 EUT OPERATION CONDITIONS

The EUT tested system was configured as the statements of 2.4 Unless otherwise a special operating condition is specified in the follows during the testing.

8.6 TEST RESULT

Measurement Data : The detailed test data see Appendix Ⅱ

9. CONDUCTED BAND EDGE AND SPURIOUS EMISSION

Test Requirement:	FCC Part15 C Section 15.247 (d)
Test Method:	KDB558074 D0115.247 Meas Guidance v05r02

9.1 APPLICABLE STANDARD

In any 100 kHz bandwidth outside the frequency band in which the spread spectrum intentional radiator is operating, the radio frequency power that is produced by the intentional radiator shall be at least 20 dB below that in the 100 kHz bandwidth within the band that contains the highest level of the desired power, based on either an RF conducted or a radiated measurement.

9.2 TEST PROCEDURE

Using the following spectrum analyzer setting:

A) Set the RBW = 100KHz.
B) Set the VBW = 300KHz.
C) Sweep time = auto couple.
D) Detector function = peak.
E) Trace mode = max hold.
F) Allow trace to fully stabilize.

9.3 DEVIATION FROM STANDARD

No deviation.

9.4 TEST SETUP

9.5 EUT OPERATION CONDITIONS

The EUT tested system was configured as the statements of 2.4 Unless otherwise a special operating condition is specified in the follows during the testing.

9.6 TEST RESULTS

Measurement Data : The detailed test data see Appendix Ⅱ

10.ANTENNA REQUIREMENT

Standard requirement:	FCC Part15 C Section 15.203 /247(c)
15.203 requirement: An intentional radiator shall be designed to ensure that no antenna other than that furnished by the responsible party shall be used with the device. The use of a permanently attached antenna or of an antenna that uses a unique coupling to the intentional radiator, the manufacturer may design the unit so that a broken antenna can be replaced by the user, but the use of a standard antenna jack or electrical connector is prohibited. 15.247(c) (1)(i) requirement: (i) Systems operating in the 2400-2483.5 MHz band that is used exclusively for fixed. Point-to-point operations may employ transmitting antennas with directional gain greater than 6dBi provided the maximum conducted output power of the intentional radiator is reduced by 1 dB for every 3 dB that the directional gain of the antenna exceeds 6dBi.	
EUT Antenna:	
The antenna is FPC ANT, the best case gain of the antennas is 2.78 dBi, reference to the Appendix -EUT PHOTO Internal Photos for details	

11. TEST SETUP PHOTO

Reference to the appendix **Test Setup Photo** for details.

12. EUT CONSTRUCTIONAL DETAILS

Reference to the appendix External Photos & Internal Photos for details.

※※※※※ END OF REPORT ※※※※※