TEST REPORT
FCC ID:2BKLS-HN962

Report Number.....:	**ZKT-240822L10327E-4**
Date of Test.....	July.20,2024-Aug.25,2024
Date of issue.....:	Aug.28,2024
Total number of pages.....	40
Test Result .....:	PASS
Testing Laboratory.....:	**Shenzhen ZKT Technology Co., Ltd.**
Address .....:	1/F, No. 101, Building B, No. 6, Tangwei Community Industrial Avenue, Fuhai Street, Bao'an District, Shenzhen, China
Applicant's name .....:	**Xuzhou Huiniao Technology Consulting Services Co., Ltd**
Address .....:	4F, Building A8, Xuzhou National Security Science and Technology Industrial Park,Xuzhou City,China
Manufacturer's name .....:	**Xuzhou Huiniao Technology Consulting Services Co., Ltd**
Address .....:	4F, Building A8, Xuzhou National Security Science and Technology Industrial Park,Xuzhou City,China
Test specification:	
Standard.....:	FCC CFR Title 47 Part 15 Subpart C Section 15.407 ANSI C63.10:2013 KDB 789033 D02 v01r02
Test procedure.....:	/
Non-standard test method .....:	N/A
Test Report Form No.....:	TRF-EL-113_V0
Test Report Form(s) Originator.....:	ZKT Testing
Master TRF .....:	Dated: 2020-01-06

This device described above has been tested by ZKT, and the test results show that the equipment under test (EUT) is in compliance with the FCC requirements. And it is applicable only to the tested sample identified in the report.
This report shall not be reproduced except in full, without the written approval of ZKT, this document may be altered or revised by ZKT, personal only, and shall be noted in the revision of the document.

Product name.....:	**Smart display**
Trademark .....:	N/A
Model/Type reference.....:	HN-962
Ratings.....:	DC 12V by adapter

Testing procedure and testing location:

Testing Laboratory.....:	Shenzhen ZKT Technology Co., Ltd.
Address.....:	1/F, No. 101, Building B, No. 6, Tangwei Community Industrial Avenue, Fuhai Street, Bao'an District, Shenzhen, China
Tested by (name + signature).....:	Jim Liu
Reviewer (name + signature).....:	Jackson Fang
Approved (name + signature).....:	Lake Xie

Table of Contents **Page**

1. VERSION 5
2.SUMMARY OF TEST RESULTS 6
2.1 TEST FACILITY 6
2.2 MEASUREMENT UNCERTAINTY 7
3. GENERAL INFORMATION 8
3.1 GENERAL DESCRIPTION OF EUT 8
3.3 BLOCK DIGRAM SHOWING THE CONFIGURATION OF SYSTEM TESTED 11
3.4 DESCRIPTION OF SUPPORT UNITS(CONDUCTED MODE) 11
3.5 EQUIPMENTS LIST FOR ALL TEST ITEMS 12
4.EMC EMISSION TEST 14
4.1 CONDUCTED EMISSION MEASUREMENT 14
4.1.1 POWER LINE CONDUCTED EMISSION Limits 14
4.1.2 TEST PROCEDURE 14
4.1.3 DEVIATION FROM TEST STANDARD 14
4.1.4 TEST SETUP 15
4.1.5 EUT OPERATING CONDITIONS 15
4.2 RADIATED EMISSION MEASUREMENT 18
4.2.1 APPLICABLE STANDARD 18
4.2.2 CONFORMANCE LIMIT 18
4.2.3 MEASURING INSTRUMENTS 18
4.2.4 TEST CONFIGURATION 19
4.2.5 TEST PROCEDURE 20
4.2.6 TEST RESULT 21
5.1 APPLIED PROCEDURES / LIMIT 26
5.2 TEST PROCEDURE 27
5.3 DEVIATION FROM STANDARD 27
5.4 TEST SETUP 27
5.5 EUT OPERATION CONDITIONS 27
5.6 TEST RESULTS 28
6. -6 DB & 99% EMISSION BANDWIDTH 29
6.1 APPLIED PROCEDURES / LIMIT 29
6.2 TEST PROCEDURE 29
6.3 EUT OPERATION CONDITIONS 30
6.4 TEST RESULTS 30
7. CONDUCTED AVERAGE OUTPUT POWER 31
7.1 PPLIED PROCEDURES / LIMIT 31
7.2 TEST PROCEDURE 31

Table of Contents **Page**

7.3 DEVIATION FROM STANDARD 32
7.4 TEST SETUP 32
7.5 EUT OPERATION CONDITIONS 32
7.6 TEST RESULTS 32

8.OUT OF BAND EMISSIONS 33
8.1 APPLICABLE STANDARD 33
8.2 TEST PROCEDURE 33
8.3 DEVIATION FROM STANDARD 33
8.4 TEST SETUP 33
8.5 EUT OPERATION CONDITIONS 34
8.6 TEST RESULTS 34

9.Frequency Stability Measurement 36
9.1 LIMIT 36
9.2 TEST PROCEDURES 36
9.3 TEST SETUP LAYOUT 36
9.4 EUT OPERATION DURING TEST 36
9.5 TEST RESULTS 36

10.ANTENNA REQUIREMENT 37

11. TEST SETUP PHOTO 38

12. EUT CONSTRUCTIONAL DETAILS 38

1. VERSION

Report No.	Version	Description	Approved
ZKT-240822L10327E-4	Rev.01	Initial issue of report	Aug.28,2024

2.SUMMARY OF TEST RESULTS

Test procedures according to the technical standards:

FCC Part15 (15.407) , Subpart E			
Standard Section	Test Item	Judgment	Remark
FCC part 15.207	AC Power Line Conducted Emissions	PASS	
15.209(a), 15.407 (b)	Spurious Radiated Emissions	PASS	
15.207	Conducted Emission	PASS	
15.407(a)	99% Emission Bandwidth & 6 dB bandwidth	PASS	
15.407 (a)(1) 15.407 (a)(3)	Conducted Average Output Power	PASS	
15.407 (a)(1) 15.407 (a)(3)	Power Spectral Density	PASS	
15.407(g)	Frequency Stability	PASS	
15.203	Antenna Requirement	PASS	

NOTE:

(1)" N/A" denotes test is not applicable in this Test Report

2.1 TEST FACILITY

Shenzhen ZKT Technology Co., Ltd.
Add. : 1/F, No. 101, Building B, No. 6, Tangwei Community Industrial Avenue, Fuhai Street, Bao'an District, Shenzhen, China

FCC Test Firm Registration Number: 692225
Designation Number: CN1299
IC Registered No.: 27033
CAB identifier: CN0110

2.2 MEASUREMENT UNCERTAINTY

The reported uncertainty of measurement y ± U，where expended uncertainty U is based on a standard uncertainty multiplied by a coverage factor of k=2，providing a level of confidence of approximately 95 %。

No.	Item	Uncertainty
1	3m camber Radiated spurious emission(9KHz-30MHz)	U=4.5dB
2	3m camber Radiated spurious emission(30MHz-1GHz)	U=4.8dB
3	3m chamber Radiated spurious emission(1GHz-6GHz)	U=4.9dB
4	3m chamber Radiated spurious emission(6GHz-40GHz)	U=5.0dB
5	Conducted disturbance	U=3.2dB
6	RF Band Edge	U=1.68dB
7	RF power conducted	U=1.8-6dB
8	RF conducted Spurious Emission	U=2.2dB
9	RF Occupied Bandwidth	U=1.8dB
10	RF Power Spectral Density	U=1.75dB
11	humidity uncertainty	U=5.3%
12	Temperature uncertainty	U=0.59℃

3. GENERAL INFORMATION

3.1 GENERAL DESCRIPTION OF EUT

Product Name:	Smart display	
Model No.:	HN-962	
Hardware Version:	V2	
Software Version:	V1.0	
Test sample(s) ID:	ZKT-240822L10327	
Sample(s) Status:	Engineer sample	
Product Description	IEEE 802.11 WLAN Mode Supported	☒ 802.11a/ac/n (20MHz channel bandwidth) ☒ 802.11ac/n (40MHz channel bandwidth) ☐ 802.11ac(80MHz channel bandwidth)
	Data Rate	802.11a(6M~54M) 802.11/ac/n(HT20/HT40):MCS0-MCS15;
	Modulation	OFDM with BPSK/QPSK/16QAM/64QAM/256QAM for 802.11a/n/ac;
	Operating Frequency Range	☐ 5180-5240MHz for 802.11a/ac/n(HT20); 5190-5230MHz for 802.11ac/n(HT40); 5210MHz for 802.11 ac80; ☒ 5745-5825 MHz for 802.11a/ac/n(HT20); 5755-5795 MHz for 802.11ac/n(HT40);
	Number of Channels	☐ 4 channels for 802.11a/ac/n20 in the 5180-5240MHz band ; 2 channels for 802.11 ac/n40 in the 5190-5230 MHz band ; 1 channels for 802.11 ac80 in the 5210MHz band ; ☒ 5 channels for 802.11a/ac/n20 in the 5745-5825MHz band ; 2 channels for 802.11 ac/n40 in the 5755-5795 MHz band ;
Channel List	Please refer to the Note 2.	
Antenna Type:	FPC antenna	
Antenna gain:	4.86 dBi	
Power supply:	DC 12V by adapter	

Note:

For a more detailed features description, please refer to the manufacturer's specifications or the User's Manual.

802.11a/ac/n(20 MHz) Frequency Channel							
Channel	Frequency (MHz)	Channel	Frequency (MHz)	Channel	Frequency (MHz)	Channel	Frequency (MHz)
149	5745	153	5765	157	5785	161	5805
165	5825	-	-	-	-	-	-

802.11ac/n(40MHz) Frequency Channel					
Channel	Frequency (MHz)	Channel	Frequency (MHz)	Channel	Frequency (MHz)
151	5755	159	5795	-	-

3.2 DESCRIPTION OF TEST MODES

Transmitting mode	Keep the EUT in continuously transmitting mode
Remark: During the test, the duty cycle >98%, the test voltage was tuned from 85% to 115% of the nominal rated supply voltage, and found that the worst case was under the nominal rated supply condition. So the report just shows that condition's data.	

Pretest Mode	Description
Mode 1	802.11a/ac /n 20 CH149/ CH157/ CH 165
Mode 2	802.11ac / n 40 CH 151 / CH 159
Mode 3	Working mode

Conducted Emission	
Final Test Mode	Description
Mode 1	802.11a/ac /n 20 CH149/ CH157/ CH 165
Mode 2	802.11ac / n 40 CH 151 / CH 159
Mode 3	Working mode

For Radiated Emission	
Final Test Mode	Description
Mode 1	802.11a/ac /n 20 CH149/ CH157/ CH 165
Mode 2	802.11ac / n 40 CH 151 / CH 159
Mode 3	Working mode

Note:

(1) The measurements are performed at all Bit Rate of Transmitter, the worst data was reported.

3.3 BLOCK DIGRAM SHOWING THE CONFIGURATION OF SYSTEM TESTED

Conducted Emission

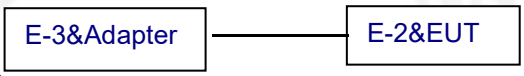

Radiated Emission

Conducted Spurious

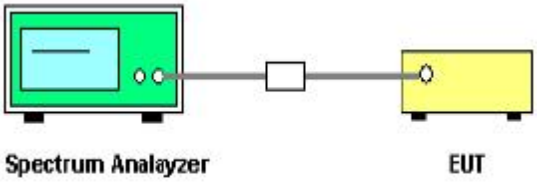

3.4 DESCRIPTION OF SUPPORT UNITS(CONDUCTED MODE)

The EUT has been tested as an independent unit together with other necessary accessories or support units. The following support units or accessories were used to form a representative test configuration during the tests.

Item	Equipment	Mfr/Brand	Model/Type No.	Series No.	Note
E-1	Smart display	Autel Robotics	HN-962	N/A	EUT
E-2	Power adapter	N/A	N/A	N/A	AE

Item	Shielded Type	Ferrite Core	Length	Note

Note:

(1) The support equipment was authorized by Declaration of Confirmation.
(2) For detachable type I/O cable should be specified the length in cm in 『Length』 column.

3.5 EQUIPMENTS LIST FOR ALL TEST ITEMS

Radiation emissions& Radio Test equipment

Item	Equipment	Manufacturer	Type No.	Serial No.	Firmware Version	Last calibration	Calibrated until
1	Spectrum Analyzer (9kHz-26.5GHz)	KEYSIGHT	9020A	MY55370835	A.17.05	Nov. 02, 2023	Nov. 01, 2024
2	Spectrum Analyzer (10kHz-39.9GHz)	R&S	FSV40-N	100363	1.71 SP2	Nov. 02, 2023	Nov. 01, 2024
3	EMI Test Receiver (9kHz-7GHz)	R&S	ESCI7	100969	4.32	Nov. 02, 2023	Nov. 01, 2024
4	Bilog Antenna (30MHz-1500MHz)	Schwarzbeck	VULB9168	N/A	N/A	Nov. 13, 2023	Nov. 12, 2024
5	Horn Antenna (1GHz-18GHz)	Agilent	AH-118	071145	N/A	Nov. 13, 2023	Nov. 12, 2024
6	Horn Antenna (15GHz-40GHz)	A.H.System	SAS-574	588	N/A	Nov. 13, 2023	Nov. 12, 2024
7	Loop Antenna	TESEQ	HLA6121	58357	N/A	Nov. 16, 2023	Nov. 15, 2024
8	Amplifier (30-1000MHz)	EM Electronics	EM330 Amplifier	60747	N/A	Nov. 02, 2023	Nov. 01, 2024
9	Amplifier (1GHz-26.5GHz)	HuiPu	8449B	3008A00315	N/A	Nov. 02, 2023	Nov. 01, 2024
10	Amplifier (500MHz-40GHz)	QuanJuDa	DLE-161	097	N/A	Nov. 02, 2023	Nov. 01, 2024
11	Test Cable	N/A	R-01	N/A	N/A	Nov. 02, 2023	Nov. 01, 2024
12	Test Cable	N/A	R-02	N/A	N/A	Nov. 02, 2023	Nov. 01, 2024
13	Test Cable	N/A	R-03	N/A	N/A	Nov. 02, 2023	Nov. 01, 2024
14	Test Cable	N/A	RF-01	N/A	N/A	Nov. 02, 2023	Nov. 01, 2024
15	Test Cable	N/A	RF-02	N/A	N/A	Nov. 02, 2023	Nov. 01, 2024
16	Test Cable	N/A	RF-03	N/A	N/A	Nov. 02, 2023	Nov. 01, 2024
17	ESG Signal Generator	Agilent	E4421B	N/A	B.03.84	Nov. 02, 2023	Nov. 01, 2024
18	Signal Generator	Agilent	N5182A	N/A	A.01.87	Nov. 02, 2023	Nov. 01, 2024
19	Magnetic Field Probe Tester	Narda	ELT-400	0-0344	N/A	Nov. 16, 2023	Nov. 15, 2024
20	Wideband Radio Communication Test	R&S	CMW500	106504	V 3.7.22	Nov. 02, 2023	Nov. 01, 2024
21	MWRF Power Meter Test system	MW	MW100-RF CB	N/A	N/A	Nov. 02, 2023	Nov. 01, 2024
22	D.C. Power Supply	LongWei	TPR-6405D	N/A	N/A	\	\
23	EMC Software	Frad	EZ-EMC	Ver.EMC-CO N 3A1.1	N/A	\	\
24	RF Software	MW	MTS8310	V2.0.0.0	N/A	\	\
25	Turntable	MF	MF-7802BS	N/A	N/A	\	\
26	Antenna tower	MF	MF-7802BS	N/A	N/A	\	\

Conduction Test equipment

Item	Kind of Equipment	Manufacturer	Type No.	Serial No.	Firmware Version	Last calibration	Calibrated until
1	LISN	R&S	ENV216	101471	N/A	Nov. 14, 2023	Nov. 13, 2024
2	LISN	CYBERTEK	EM5040A	E1850400149	N/A	Nov. 02, 2023	Nov. 01, 2024
3	Test Cable	N/A	C-01	N/A	N/A	Nov. 02, 2023	Nov. 01, 2024
4	Test Cable	N/A	C-02	N/A	N/A	Nov. 02, 2023	Nov. 01, 2024
5	Test Cable	N/A	C-03	N/A	N/A	Nov. 02, 2023	Nov. 01, 2024
6	EMI Test Receiver	R&S	ESCI3	101393	4.42 SP3	Nov. 02, 2023	Nov. 01, 2024
7	Triple-Loop Antenna	N/A	RF300	N/A	N/A	Nov. 02, 2023	Nov. 01, 2024
8	Absorbing Clamp	DZ	ZN23201	15034	N/A	Nov. 07, 2023	Nov. 06, 2024
9	EMC Software	Frad	EZ-EMC	Ver.EMC-CON 3A1.1	N/A	\	\

4.EMC EMISSION TEST

4.1 CONDUCTED EMISSION MEASUREMENT

Test Requirement:	FCC Part15 C Section 15.207
Test Method:	ANSI C63.10:2013
Test Frequency Range:	150KHz to 30MHz
Receiver setup:	RBW=9KHz, VBW=30KHz, Sweep time=auto

4.1.1 POWER LINE CONDUCTED EMISSION Limits

FREQUENCY (MHz)	Limit (dBuV)		Standard
	Quasi-peak	Average	
0.15 -0.5	66 - 56 *	56 - 46 *	FCC
0.50 -5.0	56.00	46.00	FCC
5.0 -30.0	60.00	50.00	FCC

Note:

(1) *Decreases with the logarithm of the frequency.

4.1.2 TEST PROCEDURE

a. The EUT was placed 0.8 meters from the horizontal ground plane with EUT being connected to the power mains through a line impedance stabilization network (LISN). All other support equipments powered from additional LISN(s). The LISN provide 50 Ohm/ 50uH of coupling impedance for the measuring instrument.

b. Interconnecting cables that hang closer than 40 cm to the ground plane shall be folded back and forth in the center forming a bundle 30 to 40 cm long.

c. I/O cables that are not connected to a peripheral shall be bundled in the center. The end of the cable may be terminated, if required, using the correct terminating impedance. The overall length shall not exceed 1 m.

d. LISN at least 80 cm from nearest part of EUT chassis.

e. For the actual test configuration, please refer to the related Item –EUT Test Photos.

4.1.3 DEVIATION FROM TEST STANDARD

No deviation

4.1.4 TEST SETUP

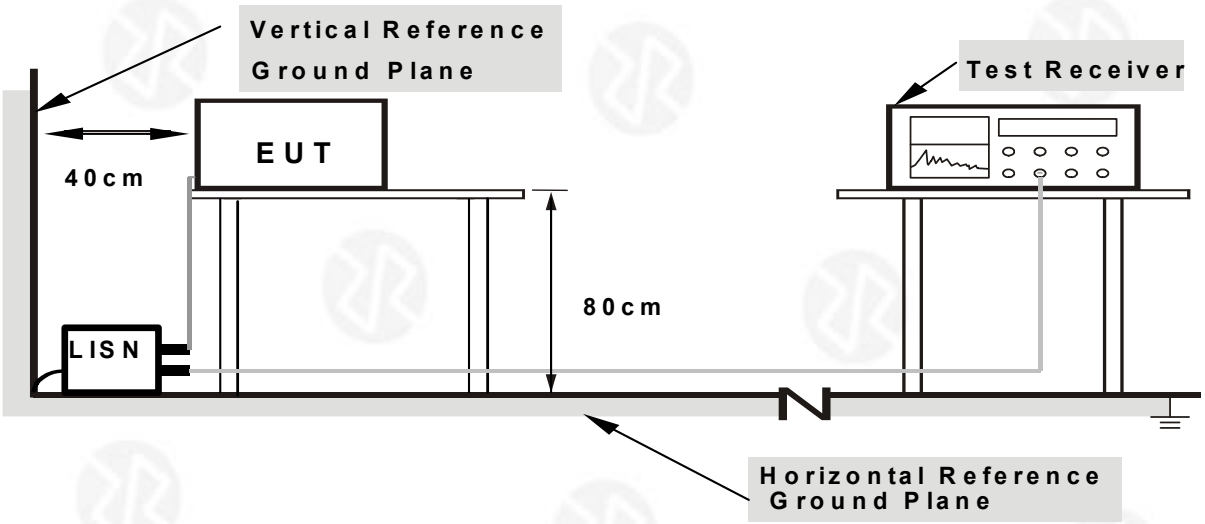

Note: 1.Support units were connected to second LISN.
2.Both of LISNs (AMN) are 80 cm from EUT and at least 80 from other units and other metal planes

4.1.5 EUT OPERATING CONDITIONS

The EUT was configured for testing in a typical fashion (as a customer would normally use it). The EUT has been programmed to continuously transmit during test. This operating condition was tested and used to collect the included data.

We pretest AC 120V and AC 230V, the worst voltage was AC 120V and the data recording in the report.

4.1.6 TEST RESULT

Temperature:	26℃	Relative Humidity:	54%
Pressure:	101kPa	Phase :	L
Test Voltage :	AC 120V/60Hz		

Report:Note: Pre-scan all modes and recorded the worst case results in this report which is 802.11a mode.

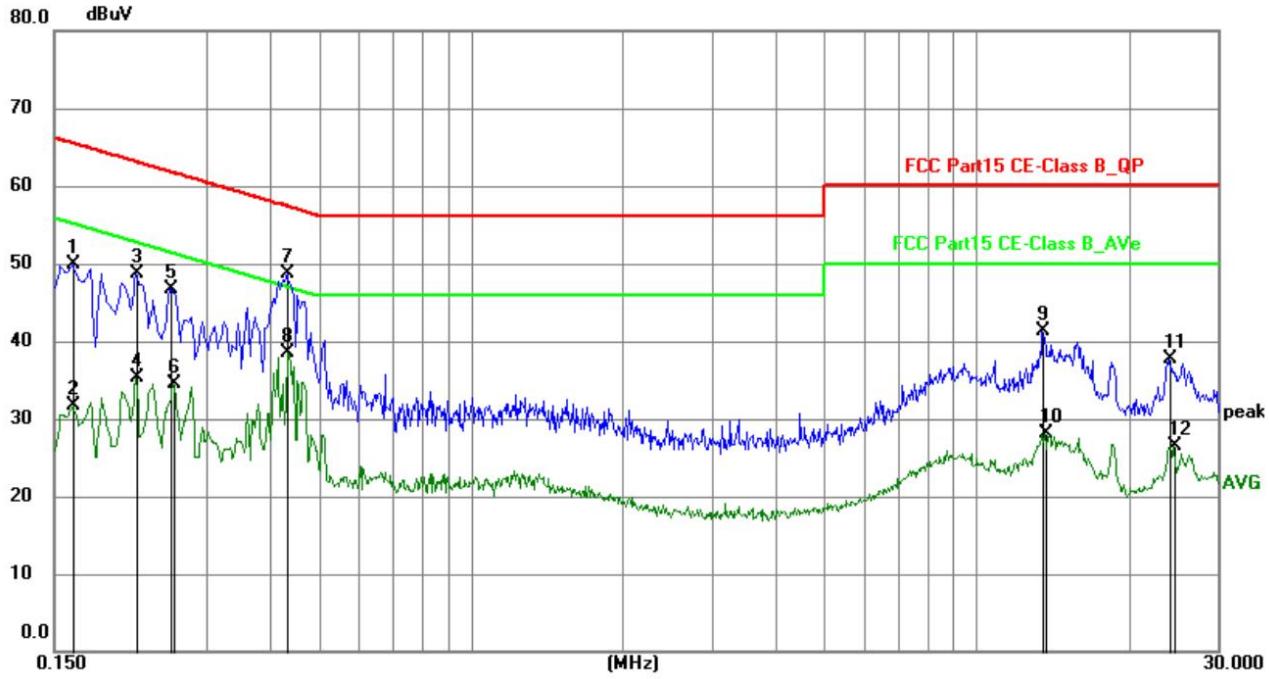

No.	Frequency (MHz)	Reading (dBuV)	Factor (dB)	Level (dBuV)	Limit (dBuV)	Margin (dB)	Detector	P/F
1	0.1635	28.97	20.91	49.88	65.28	-15.40	QP	P
2	0.1635	10.81	20.91	31.72	55.28	-23.56	AVG	P
3	0.2175	27.58	21.03	48.61	62.91	-14.30	QP	P
4	0.2175	14.30	21.03	35.33	52.91	-17.58	AVG	P
5	0.2535	25.79	21.01	46.80	61.64	-14.84	QP	P
6	0.2580	13.45	21.01	34.46	51.50	-17.04	AVG	P
7	0.4335	27.77	20.92	48.69	57.19	-8.50	QP	P
8	0.4335	17.52	20.92	38.44	47.19	-8.75	AVG	P
9	13.5465	18.67	22.63	41.30	60.00	-18.70	QP	P
10	13.6725	5.41	22.65	28.06	50.00	-21.94	AVG	P
11	24.0900	13.27	24.37	37.64	60.00	-22.36	QP	P
12	24.5760	1.97	24.44	26.41	50.00	-23.59	AVG	P

Notes:

1.An initial pre-scan was performed on the line and neutral lines with peak detector.

2.Quasi-Peak and Average measurement were performed at the frequencies with maximized peak emission.

3.Mesurement Level = Reading level + Correct Factor

Temperature:	26℃	Relative Humidity:	54%
Pressure:	101kPa	Phase :	N
Test Voltage :	AC 120V/60Hz		

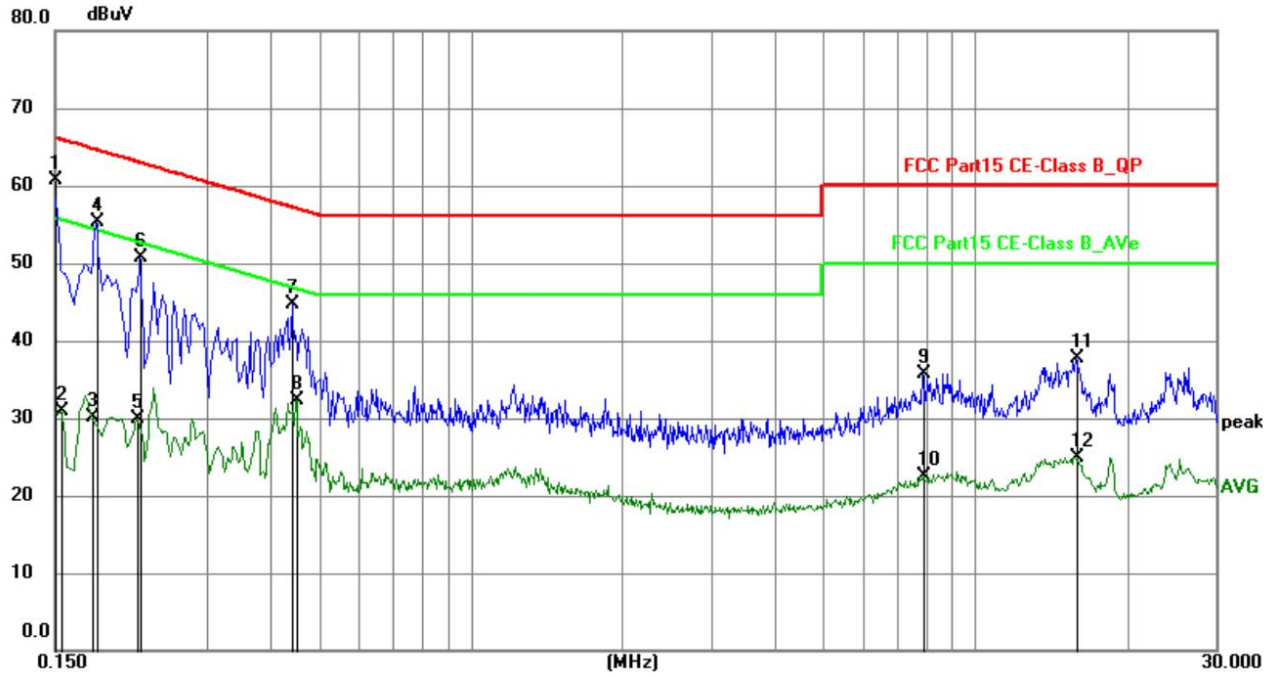

No.	Frequency (MHz)	Reading (dBuV)	Factor (dB)	Level (dBuV)	Limit (dBuV)	Margin (dB)	Detector	P/F
1	0.1500	39.85	20.84	60.69	66.00	-5.31	QP	P
2	0.1545	10.03	20.86	30.89	55.75	-24.86	AVG	P
3	0.1777	9.21	20.93	30.14	54.59	-24.45	AVG	P
4	0.1815	34.38	20.94	55.32	64.42	-9.10	QP	P
5	0.2175	8.90	21.00	29.90	52.91	-23.01	AVG	P
6	0.2220	29.66	20.99	50.65	62.74	-12.09	QP	P
7	0.4425	23.72	20.89	44.61	57.01	-12.40	QP	P
8	0.4515	11.49	20.88	32.37	46.85	-14.48	AVG	P
9	7.8720	14.08	21.70	35.78	60.00	-24.22	QP	P
10	7.9125	0.87	21.71	22.58	50.00	-27.42	AVG	P
11	15.8235	14.62	23.05	37.67	60.00	-22.33	QP	P
12	15.9090	1.82	23.07	24.89	50.00	-25.11	AVG	P

Notes:
1.An initial pre-scan was performed on the line and neutral lines with peak detector.
2.Quasi-Peak and Average measurement were performed at the frequencies with maximized peak emission.
3.Mesurement Level = Reading level + Correct Factor

4.2 RADIATED EMISSION MEASUREMENT

4.2.1 APPLICABLE STANDARD

According to FCC Part 15.407(d) and 15.209

4.2.2 CONFORMANCE LIMIT

According to FCC Part 15.407(b)(7): radiated emissions which fall in the restricted bands, as defined in §15.205(a), must also comply with the radiated emission limits specified in §15.209(a) (see §15.205(c)).
According to FCC Part15.205, Restricted bands

MHz	MHz	MHz	GHz
0.090-0.110	16.42-16.423	399.9-410	4.5-5.15
10.495-0.505	16.69475-16.69525	608-614	5.35-5.46
2.1735-2.1905	16.80425-16.80475	960-1240	7.25-7.75
4.125-4.128	25.5-25.67	1300-1427	8.025-8.5
4.17725-4.17775	37.5-38.25	1435-1626.5	9.0-9.2
4.20725-4.20775	73-74.6	1645.5-1646.5	9.3-9.5
6.215-6.218	74.8-75.2	1660-1710	10.6-12.7
6.26775-6.26825	123-138	2200-2300	14.47-14.5
8.291-8.294	149.9-150.05	2310-2390	15.35-16.2
8.362-8.366	156.52475-156.52525	2483.5-2500	17.7-21.4
8.37625-8.38675	156.7-156.9	2690-2900	22.01-23.12
8.41425-8.41475	162.0125-167.17	3260-3267	23.6-24.0
12.29-12.293	167.72-173.2	3332-3339	31.2-31.8
12.51975-12.52025	240-285	3345.8-3358	36.43-36.5
12.57675-12.57725	322-335.4	3600-4400	(2)
13.36-13.41			

20dBc in any 100 kHz bandwidth outside the operating frequency band. In case the emission fall within the restricted band specified on 15.205(a), then the 15.209(a) limit in the table below has to be followed.

Restricted Frequency(MHz)	Field Strength (μV/m)	Field Strength (dBμV/m)	Measurement Distance
0.009~0.490	2400/F(KHz)	20 log (uV/m)	300
0.490~1.705	2400/F(KHz)	20 log (uV/m)	30
1.705~30.0	30	29.5	30
30-88	100	40	3
88-216	150	43.5	3
216-960	200	46	3
Above 960	500	54	3

Limits of Radiated Emission Measurement(Above 1000MHz)

Frequency(MHz)	Class B (dBuV/m) (at 3M)	
	PEAK	AVERAGE
Above 1000	74	54

Remark :1. Emission level in dBuV/m=20 log (uV/m)
2. Measurement was performed at an antenna to the closed point of EUT distance of meters.
3. Distance extrapolation factor =40log(Specific distance/ test distance)(dB);
Limit line=Specific limits(dBuV) + distance extrapolation factor.

4.2.3 MEASURING INSTRUMENTS

The Measuring equipment is listed in the section 6.3 of this test report.

4.2.4 TEST CONFIGURATION

1.For radiated emissions below 30MHz

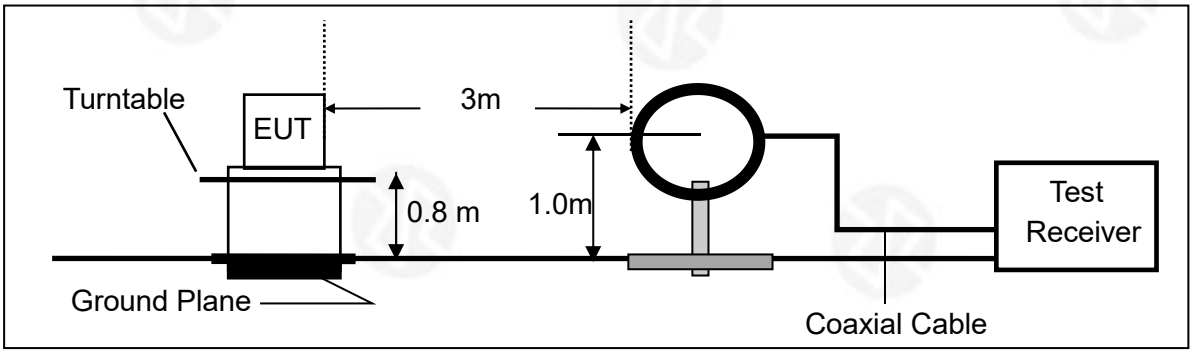

2.For radiated emissions from 30MHz to 1000MHz

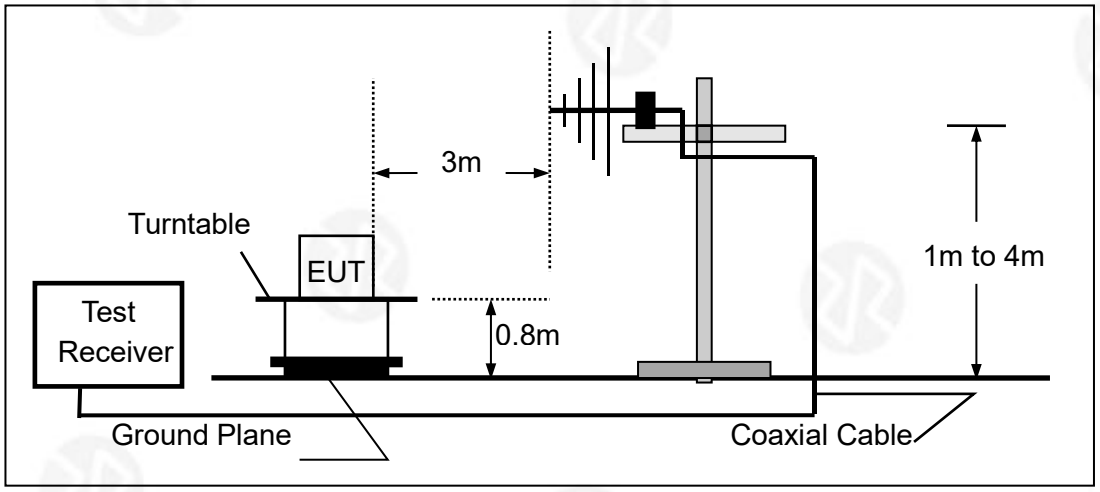

3. Radiated Emission Test-Up Frequency Above 1GHz

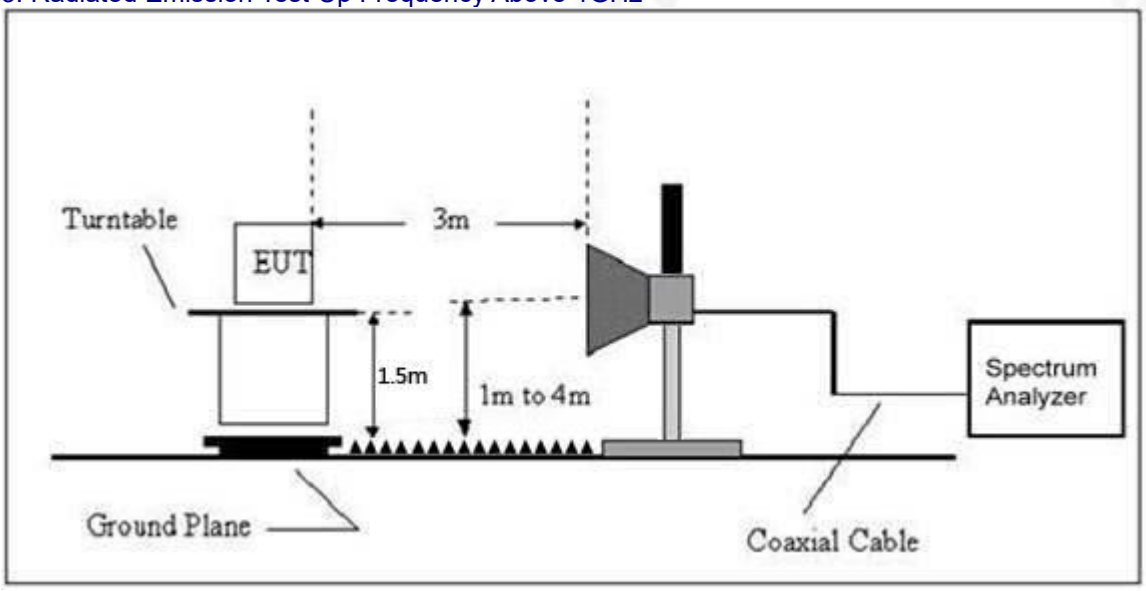

4.2.5 TEST PROCEDURE

The test site semi-anechoic chamber has met the requirement of NSA tolerance 4 dB according to the standards: ANSI C63.10-2013. The test distance is 3m.The setup is according to the requirements in Section 13.1.4.1 of ANSI C63.10-2013 and CAN/CSA-CEI/IEC CISPR 22.
This test is required for any spurious emission that falls in a Restricted Band, as defined in Section 15.205. It must be performed with the highest gain of each type of antenna proposed for use with the EUT.
Use the following spectrum analyzer settings:

Spectrum Parameter	Setting
Attenuation	Auto
Start Frequency	1000 MHz
Stop Frequency	10th carrier harmonic
RB / VB (emission in restricted band)	1 MHz / 1 MHz for Peak, 1 MHz / 10Hz for Average

Receiver Parameter	Setting
Attenuation	Auto
Start ~ Stop Frequency	9kHz~150kHz / RB 200Hz for QP
Start ~ Stop Frequency	150kHz~30MHz / RB 9kHz for QP
Start ~ Stop Frequency	30MHz~1000MHz / RB 120kHz for QP

a. The measuring distance of at 3 m shall be used for measurements at frequency up to 1GHz. For frequencies above 1GHz, any suitable measuring distance may be used.
b. The EUT was placed on the top of a rotating table 0.8 m for below 1GHz and 1.5m for above 1GHz the ground at a 3 meter. The table was rotated 360 degrees to determine the position of the highest radiation.
c. The height of the equipment or of the substitution antenna shall be 0.8 m for below 1GHz and 1.5m for above 1GHz; the height of the test antenna shall vary between 1 m to 4 m. Both horizontal and vertical polarizations of the antenna are set to make the measurement.
d. The initial step in collecting conducted emission data is a spectrum analyzer peak detector mode pre-scanning the measurement frequency range. Significant peaks are then marked and then Quasi Peak detector mode re-measured.
e. If the Peak Mode measured value compliance with and lower than Quasi Peak Mode Limit, the EUT shall be deemed to meet QP Limits and then no additional QP Mode measurement performed.
f. For the actual test configuration, please refer to the related Item –EUT Test Photos.

Note:

Both horizontal and vertical antenna polarities were tested
and performed pretest to three orthogonal axis. The worst case emissions were reported

During the radiated emission test, the Spectrum Analyzer was set with the following configurations:

Frequency Band (MHz)	Function	Resolution bandwidth	Video Bandwidth
30 to 1000	QP	120 kHz	300 kHz
Above 1000	Peak	1 MHz	1 MHz
	Average	1 MHz	10 Hz

Note: for the frequency ranges below 30 MHz, a narrower RBW is used for these ranges but the measured value should add a RBW correction factor (RBWCF) where RBWCF [dB] =10*lg(100 [kHz]/narrower RBW [kHz]). , the narrower RBW is 1 kHz and RBWCF is 20 dB for the frequency 9 kHz to 150 kHz, and the narrower RBW is 10 kHz and RBWCF is 10 dB for the frequency 150 kHz to 30 MHz.

4.2.6 TEST RESULT

Between 9KHz – 30MHz

The emission from 9 kHz to 30MHz was pre-tested and found the result was 20dB lower than the limit, and according to 15.31(o) & RSS-Gen 6.13, the test result no need to reported.

Between 30MHz – 1GHz

Temperature:	26℃	Relative Humidity:	54%
Pressure:	101 kPa	Polarization:	Horizontal
Test Voltage:	AC 120V/60Hz		

Note: Pre-scan all modes and recorded the worst case results in this report which is 802.11a mode

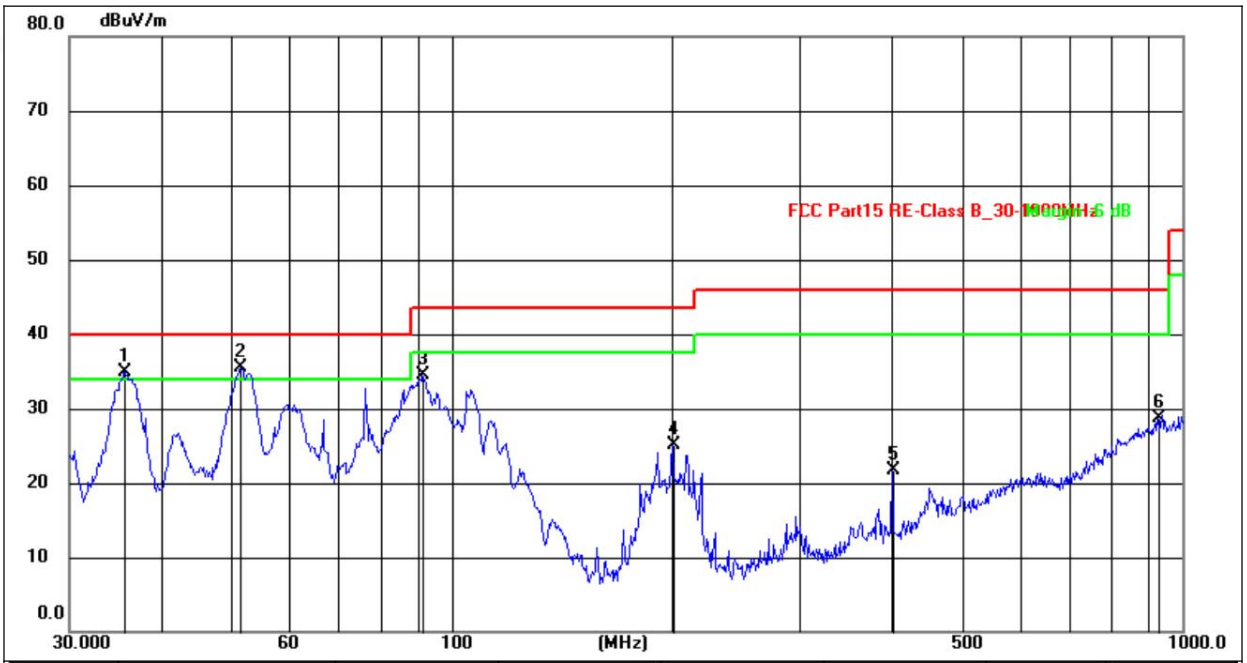

No.	Frequency (MHz)	Reading (dBuV)	Factor (dB/m)	Level (dBuV/m)	Limit (dBuV/m)	Margin (dB)	Detector
1	35.6240	52.51	-17.51	35.00	40.00	-5.00	QP
2	51.4807	52.92	-17.44	35.48	40.00	-4.52	QP
3	91.1746	55.97	-21.46	34.51	43.50	-8.99	QP
4	200.6881	45.74	-20.69	25.05	43.50	-18.45	QP
5	400.4319	36.64	-15.02	21.62	46.00	-24.38	QP
6	925.7563	29.34	-0.60	28.74	46.00	-17.26	QP

Temperature:	26℃	Relative Humidity:	54%
Pressure:	101kPa	Polarization:	Vertical
Test Voltage:	AC 120V/60Hz		

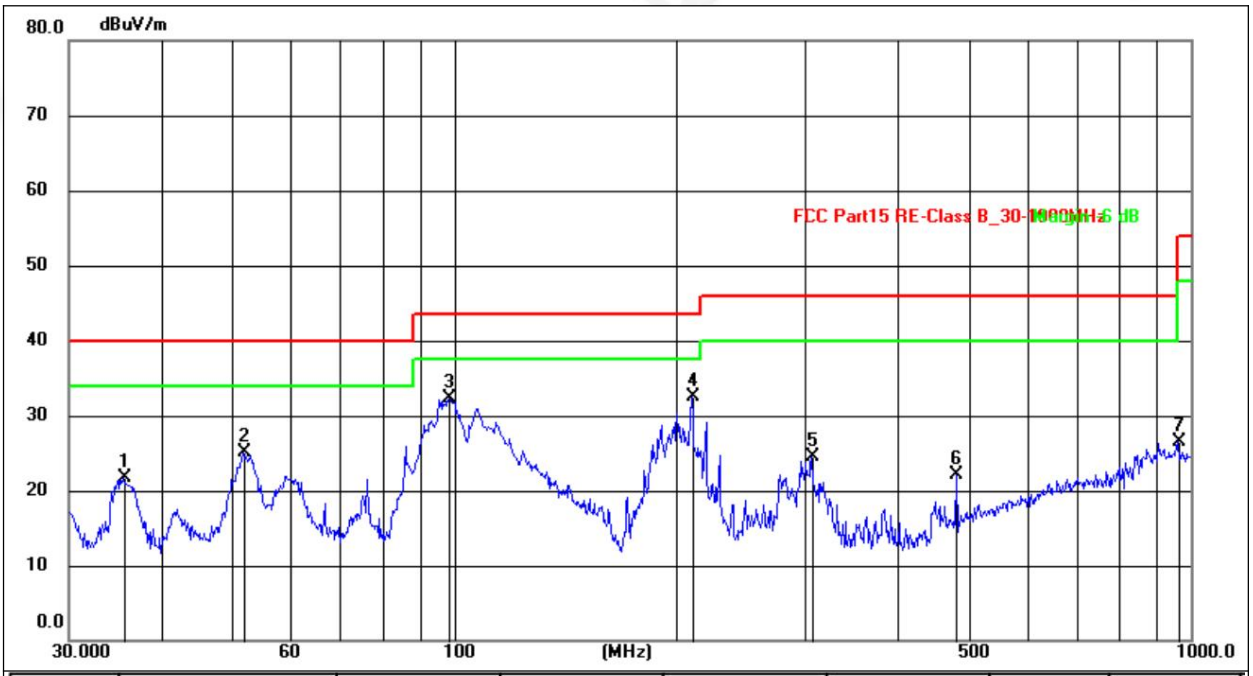

No.	Frequency (MHz)	Reading (dBuV)	Factor (dB/m)	Level (dBuV/m)	Limit (dBuV/m)	Margin (dB)	Detector
1	35.6240	36.70	-14.93	21.77	40.00	-18.23	QP
2	51.6616	39.11	-14.07	25.04	40.00	-14.96	QP
3	98.4866	52.15	-19.88	32.27	43.50	-11.23	QP
4	210.0482	50.75	-18.29	32.46	43.50	-11.04	QP
5	305.6800	41.48	-16.96	24.52	46.00	-21.48	QP
6	480.5276	34.62	-12.58	22.04	46.00	-23.96	QP
7	962.1623	32.18	-5.67	26.51	54.00	-27.49	QP

Remarks:
1.Final Level =Receiver Read level + Antenna Factor + Cable Loss – Preamplifier Factor
2.The emission levels of other frequencies are very lower than the limit and not show in test report.
3.The test data shows only the worst case 802.11a mode

Between 1GHz – 40GHz

Temperature :	26℃	Relative Humidity :	54%
Pressure :	1010 hPa	Test Voltage :	AC 120V/60Hz
Test Mode :	5.8G TX- 802.11a		

Note: Pre-scan all modes and recorded the worst case results in this report which is 802.11a mode

802.11a20

Polar (H/V)	Frequency (MHz)	Meter Reading (dBuV)	Pre-amplifier (dB)	Cable Loss (dB)	Antenna Factor (dB)	Emission Level (dBuV/m)	Limits (dBuV/m)	Margin (dB)	Detector Type
Low Channel:5745MHz									
V	11490.00	51.70	30.55	5.77	24.66	51.58	68.20	-16.62	PK
V	11490.00	40.61	30.55	5.77	24.66	40.49	54.00	-13.51	AV
V	17235.00	50.72	30.33	6.32	24.55	51.26	68.20	-16.94	PK
V	17235.00	47.99	30.33	6.32	24.55	48.53	54.00	-5.47	AV
H	11490.00	48.05	30.55	5.77	24.66	47.93	68.20	-20.27	PK
H	11490.00	38.92	30.55	5.77	24.66	38.80	54.00	-15.20	AV
H	17235.00	48.18	30.33	6.32	24.55	48.72	68.20	-19.48	PK
H	17235.00	40.01	30.33	6.32	24.55	40.55	54.00	-13.45	AV

Polar (H/V)	Frequency (MHz)	Meter Reading (dBuV)	Pre-amplifier (dB)	Cable Loss (dB)	Antenna Factor (dB)	Emission Level (dBuV/m)	Limits (dBuV/m)	Margin (dB)	Detector Type
Middle Channel:5785MHz									
V	11570.00	49.60	30.55	5.77	24.66	49.48	68.20	-18.72	PK
V	11570.00	39.12	30.55	5.77	24.66	39.00	54.00	-15.00	AV
V	17353.30	49.31	30.33	6.32	24.55	49.85	68.20	-18.35	PK
V	17353.30	40.03	30.33	6.32	24.55	40.57	54.00	-13.43	AV
H	11570.00	48.88	30.55	5.77	24.66	48.76	68.20	-19.44	PK
H	11570.00	40.82	30.55	5.77	24.66	40.70	54.00	-13.30	AV
H	17353.30	47.88	30.33	6.32	24.55	48.42	68.20	-19.78	PK
H	17353.30	39.82	30.33	6.32	24.55	40.36	54.00	-13.64	AV

Polar (H/V)	Frequency (MHz)	Meter Reading (dBuV)	Pre-amplifier (dB)	Cable Loss (dB)	Antenna Factor (dB)	Emission Level (dBuV/m)	Limits (dBuV/m)	Margin (dB)	Detector Type
High Channel:5825MHz									
V	11650.00	48.56	30.55	5.77	24.66	48.44	68.20	-19.76	PK
V	11650.00	38.08	30.55	5.77	24.66	37.96	54.00	-16.04	AV
V	17473.30	48.27	30.33	6.32	24.55	48.81	68.20	-19.39	PK
V	17473.30	38.99	30.33	6.32	24.55	39.53	54.00	-14.47	AV
H	11650.00	49.96	30.55	5.77	24.66	49.84	68.20	-18.36	PK
H	11650.00	39.78	30.55	5.77	24.66	39.66	54.00	-14.34	AV
H	17473.30	47.29	30.33	6.32	24.55	47.83	68.20	-20.37	PK
H	17473.30	38.78	30.33	6.32	24.55	39.32	54.00	-14.68	AV

Remark:
1. Emission Level = Meter Reading + Antenna Factor + Cable Loss – Pre-amplifier,
Margin= Emission Level - Limit
2. If peak below the average limit, the average emission was no test.
3. The amplitude of spurious emissions which are attenuated by more than 20dB below the permissible value

has no need to be reported.
4. The worst mode is 802.11a20 ,only the worst data is recorded.

Radiated Band Edge ：

Worse case mode:		802.11a					
Frequency	Meter Reading	Factor	Emission Level	Limits	Over	Detector Type	Ant. Pol.
(MHz)	(dBμV)	(dB)	(dBμV/m)	(dBμV/m)	(dB)		H/V
5650	49.19	-0.12	49.07	68.2	-19.13	peak	H
5700	87.61	-0.12	87.49	105.2	-17.71	peak	H
5720	87.5	-0.12	87.38	110.8	-23.42	peak	H
5725	96.69	-0.12	96.57	122.2	-25.63	peak	H
5650	41.14	-0.12	41.02	68.2	-27.18	peak	V
5700	87.99	-0.12	87.87	105.2	-17.33	peak	V
5720	89.22	-0.12	89.1	110.8	-21.70	peak	V
5725	91.66	-0.12	91.54	122.2	-30.66	peak	V
5850	99.22	-0.12	99.1	122.2	-23.10	peak	H
5855	83.69	-0.12	83.57	110.8	-27.23	peak	H
5875	80.57	-0.12	80.45	105.2	-24.75	peak	H
5925	53.08	-0.12	52.96	68.2	-15.24	peak	H
5850	101.57	-0.12	101.45	122.2	-20.75	peak	V
5855	89.12	-0.12	89	110.8	-21.80	peak	V
5875	84.72	-0.12	84.6	105.2	-20.60	peak	V
5925	53.17	-0.12	53.05	68.2	-15.15	peak	V

Remark:
1.Factor =Antenna Factor + Cable Loss － Pre-amplifier
2.The worst mode is 802.11a20, only the worst data is recorded.

5.POWER SPECTRAL DENSITY TEST

5.1 APPLIED PROCEDURES / LIMIT

According to FCC §15.407(3)

Power limits:

(1) For the band 5.15-5.25 GHz.

(i) For an outdoor access point operating in the band 5.15-5.25 GHz, the maximum power spectral density shall not exceed 17 dBm in any 1 megahertz band. If transmitting antennas of directional gain greater than 6 dBi are used, both the maximum conducted output power and the maximum power spectral density shall be reduced by the amount in dB that the directional gain of the antenna exceeds 6 dBi. The maximum e.i.r.p. at any elevation angle above 30 degrees as measured from the horizon must not exceed 125 mW (21 dBm).

(ii) For an indoor access point operating in the band 5.15-5.25 GHz, the maximum power spectral density shall not exceed 17 dBm in any 1 megahertz band. If transmitting antennas of directional gain greater than 6 dBi are used, both the maximum conducted output power and the maximum power spectral density shall be reduced by the amount in dB that the directional gain of the antenna exceeds 6 dBi.

(iii) For fixed point-to-point access points operating in the band 5.15-5.25 GHz, the maximum power spectral density shall not exceed 17 dBm in any 1 megahertz band. Fixed point-to-point U-NII devices may employ antennas with directional gain up to 23 dBi without any corresponding reduction in the maximum conducted output power or maximum power spectral density. For fixed point-to-point transmitters that employ a directional antenna gain greater than 23 dBi, a 1 dB reduction in maximum conducted output power and maximum power spectral density is required for each 1 dB of antenna gain in excess of 23 dBi. Fixed, point-to-point operations exclude the use of point-to-multipoint systems, omnidirectional applications, and multiple collocated transmitters transmitting the same information. The operator of the U-NII device, or if the equipment is professionally installed, the installer, is responsible for ensuring that systems employing high gain directional antennas are used exclusively for fixed, point-to-point operations.

(iv) For client devices in the 5.15-5.25 GHz band, the maximum power spectral density shall not exceed 11 dBm in any 1 megahertz band. If transmitting antennas of directional gain greater than 6 dBi are used, both the maximum conducted output power and the maximum power spectral density shall be reduced by the amount in dB that the directional gain of the antenna exceeds 6 dBi.

(2) For the 5.25-5.35 GHz and 5.47-5.725 GHz bands, the maximum conducted output power over the frequency bands of operation shall not exceed the lesser of 250 mW or 11 dBm + 10 log B, where B is the 26 dB emission bandwidth in megahertz. In addition, the maximum power spectral density shall not exceed 11 dBm in any 1 megahertz band. If transmitting antennas of directional gain greater than 6 dBi are used, both the maximum conducted output power and the maximum power spectral density shall be reduced by the amount in dB that the directional gain of the antenna exceeds 6 dBi.

(3) For the band 5.725-5.85 GHz, the maximum conducted output power over the frequency band of operation shall not exceed 1 W. In addition, the maximum power spectral density shall not exceed 30 dBm in any 500-kHz band. If transmitting antennas of directional gain greater than 6 dBi are used, both the maximum conducted output power and the maximum power spectral density shall be reduced by the amount in dB that the directional gain of the antenna exceeds 6 dBi. However, fixed point-to-point U-NII devices operating in this band may employ transmitting antennas with directional gain greater than 6 dBi without any corresponding reduction in transmitter conducted power. Fixed, point-to-point operations exclude the use of point-to-multipoint systems, omnidirectional applications, and multiple collocated transmitters transmitting the same information. The operator of the U-NII device, or if the equipment is professionally installed, the installer, is responsible for ensuring that systems employing high gain directional antennas are used exclusively for fixed, point-to-point operations.

5.2 TEST PROCEDURE

For devices operating in the bands 5.15-5.25 GHz, 5.25-5.35 GHz, and 5.47-5.725 GHz, the above procedures make use of 1 MHz RBW to satisfy directly the 1 MHz reference bandwidth specified in § 15.407(a)(5). For devices operating in the band 5.725-5.85 GHz, the rules specify a measurement bandwidth of 500 kHz. Many spectrum analyzers do not have 500 kHz RBW, thus a narrower RBW may need to be used. The rules permit the use of a RBWs less than 1 MHz, or 500 kHz, "provided that the measured power is integrated over the full reference bandwidth" to show the total power over the specified measurement bandwidth (i.e., 1 MHz, or 500 kHz). If measurements are performed using a reduced resolution bandwidth (< 1 MHz, or < 500 kHz) and integrated over 1 MHz, or 500 KHz bandwidth, the following adjustments to the procedures apply:

a) Set RBW ≥ 1/T, where T is defined in section II.B.I.a).

b) Set VBW ≥ 3 RBW.

c) If measurement bandwidth of Maximum PSD is specified in 500 kHz, add 10log(500kHz/RBW) to the measured result, whereas RBW (< 500 KHz) is the reduced resolution bandwidth of the spectrum analyzer set during measurement.

d) If measurement bandwidth of Maximum PSD is specified in 1 MHz, add 10log(1MHz/RBW) to the measured result, whereas RBW (< 1 MHz) is the reduced resolution bandwidth of spectrum analyzer set during measurement.

e) Care must be taken to ensure that the measurements are performed during a period of continuous transmission or are corrected upward for duty cycle.

Note: As a practical matter, it is recommended to use reduced RBW of 100 KHz for the sections 5.c) and 5.d) above, since RBW=100 KHZ is available on nearly all spectrum analyzers.

5.3 DEVIATION FROM STANDARD

No deviation.

5.4 TEST SETUP

5.5 EUT OPERATION CONDITIONS

The EUT tested system was configured as the statements of 2.1 Unless otherwise a special operating condition is specified in the follows during the testing.

5.6 TEST RESULTS

Measurement Data : The detailed test data see Appendix Ⅴ

6. -6 DB & 99% EMISSION BANDWIDTH

6.1 APPLIED PROCEDURES / LIMIT

The maximum power spectral density is measured as a conducted emission by direct connection of a calibrated test instrument to the equipment under test. If the device cannot be connected directly, alternative techniques acceptable to the Commission may be used. Measurements in the 5.725-5.85 GHz band, the minimum bandwidth 6 dB bandwidth of U-NII devices shall be at least 500KHz. Measurements in the 5.15-5.25 GHz, 5.25-5.35 GHz, and the 5.47-5.725 GHz bands are made over a bandwidth of 1 MHz or the 26 dB emission bandwidth of the device, whichever is less. A narrower resolution bandwidth can be used, provided that the measured power is integrated over the full reference bandwidth.

6.2 TEST PROCEDURE

a) Set RBW = 100KHz.

b) Set the VBW ⩾3 RBW.

c) Detector = Peak.

d) Trace mode = max hold.

e) Measure the maximum width of the emission that is constrained by the frequencies associated with the two outermost amplitude points (upper and lower frequencies) that are attenuated by 6 dB relative to the maximum level measured in the fundamental emission.

The following procedure shall be used for measuring (99 %) power bandwidth:

1. Set center frequency to the nominal EUT channel center frequency.
2. Set span = 1.5 times to 5.0 times the OBW.
3. Set RBW = 1 % to 5 % of the OBW
4. Set VBW ≥ 3 · RBW
5. Video averaging is not permitted. Where practical, a sample detection and single sweep mode shall be used. Otherwise, peak detection and max hold mode (until the trace stabilizes) shall be used.
6. Use the 99 % power bandwidth function of the instrument (if available).
7. If the instrument does not have a 99 % power bandwidth function, the trace data points are recovered and directly summed in power units. The recovered amplitude data points, beginning at the lowest frequency, are placed in a running sum until 0.5 % of the total is reached; that frequency is recorded as the lower frequency. The process is repeated until 99.5 % of the total is reached; that frequency is recorded as the upper frequency. The 99% occupied bandwidth is the difference between these two frequencies.

6.3 EUT OPERATION CONDITIONS

The EUT tested system was configured as the statements of 2.4 Unless otherwise a special operating condition is specified in the follows during the testing.

6.4 TEST RESULTS

Measurement Data : The detailed test data see Appendix Ⅴ

7. CONDUCTED AVERAGE OUTPUT POWER

7.1 PPLIED PROCEDURES / LIMIT

According to FCC §15.407
The maximum conduced output power should not exceed:

Frequency Band(MHz)	Limit
5725~5850	1W

7.2 TEST PROCEDURE

The EUT was directly connected to the Power meter

1. Device Configuration
If possible, configure or modify the operation of the EUT so that it transmits continuously at its maximum power control level (see section II.B.).
a) The intent is to test at 100 percent duty cycle; however a small reduction in duty cycle (to no lower than 98 percent) is permitted if required by the EUT for amplitude control purposes. Manufacturers are expected to provide software to the test lab to permit such continuous operation.
b) If continuous transmission (or at least 98 percent duty cycle) cannot be achieved due to hardware limitations (e.g., overheating), the EUT shall be operated at its maximum power control level with the transmit duration as long as possible and the duty cycle as high as possible.

2. Measurement using a Spectrum Analyzer or EMI Receiver (SA)
Measurement of maximum conducted output power using a spectrum analyzer requires integrating the spectrum across a frequency span that encompasses, at a minimum, either the EBW or the 99-percent occupied bandwidth of the signal.1 However, the EBW must be used to determine bandwidth dependent limits on maximum conducted output power in accordance with § 15.407(a).
a) The test method shall be selected as follows: (i) Method SA-1 or SA-1 Alternative (averaging with the EUT transmitting at full power throughout each sweep) shall be applied if either of the following conditions can be satisfied:
• The EUT transmits continuously (or with a duty cycle ≥ 98 percent).
• Sweep triggering or gating can be implemented in a way that the device transmits at the maximum power control level throughout the duration of each of the instrument sweeps to be averaged. This condition can generally be achieved by triggering the instrument's sweep if the duration of the sweep (with the analyzer configured as in Method SA-1, below) is equal to or shorter than the duration T of each transmission from the EUT and if those transmissions exhibit full power throughout their durations.
(ii) Method SA-2 or SA-2 Alternative (averaging across on and off times of the EUT transmissions, followed by duty cycle correction) shall be applied if the conditions of (i) cannot be achieved and the transmissions exhibit a constant duty cycle during the measurement duration. Duty cycle will be considered to be constant if variations are less than ± 2 percent.
(iii) Method SA-3 (RMS detection with max hold) or SA-3 Alternative (reduced VBW with max hold) shall be applied if the conditions of (i) and (ii) cannot be achieved.
b) Method SA-1 (trace averaging with the EUT transmitting at full power throughout each sweep): (i) Set span to encompass the entire emission bandwidth (EBW) (or, alternatively, the entire 99% occupied bandwidth) of the signal.
(ii) Set RBW = 1 MHz.
(iii) Set VBW ≥ 3 MHz.
(iv) Number of points in sweep ≥ 2 Span / RBW. (This ensures that bin-to-bin spacing is ≤ RBW/2, so that narrowband signals are not lost between frequency bins.)
(v) Sweep time = auto.
(vi) Detector = RMS (i.e., power averaging), if available. Otherwise, use sample detector mode.
(vii) If transmit duty cycle < 98 percent, use a video trigger with the trigger level set to enable triggering only on full power pulses. Transmitter must operate at maximum power control level for the entire duration of every sweep. If the EUT transmits continuously (i.e., with no off intervals) or at duty cycle ≥ 98 percent, and if each transmission is entirely at the maximum power control level, then the trigger shall be set to "free run".
(viii) Trace average at least 100 traces in power averaging (i.e., RMS) mode.

(ix) Compute power by integrating the spectrum across the EBW (or, alternatively, the entire 99% occupied bandwidth) of the signal using the instrument's band power measurement function with band limits set equal to the EBW (or occupied bandwidth) band edges. If the instrument does not have a band power function, sum the spectrum

7.3 DEVIATION FROM STANDARD

No deviation.

7.4 TEST SETUP

7.5 EUT OPERATION CONDITIONS

The EUT tested system was configured as the statements of 2.4 Unless otherwise a special operating condition is specified in the follows during the testing.

7.6 TEST RESULTS

Measurement Data : The detailed test data see Appendix Ⅴ

8.OUT OF BAND EMISSIONS

8.1 APPLICABLE STANDARD

According to FCC §15.407(b)

Undesirable emission limits. Except as shown in paragraph (b)(7) of this section, the maximum emissions outside of the frequency bands of operation shall be attenuated in accordance with the following limits:

(1) For transmitters operating in the 5.725-5.85 GHz band: All emissions outside of the 5.725-5.85 GHz band shall not exceed an e.i.r.p. of −27 dBm/MHz.

(2)

(i) All emissions shall be limited to a level of −27 dBm/MHz at 75 MHz or more above or below the band edge increasing linearly to 10 dBm/MHz at 25 MHz above or below the band edge, and from 25 MHz above or below the band edge increasing linearly to a level of 15.6 dBm/MHz at 5 MHz above or below the band edge, and from 5 MHz above or below the band edge increasing linearly to a level of 27 dBm/MHz at the band edge.

8.2 TEST PROCEDURE

1. Check the calibration of the measuring instrument using either an internal calibrator or a known signal from an external generator.
2. Position the EUT without connection to measurement instrument. Turn on the EUT and connect its antenna terminal to measurement instrument via a low loss cable. Then set it to any one measured frequency within its operating range, and make sure the instrument is operated in its linear range.
3. Set RBW of spectrum analyzer to 1 MHz with a convenient frequency span.
4. Measure the highest amplitude appearing on spectral display and set it as a reference level. Plot the graph with marking the highest point and edge frequency.
5. Repeat above procedures until all measured frequencies were complete.

8.3 DEVIATION FROM STANDARD

No deviation.

8.4 TEST SETUP

8.5 EUT OPERATION CONDITIONS

The EUT tested system was configured as the statements of 2.4 Unless otherwise a special operating condition is specified in the follows during the testing.

8.6 TEST RESULTS

Temperature：	26 ℃	Relative Humidity：	54%
Pressure：	1012 hPa	Test Voltage ：	DC 5V

(802.11a) 5.745~5.825 GHz

Test CH.	Test Segment MHz	Result dBm/MHz	Limit dBm/MHz
	Below 5650	-41.8	-27
Lowest	5650 to 5700	-36.52	10
	5700 to 5720	-35.32	15.6
	5855 to 5875	-38.58	15.6
Highest	5875 to 5925	-36.68	10
	Above 5925	-44.77	-27

Note: the data just list the worst cases

(802.11n HT20) 5.745~5.825 GHz

Test CH.	Test Segment MHz	Result dBm/MHz	Limit dBm/MHz
	Below 5650	-42.9	-27
Lowest	5650 to 5700	-33.88	10
	5700 to 5720	-33.32	15.6
	5855 to 5875	-38.18	15.6
Highest	5875 to 5925	-41.08	10
	Above 5925	-44.41	-27

Note: the data just list the worst cases

(802.11n HT40) 5.745~5.825 GHz

Test CH.	Test Segment MHz	Result dBm/MHz	Limit dBm/MHz
	Below 5650	-42.00	-27
Lowest	5650 to 5700	-39.33	10
	5700 to 5720	-36.52	15.6
	5855 to 5875	-41.01	15.6
Highest	5875 to 5925	-43.86	10
	Above 5925	-45.51	-27

Note: the data just list the worst cases

9.Frequency Stability Measurement

9.1 LIMIT

Manufactures of U-NII devices are responsible for ensuring frequency stability such that an emission is maintained within the band of operation under all conditions of normal operation as specified in the user's manual.

The transmitter center frequency tolerance shall be ± 20 ppm maximum for the 5 GHz band (IEEE 802.11n specification).

9.2 TEST PROCEDURES

1. The transmitter output (antenna port) was connected to the spectrum analyzer.
2. EUT have transmitted absence of modulation signal and fixed channelize.
3. Set the spectrum analyzer span to view the entire absence of modulation emissions bandwidth.
4. Set RBW = 10 kHz, VBW = 10 kHz with peak detector and maxhold settings.
5. fc is declaring of channel frequency. Then the frequency error formula is (fc-f)/fc × 106 ppm and the limit is less than ±20ppm (IEEE 802.11nspecification).
6. The test extreme voltage is to change the primary supply voltage from 85 to 115 percent of the nominal value
7. Extreme temperature is -20°C~70°C.

9.3 TEST SETUP LAYOUT

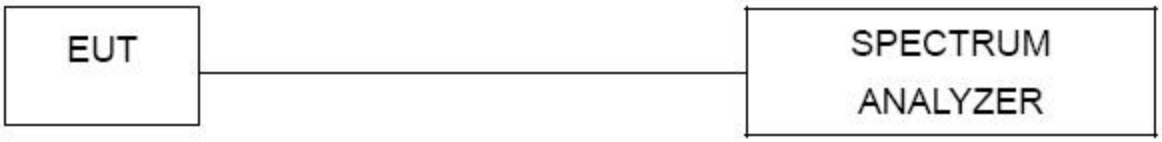

9.4 EUT OPERATION DURING TEST

The EUT was programmed to be in continuously un-modulation transmitting mode.

9.5 TEST RESULTS

Measurement Data : The detailed test data see Appendix Ⅴ

10.ANTENNA REQUIREMENT

Standard requirement:	FCC Part15 C Section 15.203 &RSS-Gen Section 6.8
The applicant for equipment certification shall provide a list of all antenna types that may be used with the transmitter, where applicable (i.e. for transmitters with detachable antenna), indicating the maximum permissible antenna gain (in dBi) and the required impedance for each antenna. The test report shall demonstrate the compliance of the transmitter with the limit for maximum equivalent isotropically radiated power (e.i.r.p.) specified in the applicable RSS, when the transmitter is equipped with any antenna type, selected from this list. For expediting the testing, measurements may be performed using only the antenna with highest gain of each combination of transmitter and antenna type, with the transmitter output power set at the maximum level. However, the transmitter shall comply with the applicable requirements under all operational conditions and when in combination with any type of antenna from the list provided in the test report (and in the notice to be included in the user manual, provided below). When measurements at the antenna port are used to determine the RF output power, the effective gain of the device's antenna shall be stated, based on a measurement or on data from the antenna's manufacturer. The test report shall state the RF power, output power setting and spurious emission measurements with each antenna type that is used with the transmitter being tested. For licence-exempt equipment with detachable antennas, the user manual shall also contain the following notice in a conspicuous location: This radio transmitter [enter the device's ISED certification number] has been approved by Innovation, Science and Economic Development Canada to operate with the antenna types listed below, with the maximum permissible gain indicated. Antenna types not included in this list that have a gain greater than the maximum gain indicated for any type listed are strictly prohibited for use with this device. Immediately following the above notice, the manufacturer shall provide a list of all antenna types which can be used with the transmitter, indicating the maximum permissible antenna gain (in dBi) and the required impedance for each antenna type. 15.203 requirement: An intentional radiator shall be designed to ensure that no antenna other than that furnished by the responsible party shall be used with the device. The use of a permanently attached antenna or of an antenna that uses a unique coupling to the intentional radiator, the manufacturer may design the unit so that a broken antenna can be replaced by the user, but the use of a standard antenna jack or electrical connector is prohibited.	
EUT Antenna:	
The antenna is FPC antenna, the best case gain of the antenna is 4.86 dBi, reference to the Appendix -EUT PHOTO Internal Photos for details	

11. TEST SETUP PHOTO

Reference to the appendix **Test Setup Photo** for details.

12. EUT CONSTRUCTIONAL DETAILS

Reference to the appendix External Photos & Internal Photos for details.

※※※※※ END OF REPORT ※※※※※