TREADMILL-WOODEN WALKING PAD

Treadmill user's manual

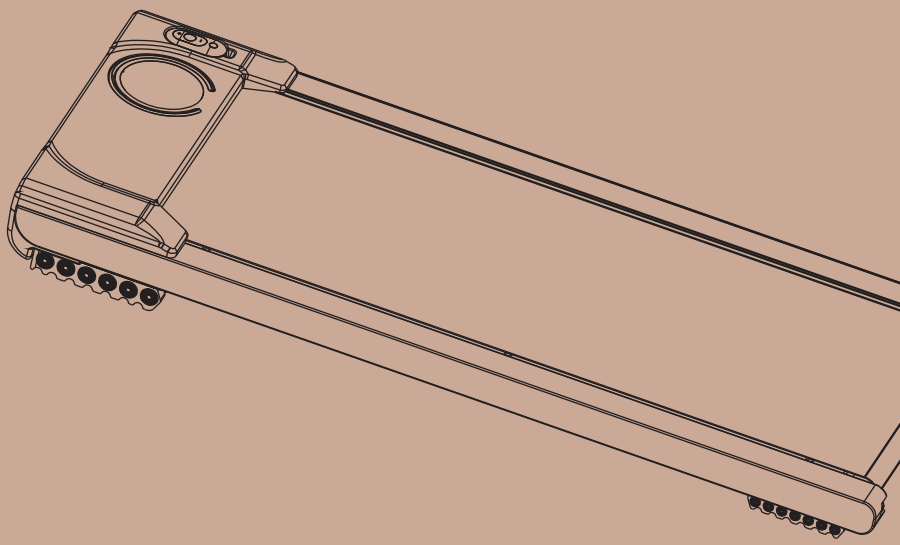

FITSHOW Installation Procedure

Scan the QR code on the right

↓

Http://ifitshow.com/qr

↓

Jump to the App Store to download and install Open the App, allow permission based on the system prompt

↓

Login to the App, please use the mobile number or email to register for the new user

↓

Start Using FITSHOW

Attentions:

Please fill in the correct email or mobile phone number to make sure you can retrieve your password and username via them.

Directory

1. Product Instruction.....01
2. Safety cautions and warnings.....02
3. Parameter and packing list.....06
4. Assembly Guidance.....07
5. Remote control.....08
6. How to use remote control.....09
7. Instruction manual.....10
8. Recommended poses.....12
9. Maintenance.....14
10. Common malfunction and solution.....16
11. FCC Declaration.....17

Product Instruction

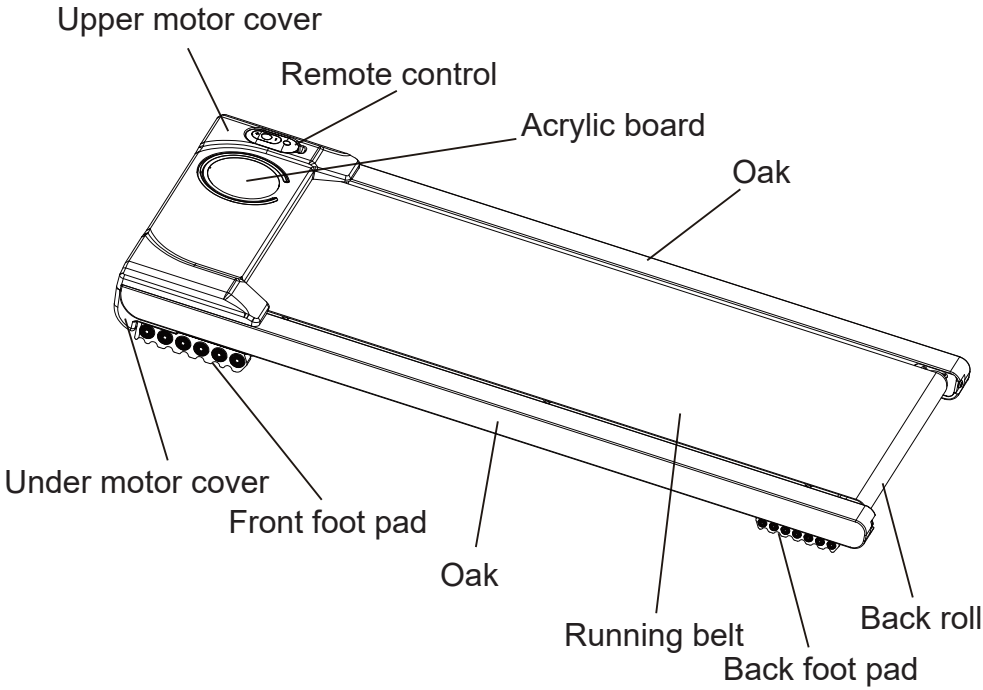

Safety cautions and warnings

Caution! Please read this manual carefully before using the product and take care follow issues:

- This treadmill should be used indoor, do not let this product be soaked and keep it away water, do not put other things on the treadmill.
- Please take the proper sports gear and do warming up before use the treadmill, do not use the treadmill on bare feet.
- Power plug must be grounded and use dedicated circuit, do not share circuit with other electric equipment.
- Kids should stay away from the treadmill to avoid unexpected situation.
- Do not use the tread mill overload and over time, or the motor, control panel, bearing ,running belt and board's life will be greatly shorten. Should do the regular maintenance to keep tread mill in good state.
- Reduce dust and keep certain humidity indoor to prevent electronic and control devices from interference by static electricity.
- Please turn off the treadmill after using.
- Please stop doing exercise if you feel uncomfortable and consult your doctor.
- Please keep the silicone oil away from kid after using to avoid eating accident.

Warning:

To avoid accident and injured, please follow bellowing issues:

- Please check your sport gear and make sure the zipper is lock.
- Do not wear cloth which is easy to be hooked by treadmill.
- Do not put the power cord near heat source.
- Do not use the treadmill outdoor.
- Must unplugged the treadmill before moving it.
- Only one person use it at one time, do not use it with two people and more.

- Please stop doing exercise if you feel dizzy, Chest pain, nausea, or shortness of breath, and consult your fitness coach or doctor.

Warning! Must follow!

- Please consult your doctor if you are under therapy or have any one of following issues:
  1. If you are suffering waist pain or hurt leg, waist or neck before, or have perceived obstacle to leg, waist , neck and hand(also include disc herniation, Spondylolisthesis, Cervical protrusion)
  2. Deformed arthritis, rheumatism, gout
  3. Osteoporosis or bone abnormality
  4. Circulatory system disorder(heart disease, vascular disease, high blood pressure)
  5. Respiratory organs disorder
  6. Implant cardiac pacemaker or other electronic equipment
  7. Malignant tumor
  8. Thrombosis, serious arterial lipoma, acute venous lipoma and other blood circulation disease or skin infections
  9. Perceived obstacle caused by diabetes
  10. Wounded on skin
  11. Sick or fever(38°C or higher temperature)
  12. Spine abnormality or bending
  13. Pregnant women or women are in the menstrual period
  14. Unhealthy and need rest
  15. Obvious bad condition
  16. For physical recovery purpose
  17. Other bad feeling expect above situations
- All issues above may cause unexpected condition and may harm body. Please stop doing exercise if you feel waist pain, dizzy, Palpitations or other abnormal feeling, consult your fitness coach or doctor.

Forbidden

- Never use if you found the shell is broken and off (inside parts are exposed) or welding point is broken. Or it may cause unexpected

condition.

- Never jump on and off the product when you are using, it may cause falling and injured.
- Never store the product out door, near bathroom or any place where is damp.
- Never use or store the product under direct sunlight, near stove, electric blanket or other heating supply equipment, or it may cause electric shock or fire accident.
- Never use the product when you found power cord or plug is broken or socket slack, or it may cause electric shock, short circuit or fire accident.
- Never break or twist the power cord, also never put things on the wire to avoid electric shock or fire accident.
- Never use the product with two or more people at the same time, keep others way when using the product, or it may cause unexpected situation or falling accident.
- Never use the product if user can not express self conscious or can not operate the product by himself/herself. Or it may cause unexpected situation.
- Keep the product away water or other liquid, especially the main base. Or it may cause electric shock or fire accident.

  Never do intense exercise if you don't exercise usually. Do not use it after meal, fatigue, or other uncomfortable state, or it may be harm to your health.
- Never use the product if you are eating or doing other behavior, also never use it after drinking, or it may cause accident or injured.
- Do not use it when feeling sluggish after drinking alcohol, as it may lead to accidents or injuries.
- Never take your watch, bracelet, mobile phone and other valuable objects with you to avoid damage, also take off your keys and knife to avoid hurting yourself.
- Please do check the power cord whether there is needle, garbage or other wet things before using to avoid electric shock, short circuit or fire accident.

- Never touch the plug with wet hand to avoid electric shock.
- Please turn the power switch to off position and unplug the product if do not use it for a period to avoid electricity shock or fire accident caused by insulation deterioration.

Grounding explanation

- This product must be grounding, it can greatly reduce the risk of electricity shock when the product is dysfunction.
- The plug of this product is grounding standard, please use local legal grounding power source to connect the product

Dangerous

- It may cause electricity shock if the product is not grounding properly. Please ask professional electrician to check if you are not sure whether the grounding is correct. Never modify the plug if it can not fit your power source, please ask professional electrician to install a proper power source.
- Never use transfer plug, this product must connect to power source with grounding function.

Parameter and packing list

Parameter		
No.	Parameter	Description
1	Input voltage	110V/60HZ
2	Power	500W
3	Speed range	0.5-4MPH
4	Available running belt area	15.75IN* 43.31IN
5	Operation style	Remote control, motor cover touching, APP
6	Product meas	47.6×20.8×4.5 IN
7	Net weight	42.65LBS
8	Gross weight	49.38LBS
9	Functions	Speed, time, distance, calories

Packing list					
No.	Name	Quantity	No.	Name	Quantity
1	Base	1pc	2	Spare parts set	1pc

Spare parts list					
No.	Name	Quantity	No.	Name	Quantity
1	6# L spanner	1	6	CR2032 battery	1
2	Remote control	1			
3	Silicone oil	1			
4	Manual	1			
5	Power cord	1			

Assembly Guidance

1.Please take out the product from carton then remove the PE bag and put it on the flat floor.

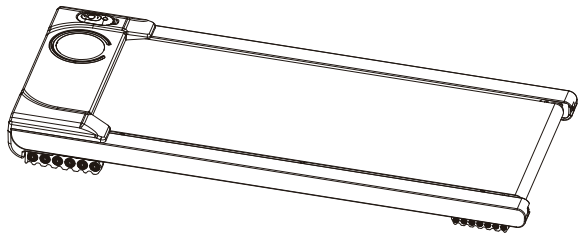

2.Take out the power cord from the bag and insert the plug in front of the base, then connect the plug to your 110v power source, and press the switch to "—", now the product is ready.

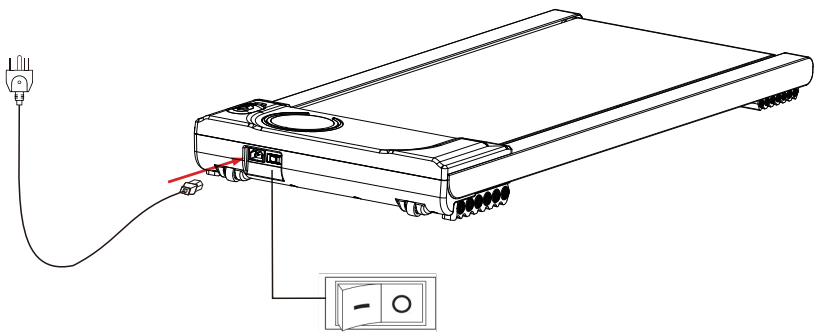

Remote control

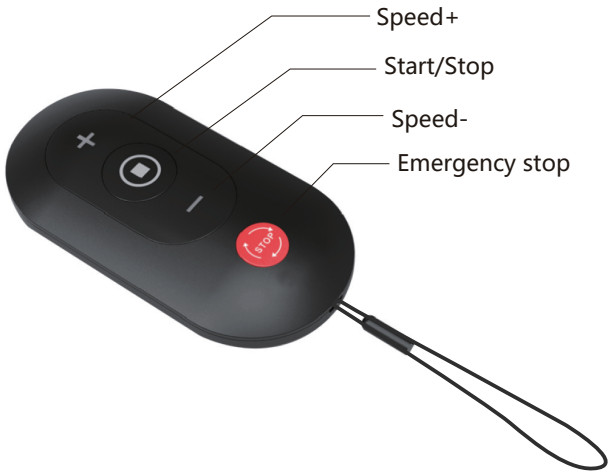

Press this key the product will start from 0.5MPH after a 3 seconds count down, press this key again then the product will stop. (Start/stop function)

\+ Press this key to increase the speed.

\- Press this key to reduce the speed.

This key is only for emergency stop, do not use it as a normal stop key.

Note: The effective range of the controller to receive the control signal is 2-5 meters

How to use remote control

1. For the first time use, please pull out the insulation film of the remote control from the gap in the figure, and the remote control can be powered on

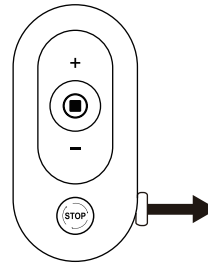

Pull out the insulation

2. To install the battery on the remote control, please unscrew the battery cover counterclockwise as shown in Figure 1, and then insert the battery in the middle of the two coil springs as shown in Figure 2, and pay attention to the face with text on the face. Use CR2025 batteries.

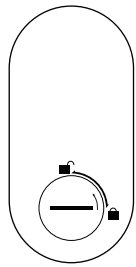

Figure 1

Turn counterclockwise to open the battery cover

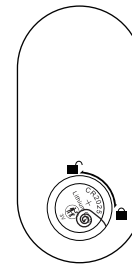

Figure 2

Insert the battery between the two coil springs, noting that the face with the text is facing up

Instruction manual

Brief introduction

- It is a easy operating-panel, it does not require complicated operation

Vocabulary explanation:

- Treadmill related: speed
- Sports related: distance, calorie, time
- Mode: manual mode and auto program
- Manual mode: free adjusted mode without default data
- Auto Program : the mode with preset data.

LED digital display

1.SPEED
2.TIME
3.DISTANCE
4.CALORIE

Touch panel

Keys display as below picture

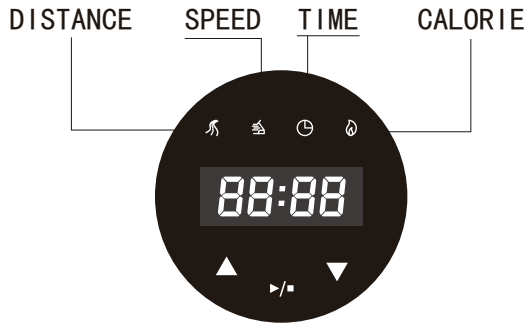

Touch panel display

Start/Stop
Speed-
Speed+

Parameters

1.Voltage 110V/60Hz
2.Minimum speed is 0.5MPH
3.Maximum speed is 4MPH
4.Manual mode maximum time is 99 minutes
5.The maximum distance is 99 miles under manual mode
6.The maximum calorie is 990 Kcal under manual mode

Instructions

1. Plug in the power and the touch panel will display 000 in stand-by mode. Press the start button on remote control, product will start to work after a 3-2-1 countdown, the initial speed is 0.5MPH. Press the+button on the remote control the speed will increase 0.1MPH, the maximum is 4 miles, and press the - key to decrease the speed. Repress the start button the product will stop gradually .
2. The panel will cycle display distance, speed, time, and calorie displays when it is working.
3. You can press the red emergency stop button to quickly stop the movement if an emergency occurs during exercise. Generally, it takes about 15 seconds to stop the machine.

Recommended poses

Warm-up: 5 to 10 minutes of warm-up exercise is required before using the machine.

Breathing: Breathing cannot be shielded during exercise. Usually, when preparing to return to the movement, inhale through the nose and exhale through the mouth. Breathing and movements should be coordinated. If breathing is too fast, stop exercising immediately.

Frequency: The exercise of the muscles of the same part should have 48 hours of rest, and the same part can only
be trained every other day.

intensity: Determine the training weight according to the individual's physical training status, and then practice with the principle of progressive load, soreness can be eliminated.

Diet: In order to protect the digestive system, you can exercise one hour after meals, and eat at least half an hour after training. Drink less water during exercise, especially avoid drinking a lot of water, so as not to increase the burden on the heart and kidneys.

Stretching: No matter what speed you run, it is best to do stretching exercises first, warm-up exercises, muscles are easier to stretch, so first walk for 5 to 10 minutes to warm up, then stop and do stretching exercises 5 times as follows. Do each leg exercise for 10 seconds or more at a time, and repeat it after the workout.

1.Stretch the body down:
Bend your knees slightly, bend your body down slowly, relax your back and shoulders, repeat 3 times (Picture 1).

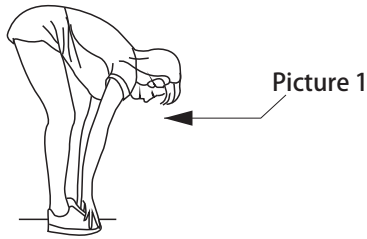

2.Hamstring stretching exercise:
Sit on a clean cushion, straighten one leg, put the other leg close to the inside of the straightened leg, try to touch the toes with your hands, hold for 10-15 seconds, then relax, repeat three times for each leg (Picture 2).

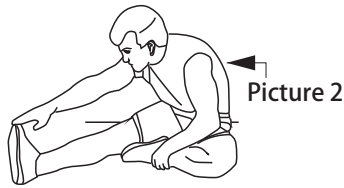

3.Calf and Achilles tendon stretching exercise:
Stand with two hands on the wall or table, keep the rear leg upright and the heel on the ground with one foot behind, lean towards the wall or table, hold for 10-15 seconds, then relax, repeat three times for each leg (Picture 3).

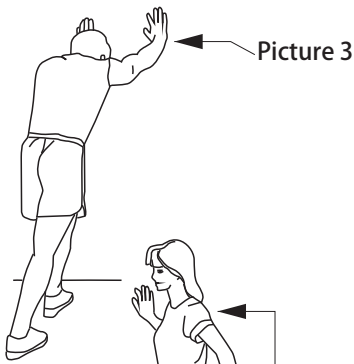

4.Ankle joint stretching exercise:
Hold a fixed support with your right hand to master the balance, then stretch your left hand backwards, grab your left ankle and slowly pull it up to your buttocks until you feel the muscles in front of your thighs tighten, hold for about 10 to 15 seconds , then relax, and repeat 3 times for each leg (Picture 4).

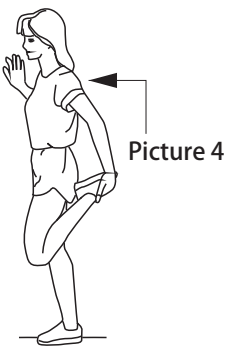

5.Sartorius muscle (inner thigh muscle) stretching exercise:
Put the two soles of the feet facing each other, sit down with the knees facing outwards, grasp the feet with both hands and pull them towards the groin, hold for 10-15 seconds, then relax, repeat 3 times (Picture 5).

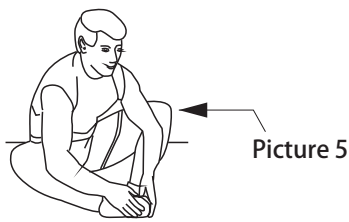

Maintenance

Lubrication:

It is necessary to lubricate it with specially configured methyl silicone oil after using the running belt for a period of time.

Lubricating frequency:

Use for less than 3 hours per week	Lubricate once every 5 months
Use for 4-7 hours per week	Lubricate once every 2 months
Use for more than 7 hours per week	Lubricate once every month

Do not excessive lubrication. Reasonable lubrication is an important factor to improving the service life of the treadmill.

How to Lubricate

To check if the product need Lubricating, you can grab the running belt and touch the central part of the back of the running belt as much as possible. If there is silicone oil stuck inside the running belt (slightly damp), it indicates that lubricant does not need. If the running plate is dry and no silicone resin is felt inside the running belt, that means you should do the lubricating for the product.

- How to lubricate(as pictures show)
- Stop running the belt and fold the machine;
- Lift up the running belt on the back of the main frame: Insert the oil pot as far as possible into the position where the running belt is moving, spray silicone oil on the inside of the treadmill, apply silicone oil on both sides of the running belt, and then run the treadmill at a speed of 0.5 inches/h to evenly apply silicone oil. Gently step on the running belt from left to right, and maintain it for about a few minutes to help the running belt to fully absorb the silicone oil.

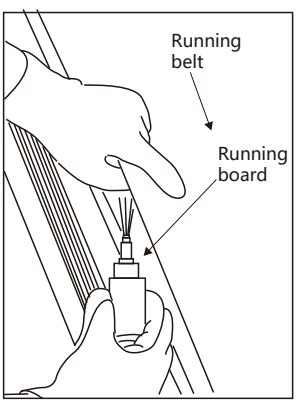

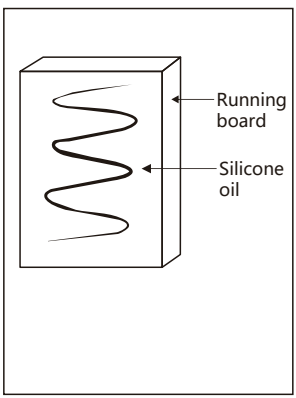

Maintenance

Every treadmill must set the elastic tendency before it leaves factory and after assembly, but it will become loose after using a period. Just like it will stuck or slide sometimes, you can turn the adjusting bolt in clockwise direction, semi-circle a time (left and right at the same time) to adjust the running belt. Don't make it too loose or too tight, or the running belt will slide or make motor over load.

Running belt deviating.

There are some factors will cause this situation：

- The treadmill is not set flat，
- User does not step on the centre of the running belt，
- Caused by 1 or 2 is easy to be solved, just set the treadmill flat and let it idle for several minutes can solved the problem.
  If the deviating still exist, you can use the 6mm Allen wrench adjust it in a quarter turn.
  Deviating is not in the warranty scale, user can maintain it follow the instructions. But please fix it as soon as you find the problem or it will break the running belt

If deviating turns to right, then turn the left screw in counter-clockwise direction,
Turn the right screw in clockwise direction

If deviating turns to left, then turn the left screw in clockwise direction,
turn the right screw in counter-clockwise direction

Turn the left and right screw in clockwise or anticlockwise direction with L-shaped wrench

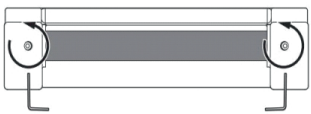

Turn the left and right screw in clockwise or anticlockwise direction with L-shaped wrench

1. Running belt with slipping: user running with slipping or momentary pauses during running;
2. Adjustment the running belt: Tighten the running belt screws on both sides clockwise by 3 turns, and then follow the running direction adjust the deviation direction. If it is to the right, adjust the right screw, and then slowly and sequentially adjust the running belt until the running belt is centered.

Common malfunction and solution

Malfunction	Cause	Solution
The treadmill does not work	Power cord is not connected correctly	Please plug the power cord
	Emergency stop key is not set correctly	Set the emergency stop key to the panel
	Signal circuit is broken.	Please check signer circuit
	Switch is off.	Turn on the switch
The running belt is not moving smoothly.	Need more lubricating.	Lubricate the running belt with silicone oil
	Running belt is too tight.	Adjust the running belt
E01	Signal circuit is broken.	Check the singer circuit
E02	Motor wire is disconnected	Check the motor wire
E05	Over current protected	Restart the product

Other problems and solutions:

1. No display
a: Check whether the power is plug correctly and switch on, whether control is fuse blown.
b: Whether the 4 core line of control panel and display is connect correctly.
c: Whether the control and transformer is intact.

2:The motor does not work
a: Check all wires and make sure they are connect correctly
b: check the code shows on the display

FCC Declaration

This device complies with Part 15 of the FCC Rules. Operation is subject to the following two conditions:
(1)This device may not cause harmful interference.
(2)This device must accept any interference received, including interference that may cause undesired operation.

Changes or modifications not expressly approved by the party responsible for compliance could void the user's authority to operate the equipment. This equipment has been tested and found to comply with the limits for a Class B digital device, pursuant to Part 15 of the FCC Rules. These limits are designed to provide reasonable protection against harmful interference in a residential installation. This equipment generates uses and can radiate radio frequency energy and, if not installed and used in accordance with the instructions, may cause harmful interference to radio communications. However, there is no guarantee that interference will not occur in a particular installation. If this equipment does cause harmful interference to radio or television reception, which can be determined by turning the equipment off and on, the user is encouraged to try to correct the interference by one or more of the following measures:

- Reorient or relocate the receiving antenna.
- Increase the separation between the equipment and receiver.
- Connect the equipment into an outlet on a circuit different from that to which the receiver is connected.
- Consult the dealer or an experienced radio/TV technician for help.

FCC Radiation Exposure Statement
The device has been evaluated to meet general RF exposure requirement. The device can be used in portable exposure condition without restriction.

Made In China