IFLOPROKIT01 INSTRUCTION MANUAL

IFLOPROKIT01 mainly works together with HVAC system. The input of power source of device is wired to 24VAC low voltage output from HVAC secondary transformer. The input power source of the float switch interceptor cable is 24VAC as well to detect air conditioning drainpipe float switch event.

Warning: Changes or modifications to this unit not expressly approved by the party responsible for compliance could void the user' s authority to operate the equipment.

Note: This equipment has been tested and found to comply with the limits for a Class B digital device, pursuant to part 15 of the FCC Rules. These limits are designed to provide reasonable protection against harmful interference in a residential installation. This equipment generates, uses and can radiate radio frequency energy and, if not installed and used in accordance with the instructions, may cause harmful interference to radio communications. However, there is no guarantee that interference will not occur in a particular installation. If this equipment does cause harmful interference to radio or television reception, which can be determined by turning the equipment off and on, the user is encouraged to try to correct the interference by one or more of the following measures:
-- Reorient or relocate the receiving antenna.
-- Increase the separation between the equipment and receiver.
-- Connect the equipment into an outlet on a circuit different from that to which the receiver is connected.
-- Consult the dealer or an experienced radio/TV technician for help.

To maintain compliance with FCC's RF exposure guidelines, the distance must be at least 20cm between the radiator and your body, and fully supported by the operating and installation configurations of the transmitter and its antenna(s).

IFLOPROKIT01 wiring diagram illustration

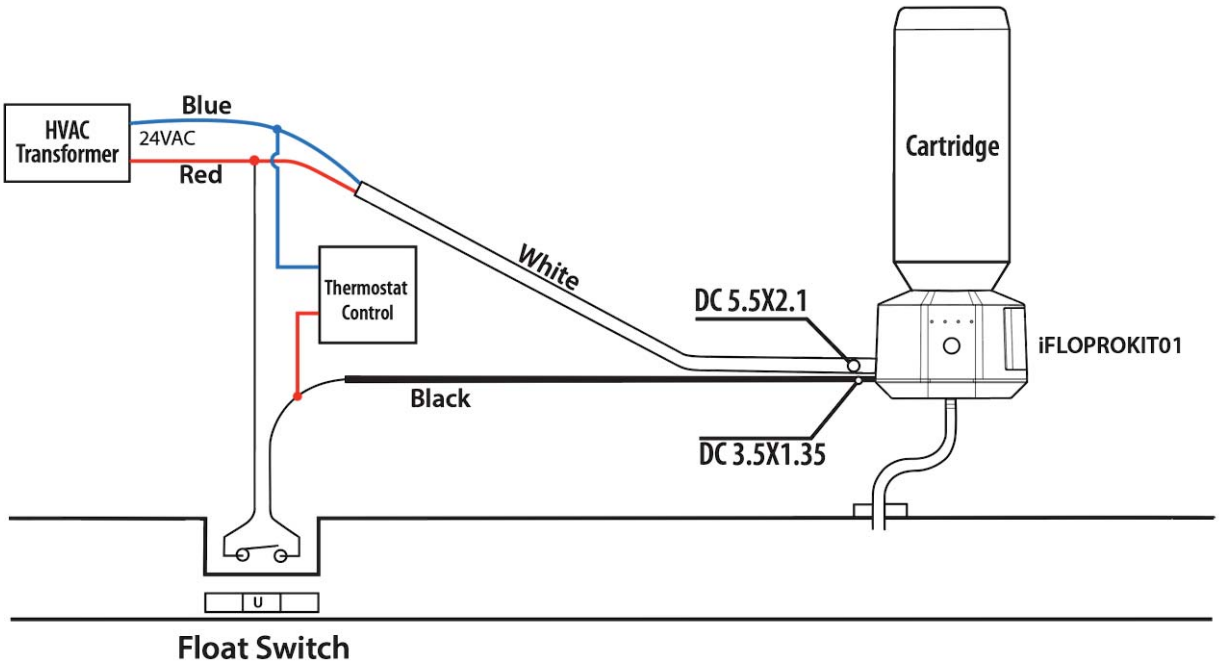

Rating Label:

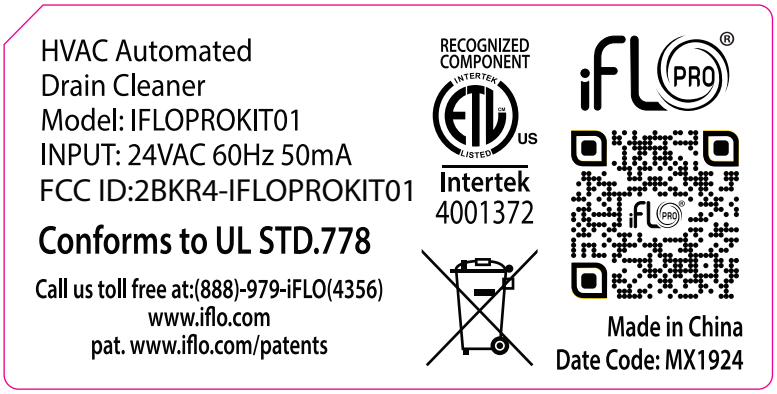

Operate Principle:

When the IFLO Pro AC drain cleaner device connects to the power source, including the float switch interceptor cable plug, then all the front panel icon LED lights will turn on when power button is pressed. The device is now ready and in Standby Mode to wait for APP connection setup communications from the phone.

1. Float Switch function & operation

When the air conditioning drainpipe is clogged, the water inside the pipe rises to activate the float switch and cause the PIP trigger circuit on iFLO device to change from low voltage stage (0V) to high voltage stage (3.2V) to alert iFLO device through the float switch interceptor. The Red LED light of iFLO device has a slow flash, and notify the event(s) to the user's iFLO APP.

2. External Power outage

When the device detects a power outage, the device will automatically use the standby battery supply (2 battery type AA 1.5V) to supply power source, and the Amber LED light off and notifies the event(s) to a user's iFLO APP if Wi-Fi network is available, meaning that it is running off its own battery back-up, at the time of outage.

How to setup iFLOPROKIT01

1. Position iFLOPROKIT01 on HVAC panel or other desired location near power source. Step-by-Step Details can be found from the APP.
2. Turn off the HVAC breaker on the unit and on the house main electrical panel breaker as well.
3. Release HVAC front panel.
3. Connect the red and blue wire from the provided power cord of the device to HVAC low voltage output source of the secondary stepdown transformer (24VAC).
4. Connect float switch interceptor wire together with other end wire of float switch (see diagram) and thermostat.
5. Install 4 AA type 1.5VDC batteries in the device's battery compartment.
6. Plug power source barrel DC plug 5.5x2.1mm connector into the device.
7. Plug float switch intercept barrel DC plug 3.5x1.35mm into the device.
8. Turn all circuit breaker on after step 1 – 7 are completed. Confirm power has been fully restored.
9. Scan QR code to install device APP to pair for final setup.

Device Maintenace

1. Turn off the power before any maintenance.
2. Do not immerse the float switch interceptor in water for cleaning.
3. Do not use corrosive or oily liquids to clean the surface.
4. When cleaning the surface of the device, it is recommended to clean the surface with an air duster.
5. When replacing a battery, ensure the same battery product specifications, and it can be found from the device's rating label. Do not use another battery type (i.e. rechargeable, that lithium) that does not meet the requirements.

Cautious

1. The iFLOPROKIT01 is suitable for indoor use.
2. The input power source of device must be the same as illustrated on rating label. Otherwise, personal injury may occur.
3. When batteries life expectancy is lapsed, discard batteries cautiously and dispose batteries as relevant to environment laws or regulations.
4. Do not change or repair the device without authorization, otherwise it may cause damage to the device or other risks of injury.
5. The device can only be used if it is matched with an appropriate load as defined here in this manual.
6. If the lead is damaged, please do not repair it yourself, please ask a maintenance professional or the company's designated maintenance personnel to replace it.
7. Contact customer service support via **www.iflo.com** when the device is damaged.