EM31Pro
Harmonic Equatorial Mount
USER MANUAL v2.0

EMCAN

www.emcanastro.com

Reading Tips

Reading Interpretation

Thank you for choosing EM31Pro Harmonic Equatorial Mount.

The manual is based on the factory default specifications. Therefore, some specifications or appearance of your instrument may be different. This manual is subject to change without prior notice.

The manual can still be used as a guide when there are differences in appearance or structure but no substantial differences in function or the use methods.

In order to ensure proper use of the equatorial instrument, please read this user manual carefully before starting to use

Symbol Description

forbidden

Important points

Operation instruction

Blue stands for counterclockwise rotation

Green stands for clockwise rotation

Reading Tips

Security precautions

⚠ Please install and use the mount in strict accordance with the steps and precautions reminded in this manual, operators shall be responsible for any damage to the equipment or personal injury caused by improper operation.

⚠ The operating temperature of this equatorial mount ranges from -15℃ to 40℃. Please use the equatorial mount reasonably under proper environmental conditions

⚠ After all devices are installed, check for the interference strictly and carefully. Collisions can cause damage to equipment components, causing the equatorial mount malfunction or affecting usage accuracy。 If any interference or other emergency situations are found, immediately unplug the power.

⚠ Please be careful when you carry, assemble or disassemble the main body and other heavy components and other equipments used on the mount . Or it may cause damage to the equipments or even personal injury.

⚠ Please be sure to place the whole equipments on solid and flat ground, Or the mount may fall over, which may cause damage to the equipment or even personal injury.

⚠ If there are children around when using, please pay attention to protecting their safety

⚠ Do not wipe the surface with corrosive liquid.

⊘ Unauthorized disassembly is strictly prohibited. If disassembled by oneself, the warranty is invalid.

Contents

Reading tips p2-3
Product overview
- Introduction P5
- Specification P6
- Packing accessories P7
- Components of main body P8
- Interface size P9
- Optional fittings P10-14

Standard usage process
- Equatorial mode P15-16
- Altazimuth mode P17-18

Installation and commissioning
- Pier extension and tripod installing P19-27
- Latitude and azimuth adjustment P28-31
- Dovetail installing P32-33
- Altazimuth mode (side) P34-39
- Altazimuth mode (top) P40-52
- Cable connection P53-56
- Mode option P57

Installation of accessories P58-59
Installation of battery P60
Onstep quick start guide
- Onstep guide P61-68
- Handle controller instruction P69-76
- Onstep connects to other devices P77-79

Updating of firmware P80-84
Warranty Statement P85-86

Product Overview

Brief introduction

The EM31 Pro Harmonic Equatorial Mount is a lightweight equatorial mount that uses harmonic reducers. EM31 Pro Harmonic Equatorial Mount, with three modes of German equatorial mount, side altazimuth mount and top altazimuth mount, can meet the needs of both astrophotography and sky observation, especially in outdoor environments, its small size and lightweight design can provide astrophotographers and astronomical observers great convenience for carrying and using. Meanwhile, its complete set of fast installation and speed adjustment design system can help users enter the shooting and observation state faster.

Product Overview

Specification

1. Weight of the main body： approx. 4kg (without Dovetail & adapter)
2. Payload： ≤15kg (without counterweight)
   ≤20kg (with counterweight)

Note: payload calculated in the condition that the the distance between telescope's central axis and the base of dovetail saddle is less than 100mm

3. Latitude adjustment： 0°~90° （micrometer adjustment +/-10°）
4. Azimuth adjustment： -8°~+8°
5. RA： harmonic reducer model 17 (reduction ratio 1:100)
6. DEC： harmonic reducer model 17 (reduction ratio 1:100)
7. Motor: 42 Closed-loop stepper motor
8. Goto speed： max 6°/s
9. Power port： DC5.5-2.1 (12v 5A)
10. Power consumption： tracking 0.4A， Goto 0.7A
11. Communication interface： usb2.0， wifi， Bluetooth
12. dovetail： Vixen 75° & LOSMANDY 60°； Arca(Optional)
14. Home position： by bubble levels
15. Mode： equatorial mode; Altazimuth mode (side &top)
16. Hand controller： Wired hand controller

⚠ The payload is not exactly equal to the total weight of the equipment to be loaded. The effective weight that the equatorial instrument can bear is closely related to the center of gravity position of the entire equipment, and the equipment with a high center of gravity will correspondingly offset the load-bearing capacity of the equatorial instrument.

Before installing heavy equipment with a high center of gravity, please refer to the EM31Pro load formula to confirm whether it is overweight.

Product Overview

Packing & Accessories

The standard of the harmonic equatorial mount includes components and quantities as follows：

1	EM31 Pro body	1
2	Hand controller	1
3	dovetail （VIXEN & LOSMANDY）	1
4	Front multifunctional bracket	1
5	Adapter	1
6	0.5m USB2.0 cable	1
7	2m USB 2.0 cable	1
8	Soft bag	1

Product Overview

Components name

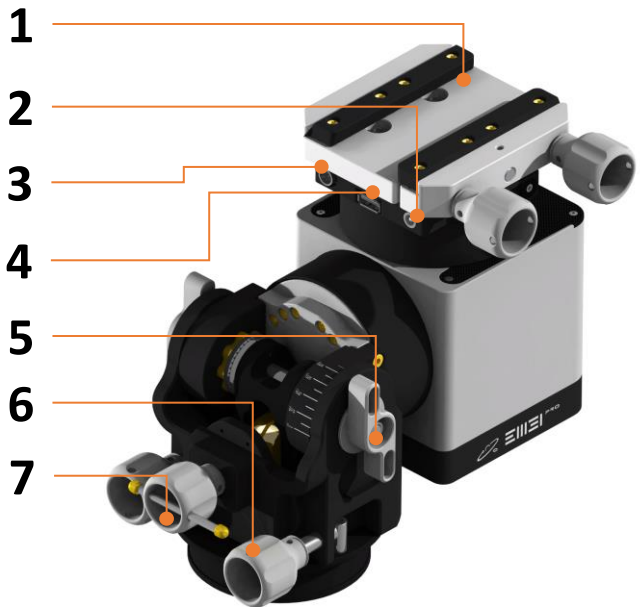

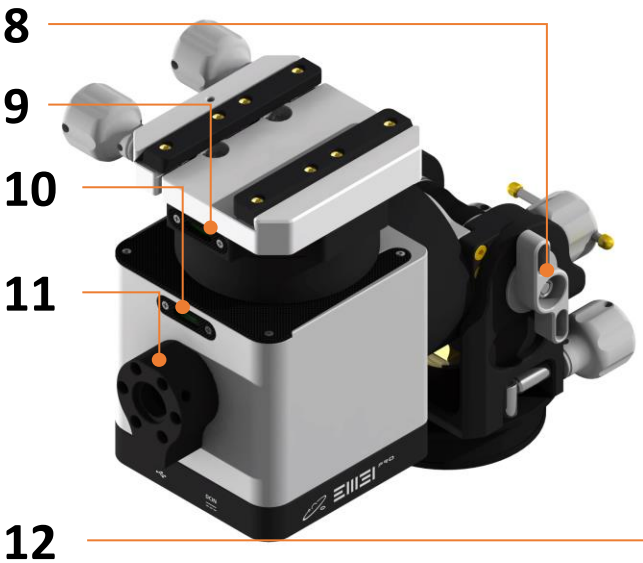

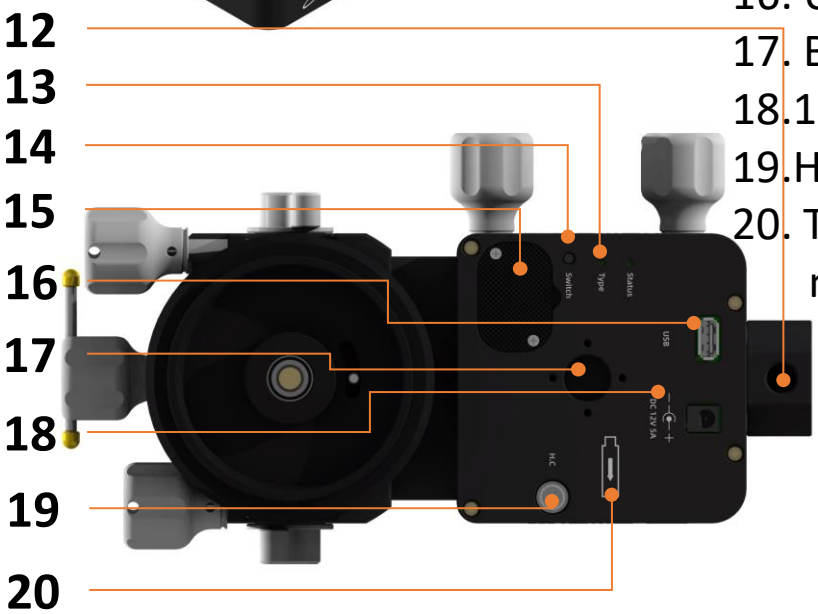

1.Dovetail
2. DEC 12v DC 5.5*2.1
3.DEC Hand controller port
4.DEC USB port （type A）
5.Main altitude locking knob
6. Azimuth adjustment knob
7. Altitude fine adjustment knob
8. Auxiliary altitude locking knob
9.Bubble level for DEC axis
10. Bubble level for RA axis
11. Multifunctional front support
12.Counterweight bar interface
13. Mode indicator light
14. Mode switching button
15. Battery cover plate
16. USB （type A ）
17. Ball head interface
18.12v DC 5.5*2.1 power port
19.Hand controller port
20. Telescope directional mark

Product Overview

Interface size

The standard dovetail of EM31Pro can be replaced, and the installation dimensions of the dovetail are as follows:

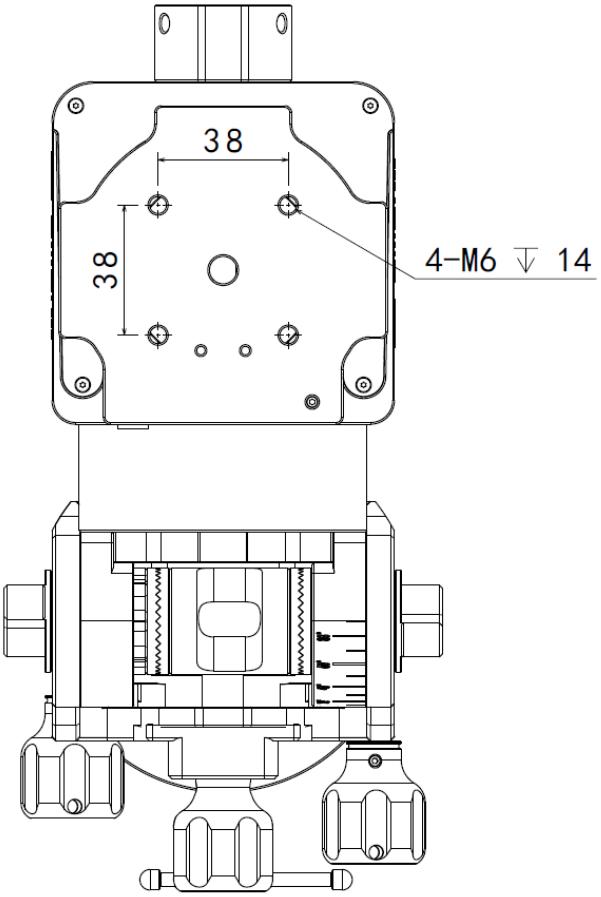

EM31 supports counterweight bar with a diameter less than 20mm, and with length less than 300mm, the counterweight should be no more than 5kg

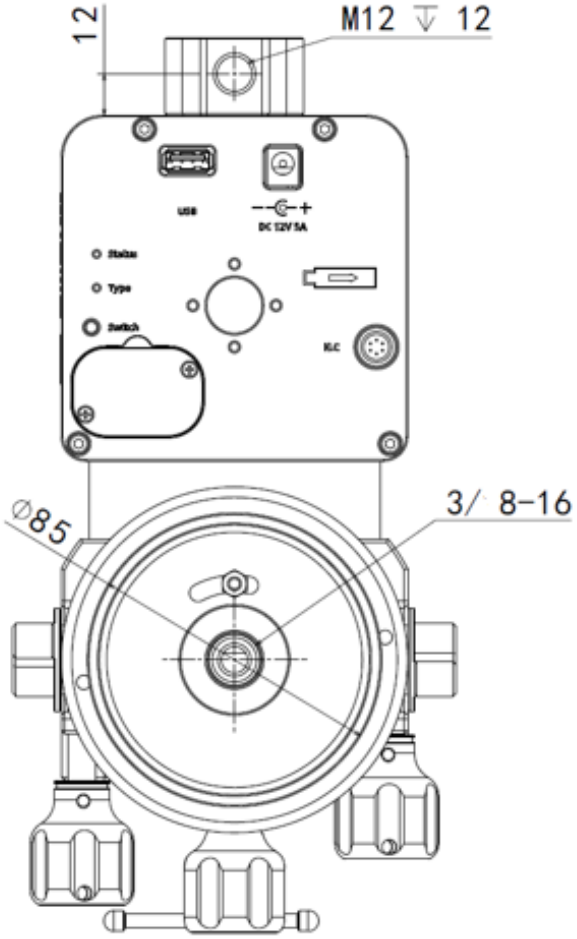

The screw thread length of the counterweight bar shall not exceed 12mm

Product Overview

Optional accessories：

EM TC44S Tripod

RP200 Extension rod

AD120 Horizontal adjuster

Parameters：	
Tripod interface：85mm	Locking method：three screws locked
Carbon fiber tube diameter：44mm	Tube thickness：2mm
Storage length：	620mm（EM-TC44S）
Unfolded height:	EM-TC44S 530mm
	EM-TC44L 720mm
	EM-TC44U 810mm
Weight：	EM-TC44S approx. 2.5kg
	EM-TC44L approx. 3.3kg
	EM-TC44U approx.4.2kg

⚠ This accessory needs to be purchased separately

Product Overview

Optional accessories：

EMH150 Fast-assembling pier extension

Material: Aluminum(AL6061),
Stainless steel
Size: H150mm dia110mm
Weight: 1.2kg

⚠ This accessory needs to be purchased separately

Product Overview

Optional accessories：

Top-mounted mode supporting bracket

Material:
Aluminum(AL6061),Stainless steel,
Titanium alloy(counterweight bar)
Size: L350mm
Weight: 1.8kg

Suitable for binocular telescopes

⚠ This accessory needs to be purchased separately

Product Overview

Optional accessories：

Ball head mount adapter

Arca board strips

⚠ This accessory needs to be purchased separately

Product Overview

Optional accessories :

Adapter for QHY
Pole master

Adaptor for Ipolar
(Only applicable to
specific version)

⚠ This accessory needs to be purchased separately

Standard Use Procedure

Use Procedure

Equatorial mount Mode

Install equipment

↓

Set time and location

↓

Set zero position

↓

Polar alignment

↓

Select target and Goto

↓

Using Target Calibration

↓

Come into use

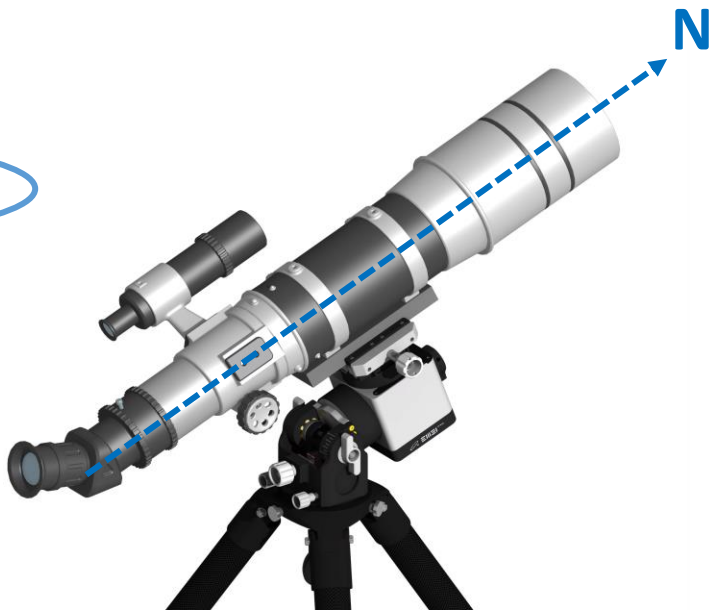

⚠

The coordinates and time of the using site must be set correctly, and the zero position must be set correctly, otherwise it may cause target goto errors and even equipment collisions

Standard Use Procedure

Use Procedure

Zero position of Equatorial mount mode

The zero position of the German Equatorial mount is shown in the diagram below, and the telescope points to the North Pole

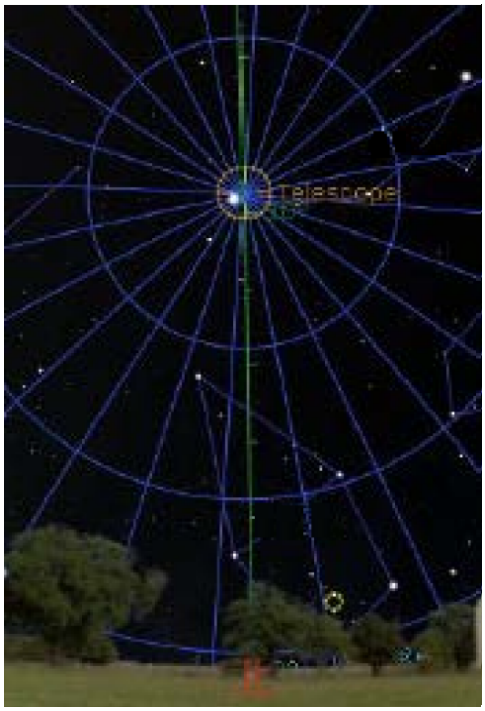

EM31 Pro can confirm the zero position of Equatorial mount through RA and DEC axis bubble level

Standard Use Procedure

Use Procedure

Altazimuth Mode (side & top)

Install equipment

↓

Horizontal adjustment

↓

Mode confirmation

↓

Set zero position

↓

Select target and Goto

↓

Using Target Calibration

↓

Start observation

⚠

The coordinates and time of the observation site must be set correctly, and the zero position must be set correctly, otherwise it may cause target goto errors and even equipment collisions

Standard Use Procedure

Use Procedure

Zero position of Altazimuth Mode (side & top)

The zero position of the Altazimuth mode is shown in the diagram below, and the telescope points to the North Pole

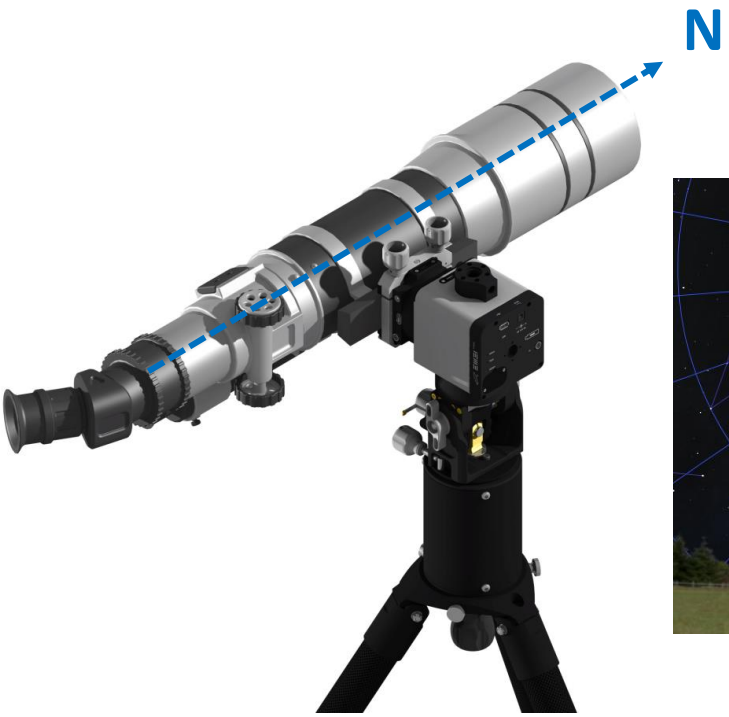

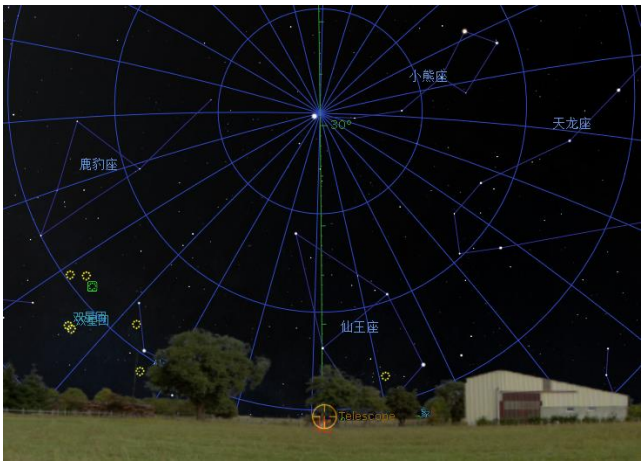

The initial zero position can be confirmed through a mobile compass and level

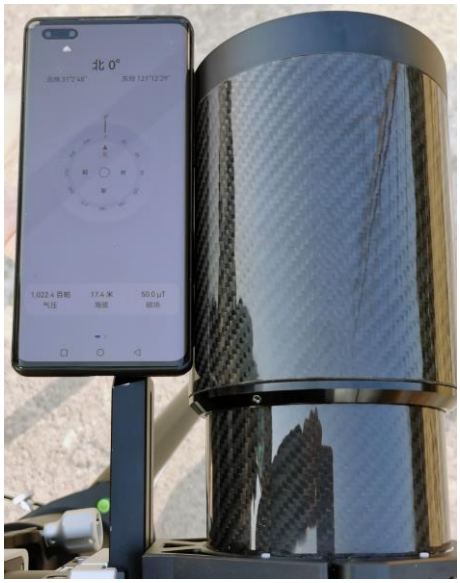

Installation and Use

Installation of equatorial mount with pier extension and tripod

EM 31 Pro can be installed on non central axis photographic tripod with a bore diameter of 85 mm.

Installation and Use

Installation of equatorial mount with pier extension and tripod

Standard accessories for other tripod mounting are not officially available. If users need to mount the equatorial instrument on other tripods, they need to design and process the adapter and mounting bolts by themselves.
The dimensions need to follow the chart below：

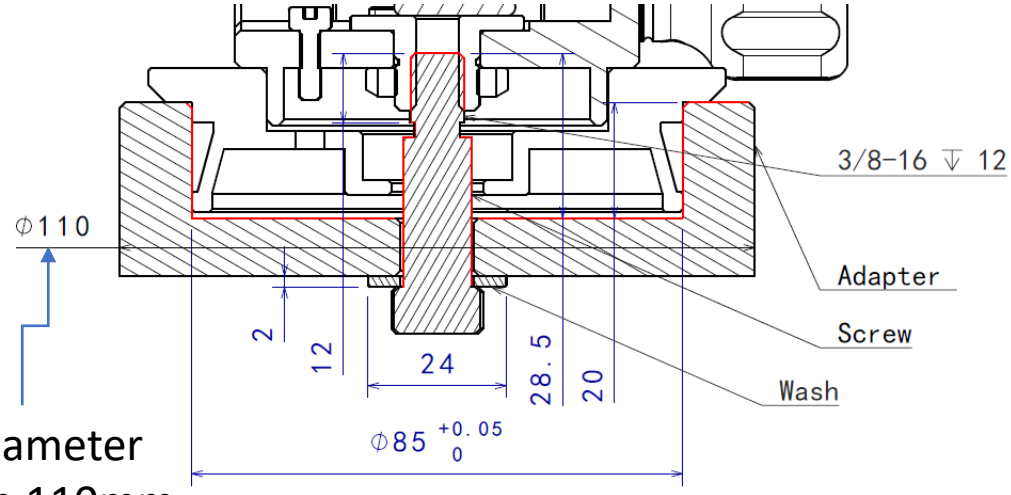

Outer diameter less than 110mm

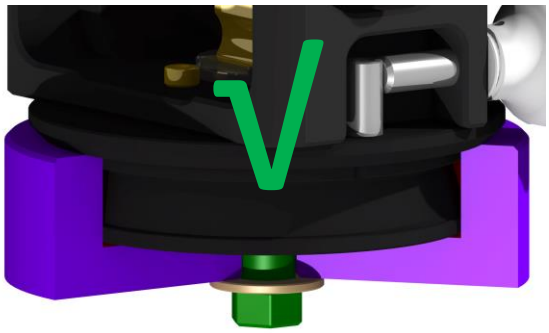

Correct adapter structure

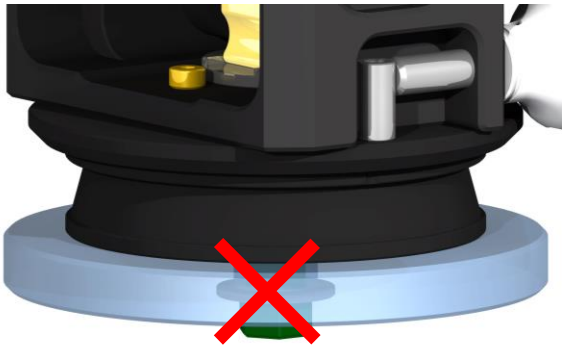

Incorrect adapter structure, it is prohibited to connect to the equatorial instrument through only one plane

Installation and Use

Installation of equatorial mount with pier extension and tripod

When using the EM TC44 tripod, the equatorial mount body can be directly installed on the tripod through the adapter, and locked by the three knobs of the tripod to achieve more reliable connection.

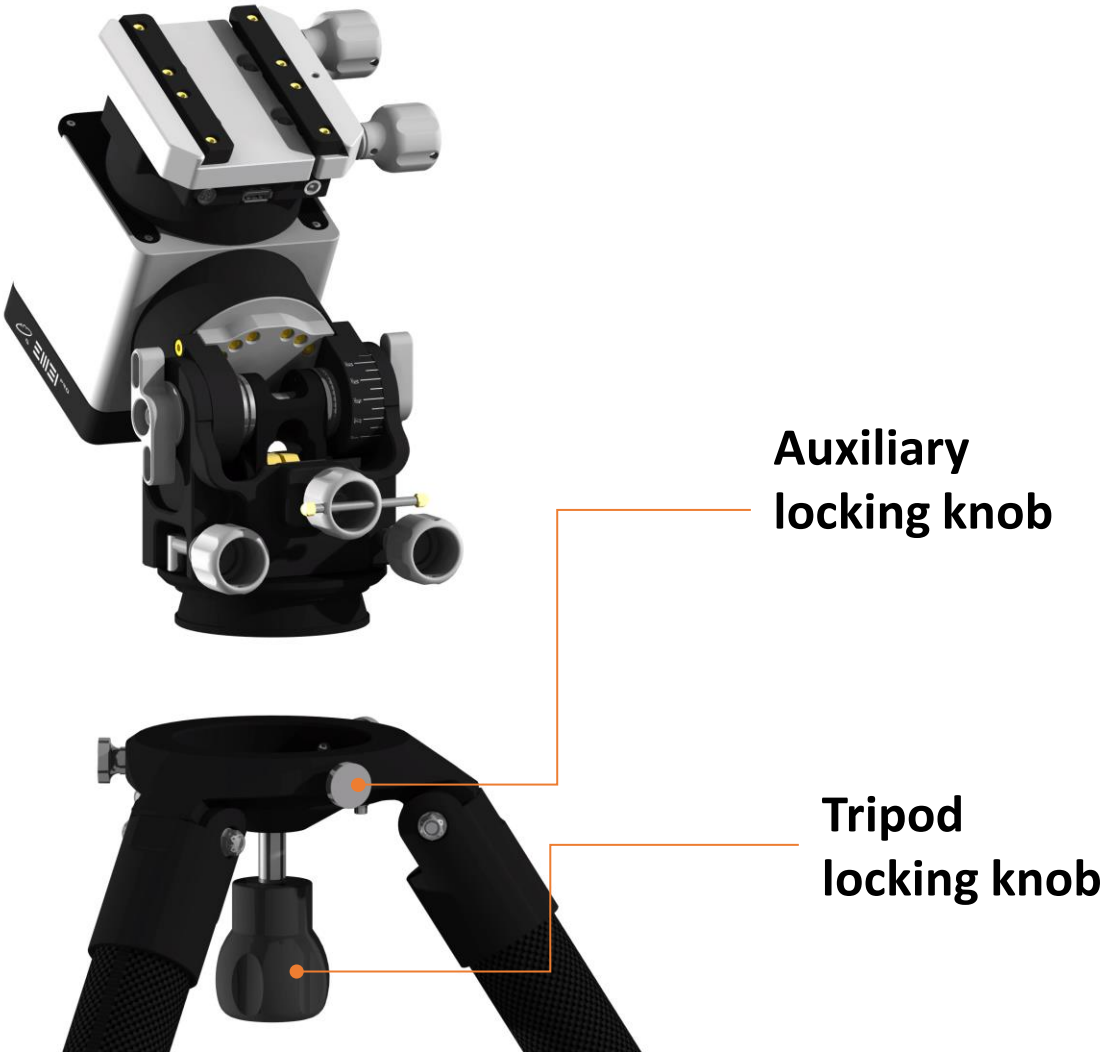

Installation and Use

Installation of equatorial mount with pier extension and tripod

EM TC44S is a high load tripod specially designed for harmonic equatorial mount, in order to improve the rigidity of the tripod, it is designed as a non-retractable structure, and the height and supporting area of the tripod are expanded by installing the heightening section.

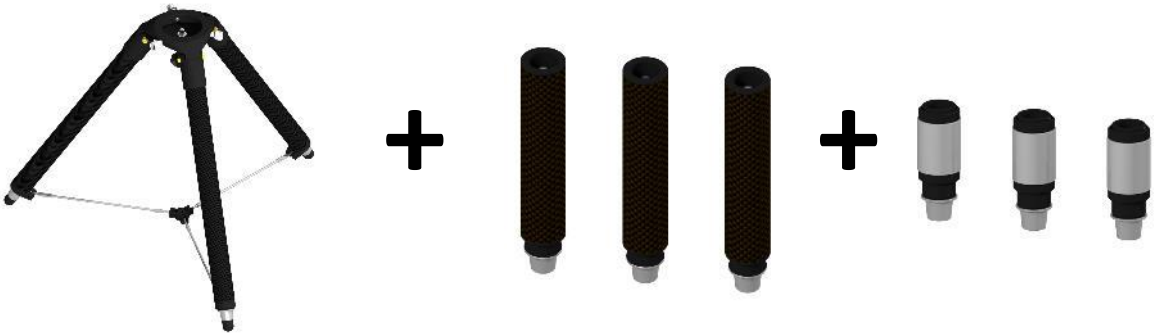

Rotate clockwise to install the extension rod and horizontal adjuster

Installation and Use

Installation of equatorial mount with pier extension and tripod

The harmonic equatorial mount is small in size. When a longer telescope is used, there is a problem of interference between the telescope and the tripod near the meridian. At this time, it is necessary to use the pier extension to avoid interference.

Installation and Use

Installation of equatorial mount with pier extension and tripod

Installation steps with the pier extension

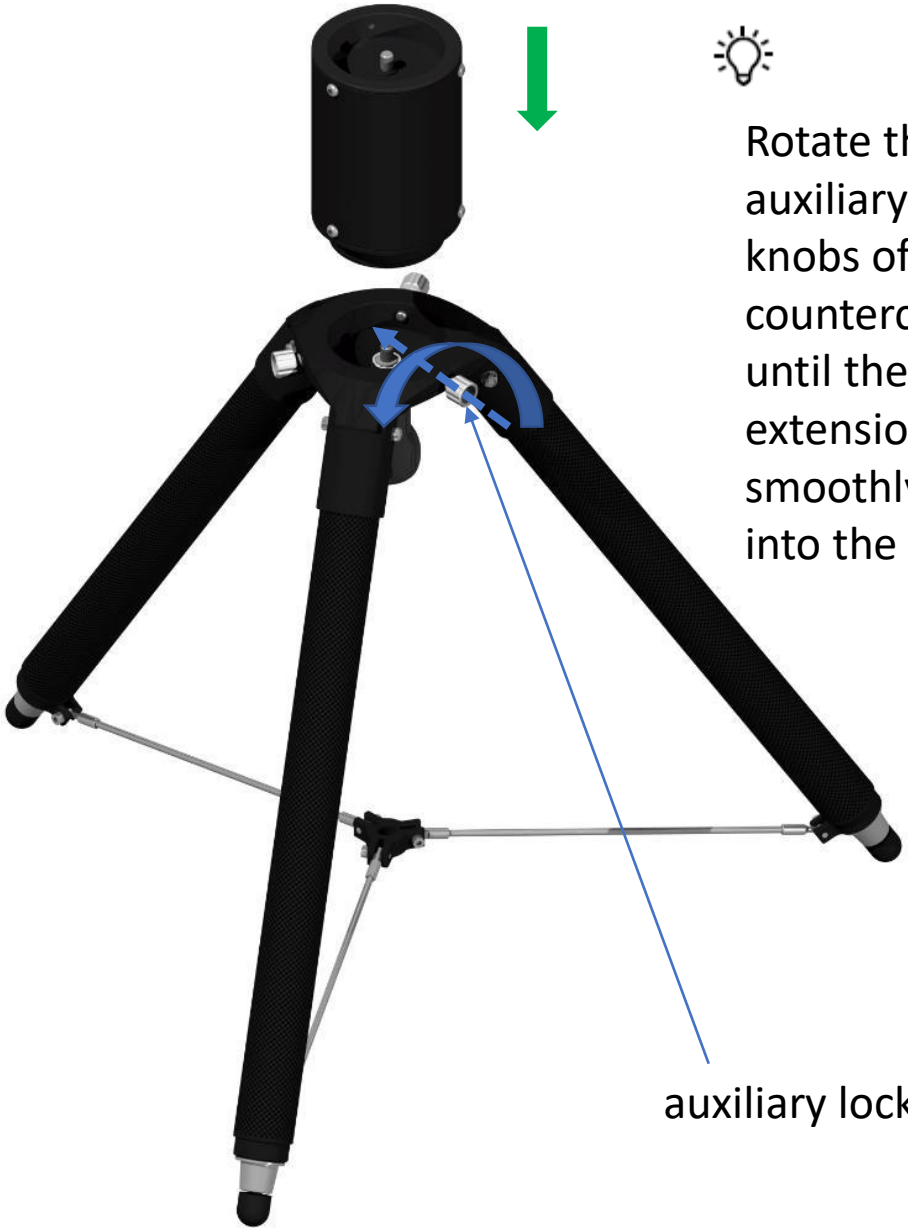

Rotate the three auxiliary locking knobs of the tripod counterclockwise until the pier extension can be smoothly installed into the tripod tray

Installation and Use

Installation of equatorial mount with pier extension and tripod

Installation steps with the pier extension

Gently Push up the main tripod locking knob and rotate it clockwise until the knob and pier extension cannot rotate relative to each other

Note that if this step is not performed correctly, the equatorial mount body and pier extension will not be separated properly when disassembling the equipment.

Installation and Use

Installation of equatorial mount with pier extension and tripod

Installation steps with the pier extension

Place the equatorial mount body with the adapter into the pier extension

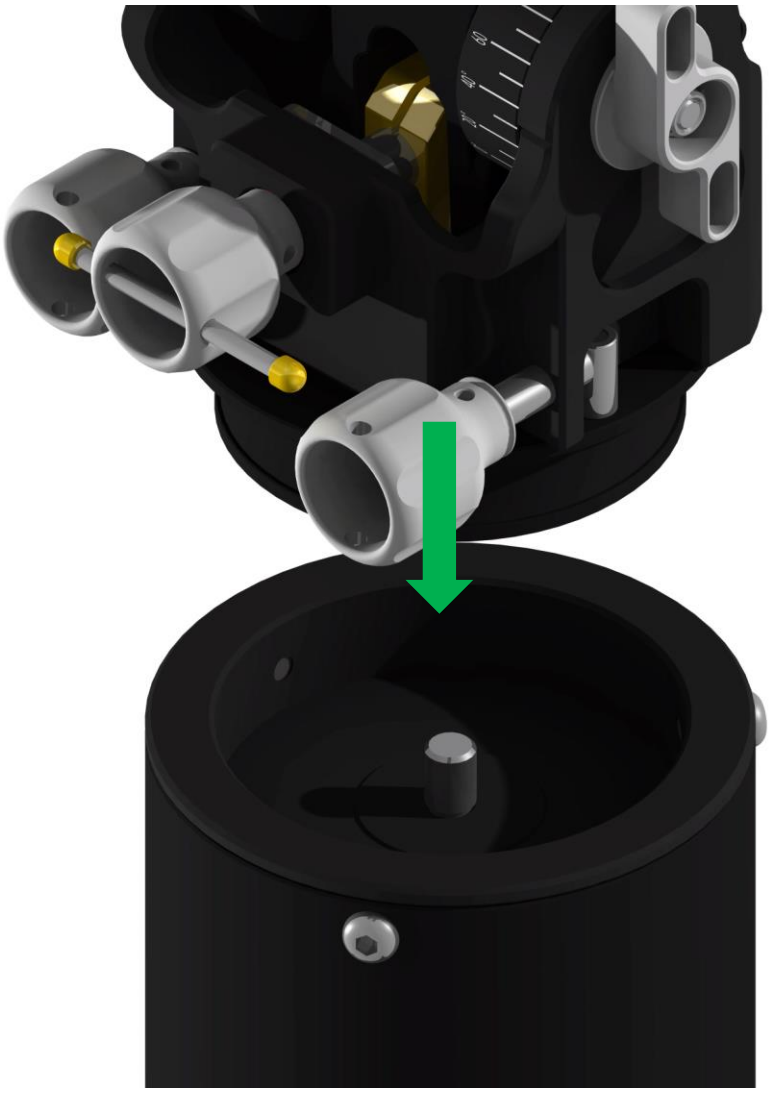

Installation and Use

Installation of equatorial mount with pier extension and tripod

Installation steps with the pier extension

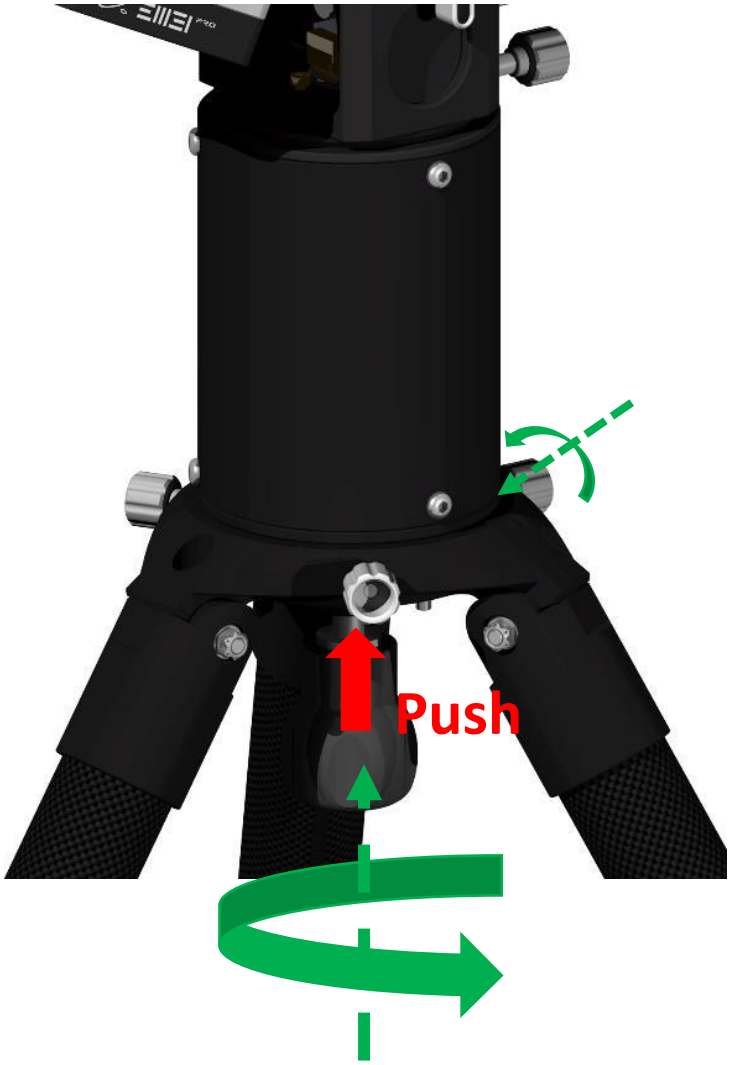

Push up and continue to rotate the main tripod locking knob clockwise until it locks tightly

Rotate the three tripod auxiliary locking knobs clockwise until they lock securely

Up to now, the installation of the body, pier extension, and tripod is completed

To lock the body, push the main locking knob upwards with slight force first before clockwisely rotating the knob

Installation and Use

Adjustment of altitude and azimuth angles of the German equatorial mount

Altitude coarse adjustment

Rotate counterclock wise to release the auxiliary altitude locking knob

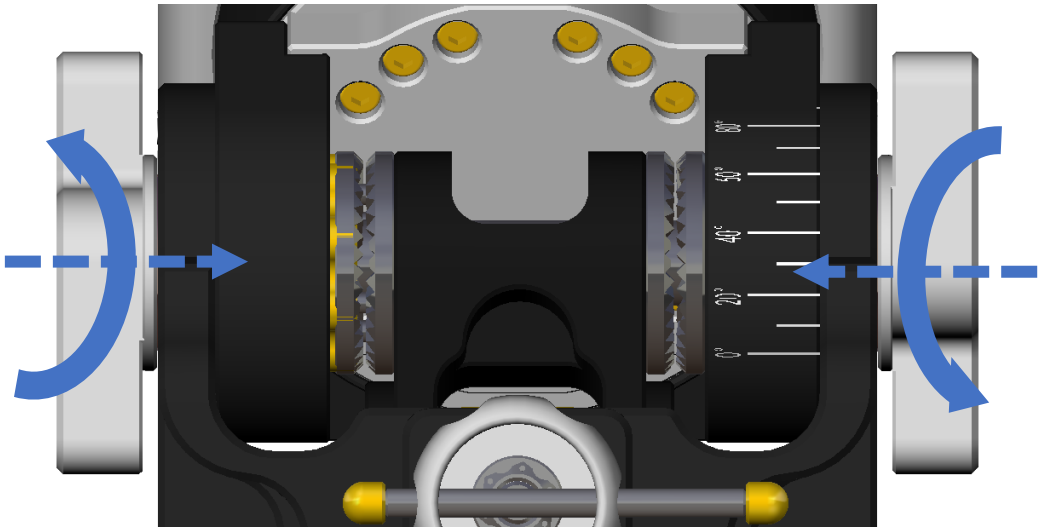

Rotate the main altitude locking knob counterclockwise until the two pairs of flat gears are completely separated. At this point, the altitude angles can be freely adjusted

When the main altitude locking knob is loosened, the body will lose its support. During the coarse adjustment process, be sure that there is always a hand to support the body until the main altitude knob is locked again

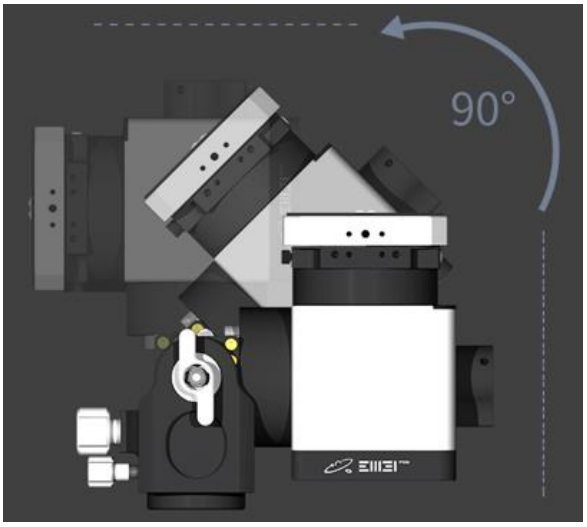

Installation and Use

Adjustment of altitude and azimuth angles of the German equatorial mount

Altitude coarse adjustment

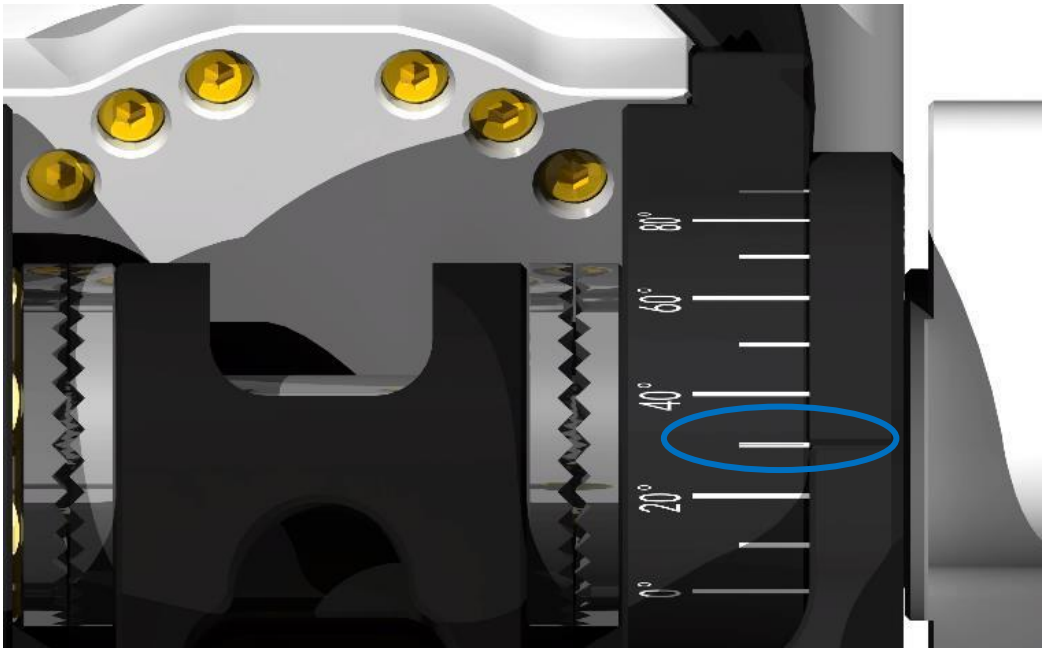

Refer to the altitude scale, adjust the altitude angle to the approximate local latitude position. (For example, if the local latitude is 31°13'20 ", lock the altitude near 30 °)

⚠

When the main altitude locking knob is loosened, the body will lose its support. During the coarse adjustment process, be sure that there is always a hand to support the body until the main altitude knob is locked again

⚠

Roughly adjust the altitude angle at 10 ° intervals, such as 0 °, 10 °, 20 °, 30 °... 90 °

Installation and Use

Adjustment of altitude and azimuth angles of the German equatorial mount

Altitude coarse adjustment

Rotate the main altitude locking knob clockwise at the rough latitude position until the flat gear engages again. Rotate the auxiliary altitude locking knob clockwise to complete coarse adjustment of the altitude angle

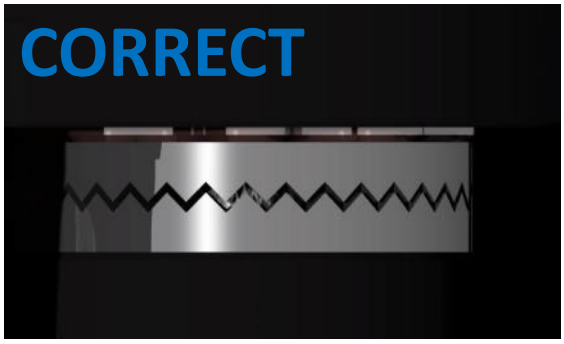

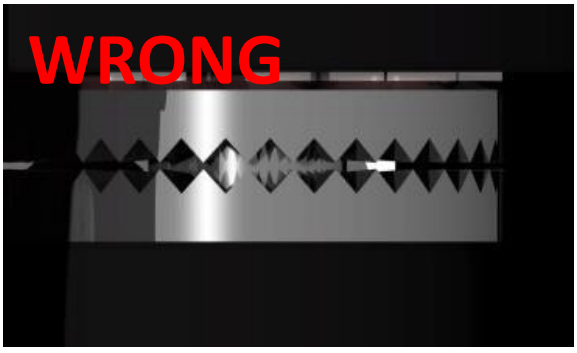

Note that the flat gear must engage correctly, as shown in the left diagram. Incorrect engagement may cause the equipment to slip

When the main altitude locking knob is loosened, the body will lose its support. During the coarse adjustment process, be sure that there is always a hand to support the body until the main altitude knob is locked again

Altitude angle coarse adjustment completed

Installation and Use

Adjustment of altitude and azimuth angles of the German equatorial mount

Precise alignment of polar axis

1. For Astrophotography, polar calibration can be completed through plate solving
2. EM31 Pro supports the installation of Pole master or Ipolar to complete polar calibration

Adapter for electronic polar alignment scope

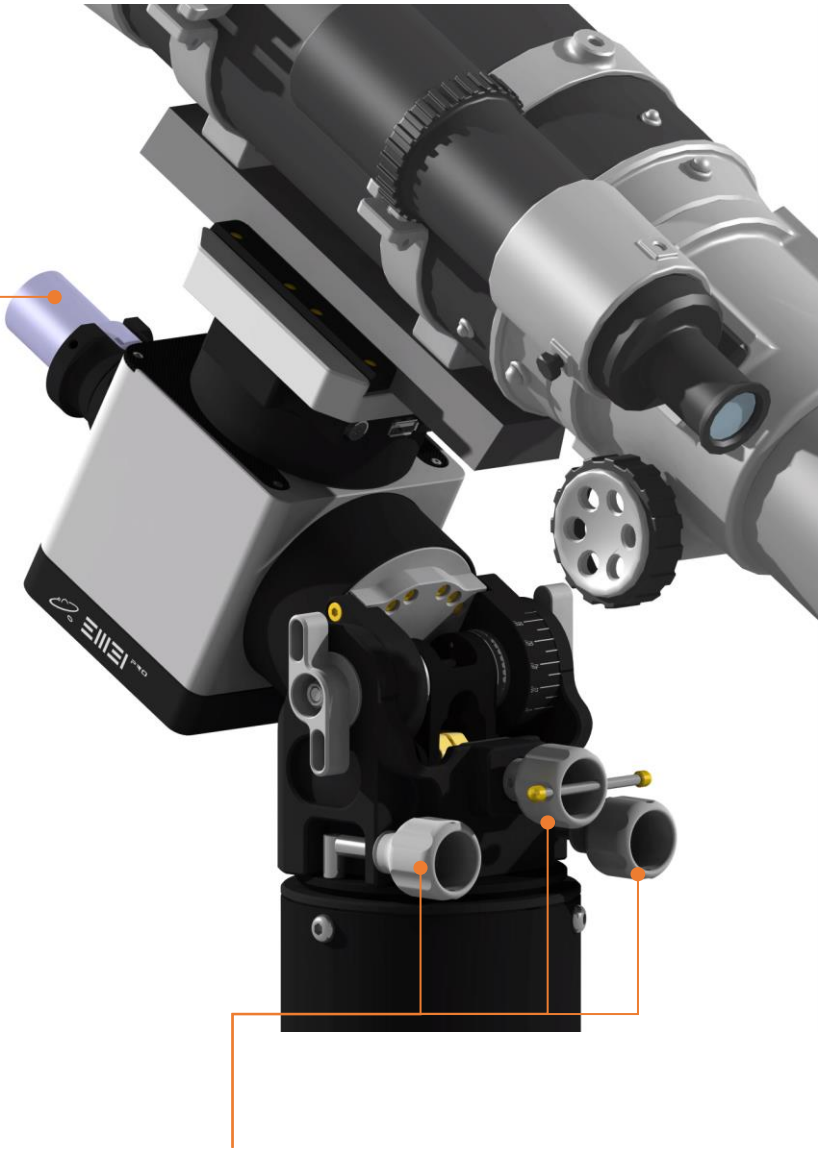

After all equipment installation is completed, precise calibration of the polar axis is completed by rotating the azimuth adjustment knob and altitude fine adjustment knob

Accessory Installation

Installation of dovetail

Dovetail

The interface on EM31 Pro DEC top plate is suitable for installation with most dovetails, users can replace the dovetail according to their needs

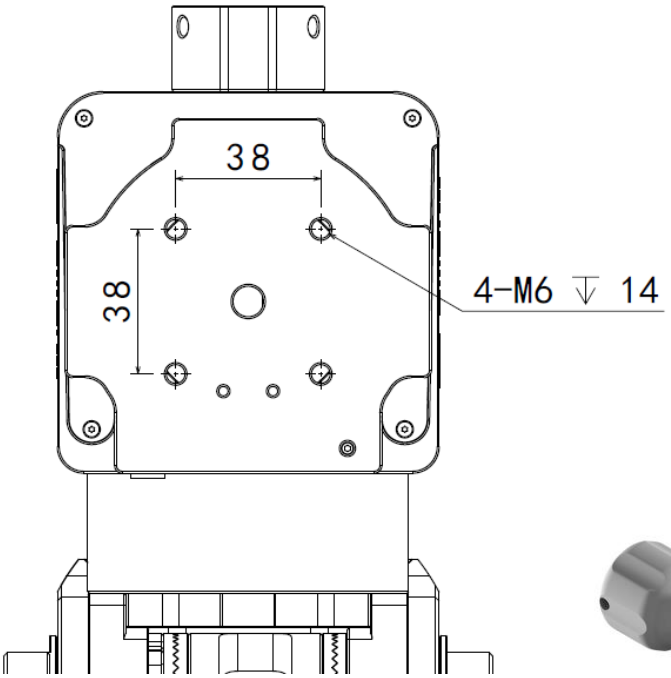

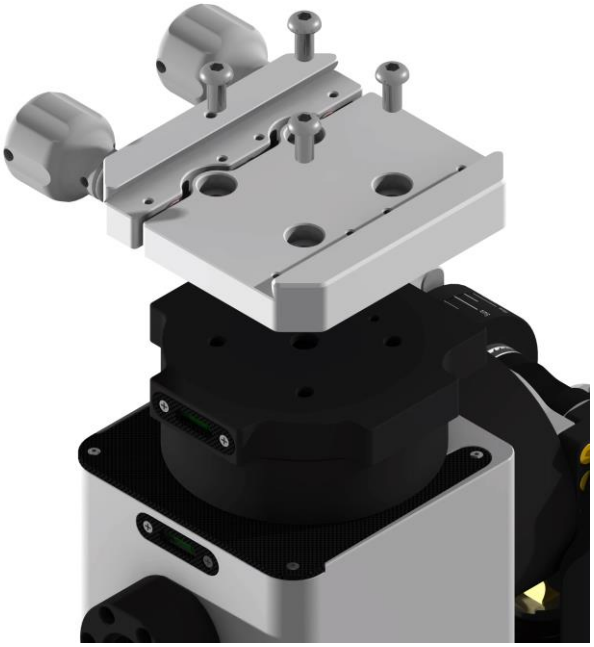

Accessory Installation

Installation of dovetail

Dovetail

EM31 Pro has a dovetail of LOSMANDY 60 °. Vixen 75 ° and Arca specifications can be achieved by installing the dovetail strips.

LOSMANDY

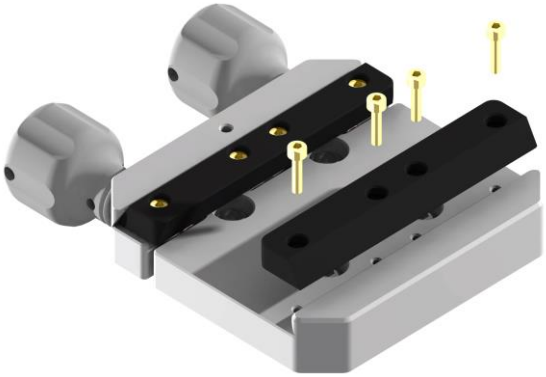

VIXEN

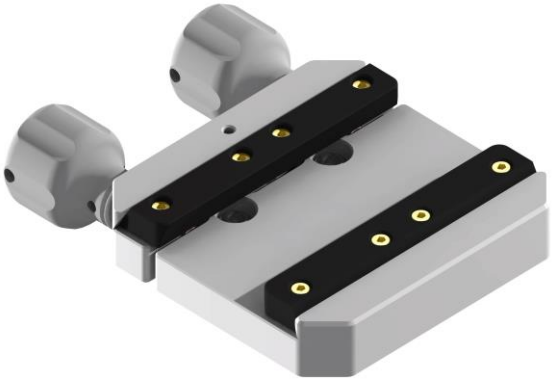

ARCA

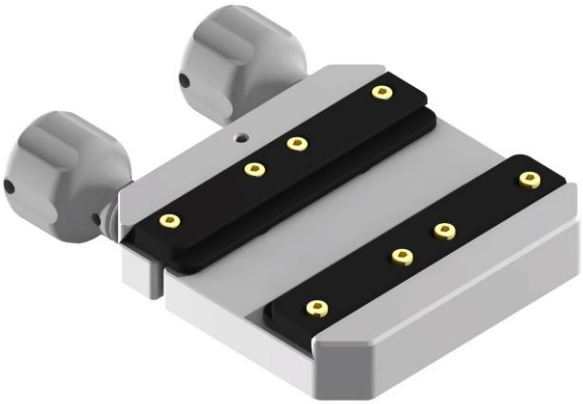

Installation and Use

Altazimuth mount

Structure Switching

The installation method of EM31 Pro pier extension and tripod in altazimuth mode is the same as that of German equatorial mount. It is necessary to adjust the altitude angle to 90 degree, and the adjustment method is same as that of the German equatorial mount.

Installation and Use

Altazimuth mount

Installation of telescope

Confirm that the installation direction of the telescope is consistent with the direction marked on the bottom of the body

Installation and Use

Altazimuth mount

Horizontal calibration

The prerequisite for achieving accurate goto and stable tracking in altazimuth mode is that the azimuth rotation axis is perpendicular to the ground. EM31 Pro can confirm the status through the RA axis horizontal bubble

Installation and Use

Altazimuth mount

Horizontal calibration

When using the AD120 horizontal adjuster, the horizontal state can be adjusted by adjusting the horizontal adjusters

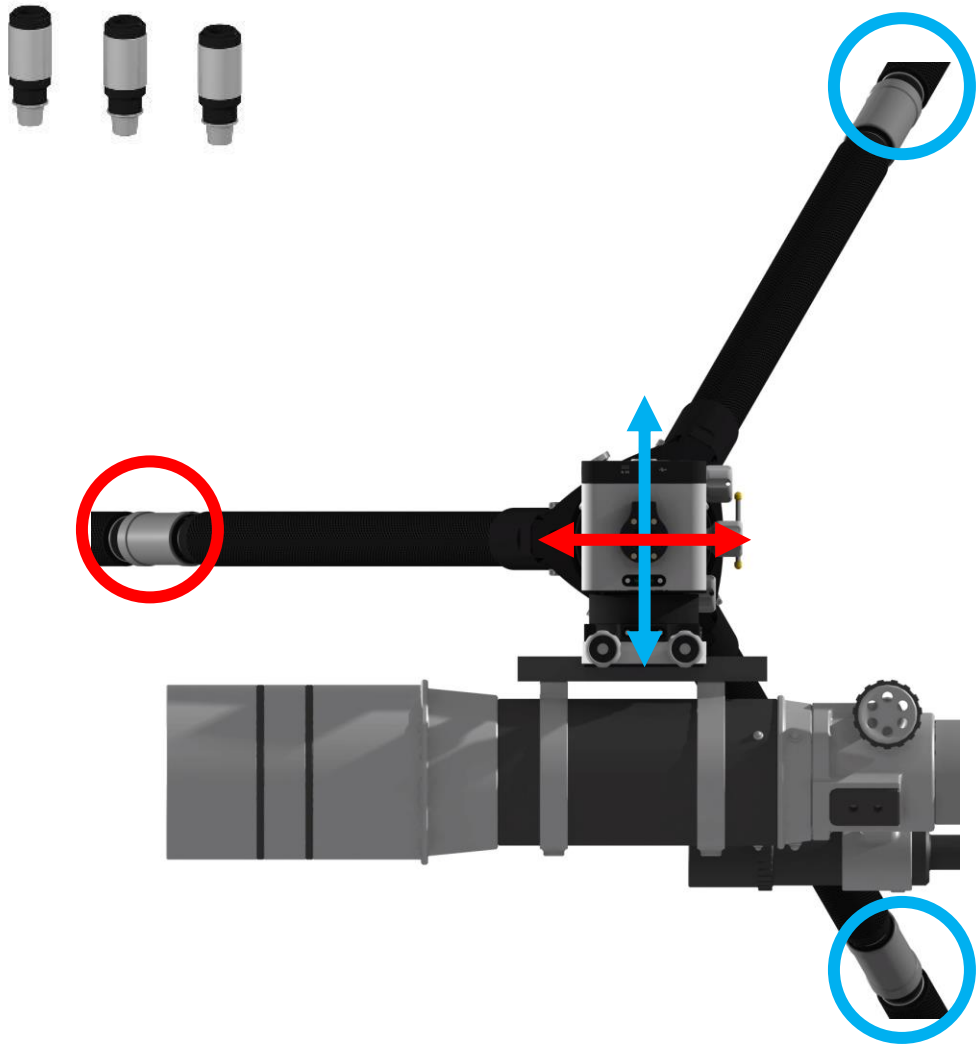

⚠ All equipment need to be installed before starting to adjust the horizontal state

Installation and Use

Altazimuth mount

Horizontal calibration

Obtain accurate horizontal state

Power on the equatorial mount and manually rotate the RA axis to make the horizontal bubble parallel to the blue horizontal adjuster line shown in the diagram

Adjust the two horizontal adjusters inside the blue circles until the horizontal bubble is centered

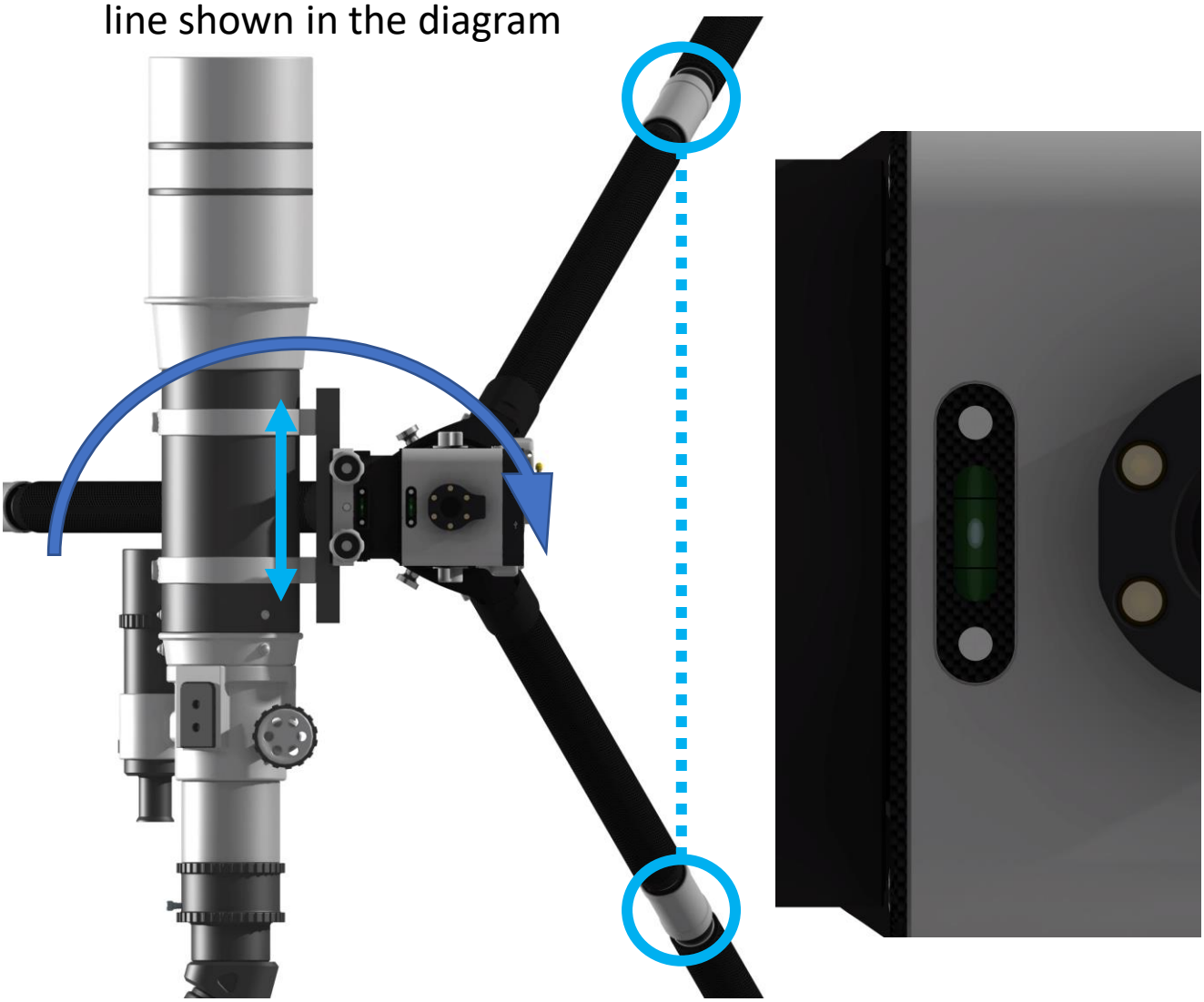

Installation and Use

Altazimuth mount

Horizontal calibration

Obtain accurate horizontal state

Power on the equatorial mount and manually rotate the RA axis so that the horizontal bubble is parallel to the red dashed line in the diagram

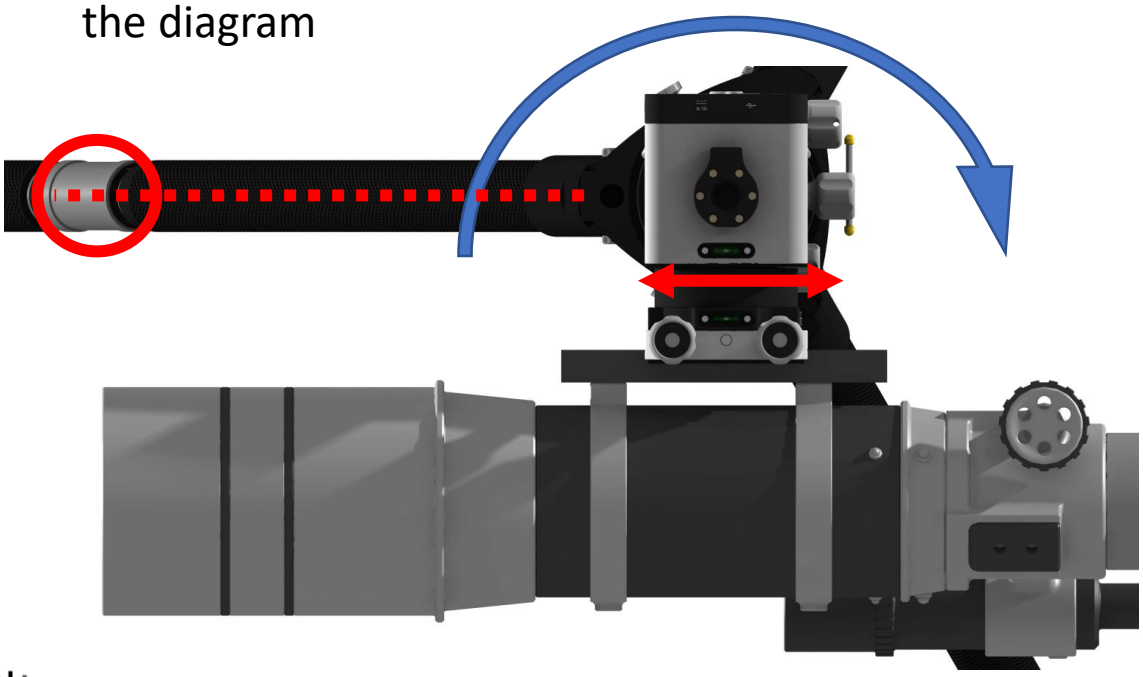

Adjust the horizontal adjuster inside the red circle until the horizontal bubble is centered, and then the horizontal adjustment is completed

Installation and Use

Altazimuth mount-top mode

Structure Switching

EM31 Pro can switch to altazimuth mount top mode by installing a supporting bracket on top

Installation and Use

Altazimuth mount-top mode

top mode supporting bracket structure

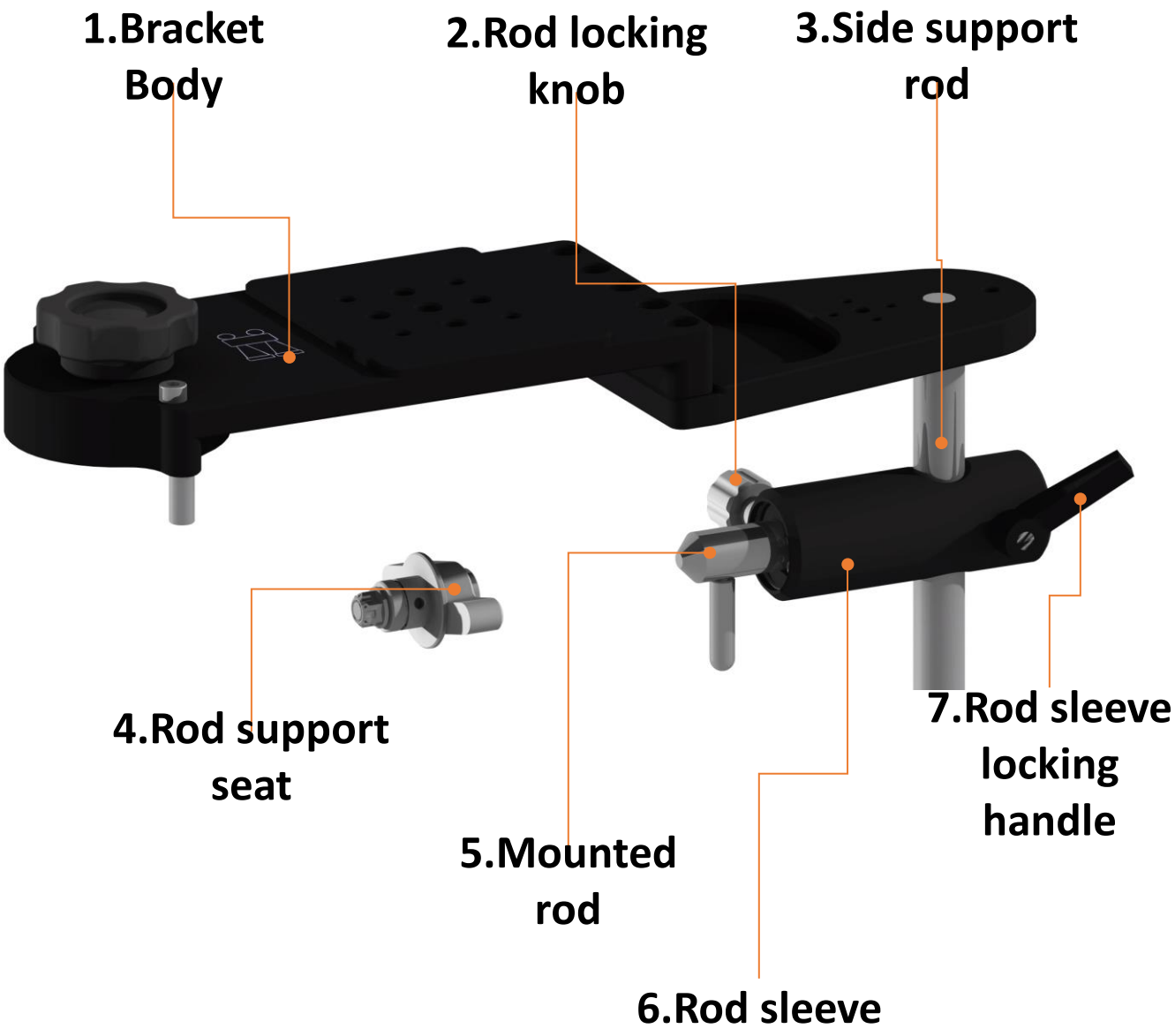

Installation and Use

Altazimuth mount-top mode

Structure Switching

The supporting bracket interface is suitable for installation with most dovetails

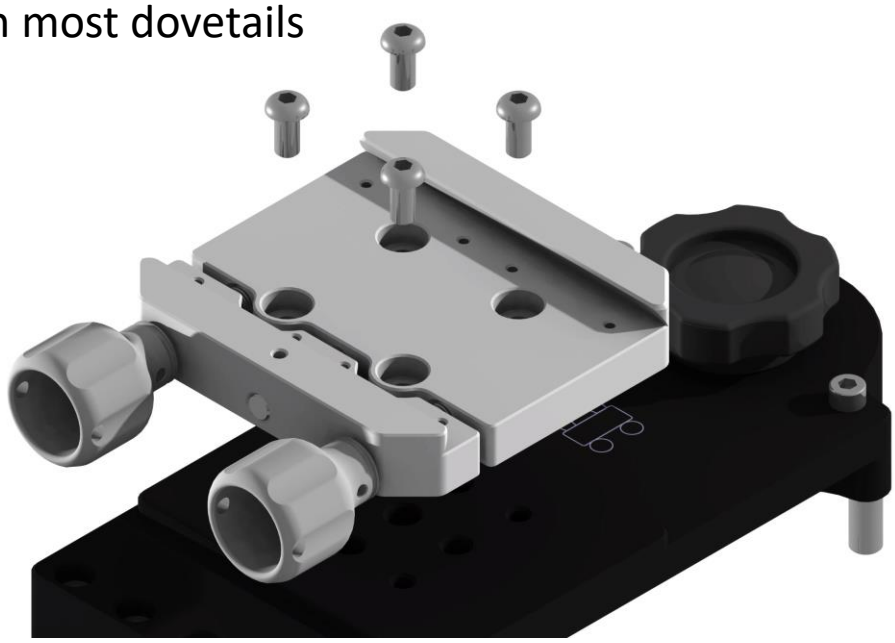

⚠

Note the installation direction of the dovetail slot knob, as illustrated

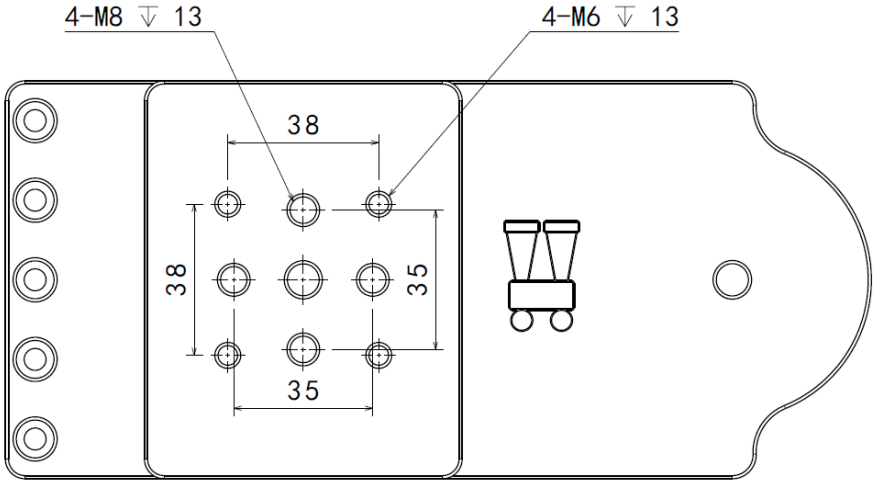

⚠ The top mode supporting bracket does not come with a dovetail, you can use the dovetail on the body or choose your own.

Installation and Use

Altazimuth mount-top mode

Structure Switching

Replace the dovetail on the equatorial mount body with an supporting bracket connecting adapter and adjust the altitude angle to 0 degrees

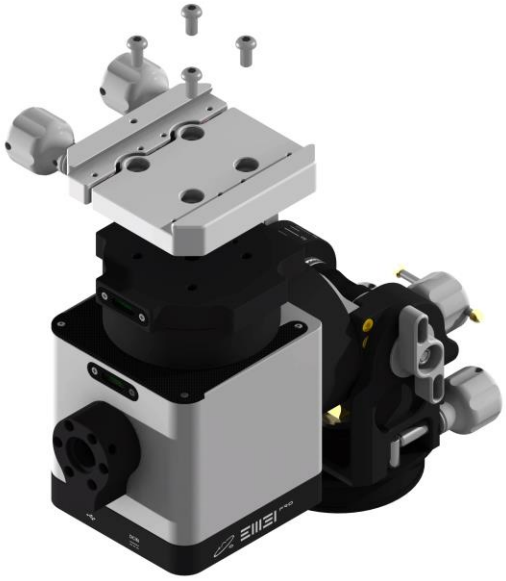

Installation and Use

Altazimuth mount-top mode

Structure Switching

Invert the body of the Equatorial mount and install it with the pier extension and tripod in the same way as in the German Equatorial mount mode

Installation and Use

Altazimuth mount-top mode

Structure Switching

Insert the supporting bracket into the equatorial mount body base and rotate the knob clockwise until it locks, and rotate the Rob support seat(4) clockwise until it reaches the bottom but do not lock it tightly

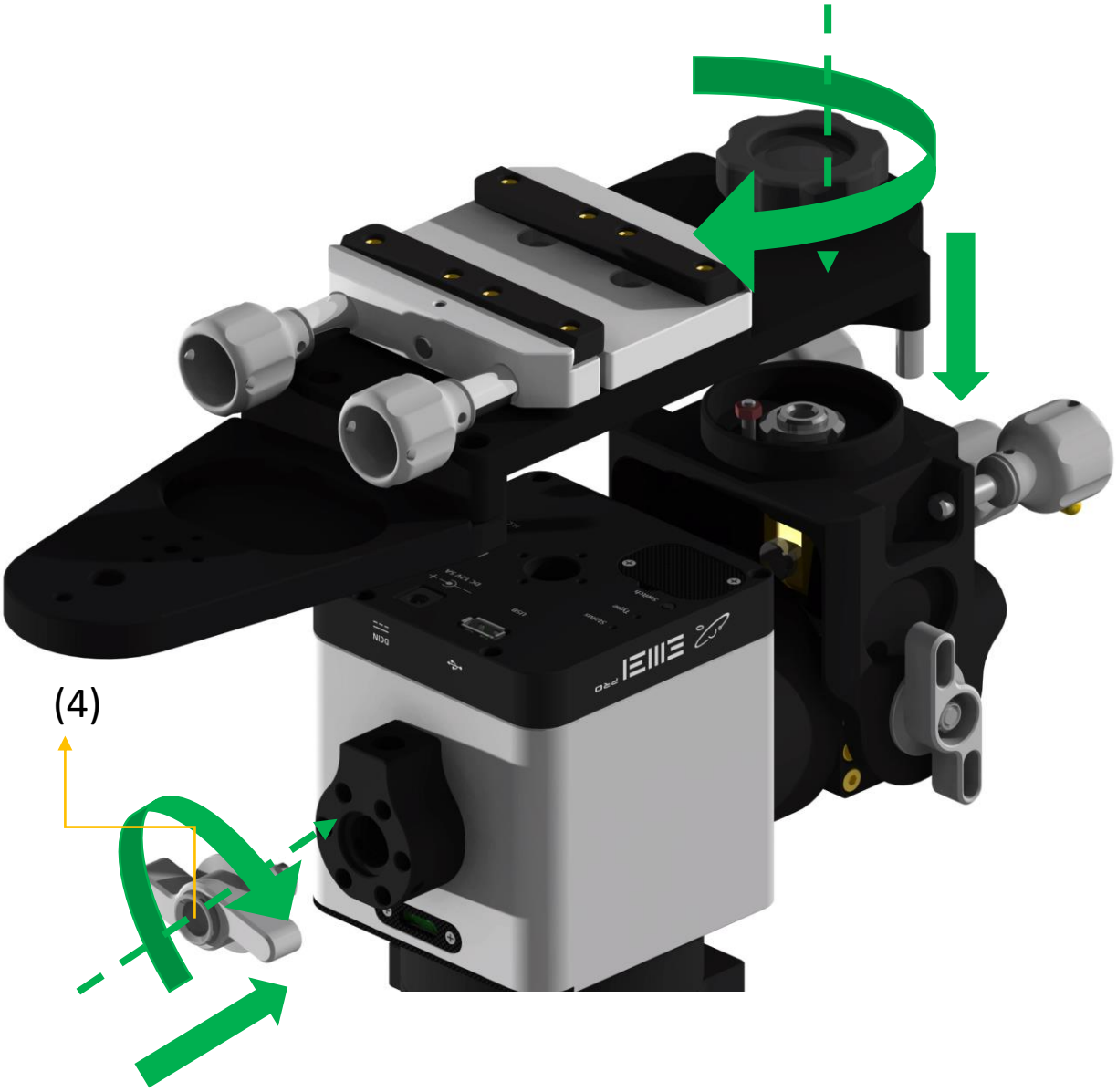

Installation and Use

Altazimuth mount-top mode

Structure Switching

Adjust the altitude fine adjustment knob so that the lower edge of the upper mounting bracket is parallel to the edge of the bottom shell of the equatorial mount body

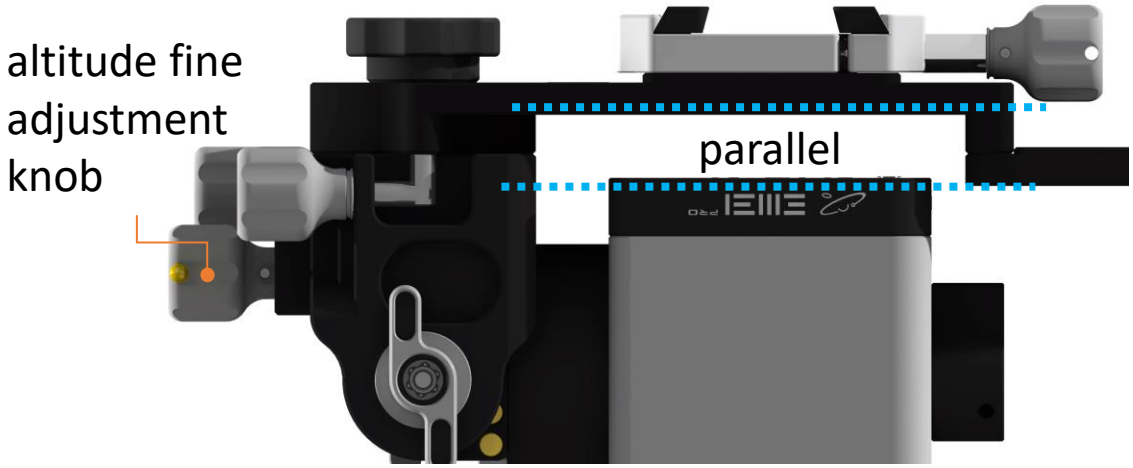

Adjust the azimuth knob so that the side edge of the upper bracket is parallel to the edge of the bottom cover of the mount body

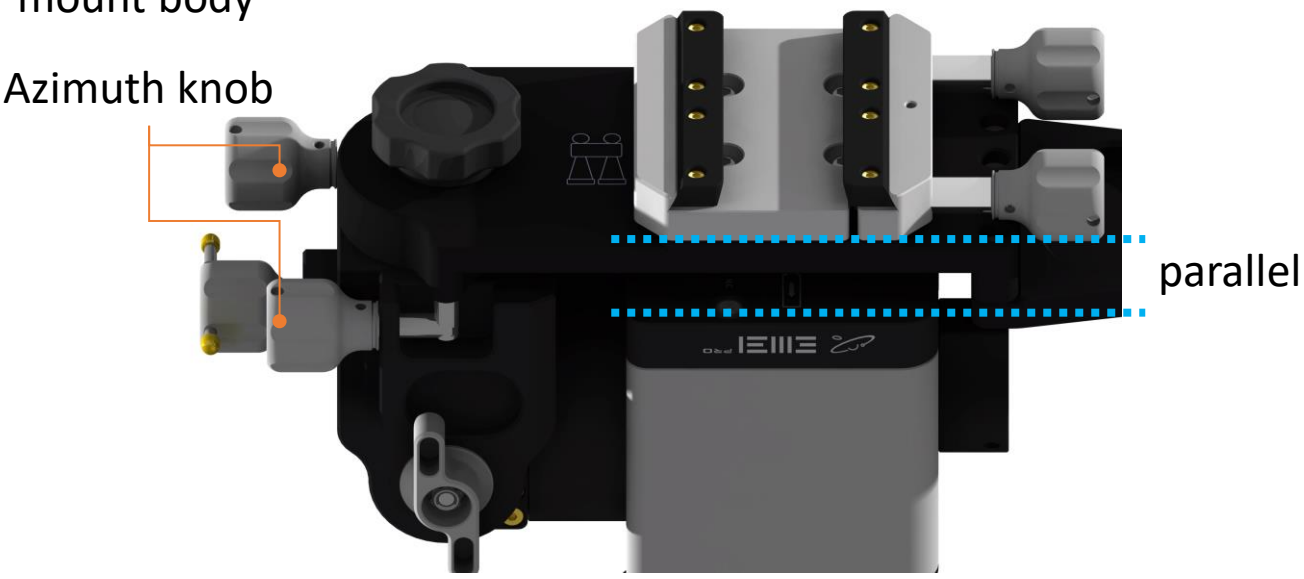

Boundary parallelism can be judged by adjusting the perspective observation

Installation and Use

Altazimuth mount-top mode

Structure Switching

Clockwise into the Side support rod

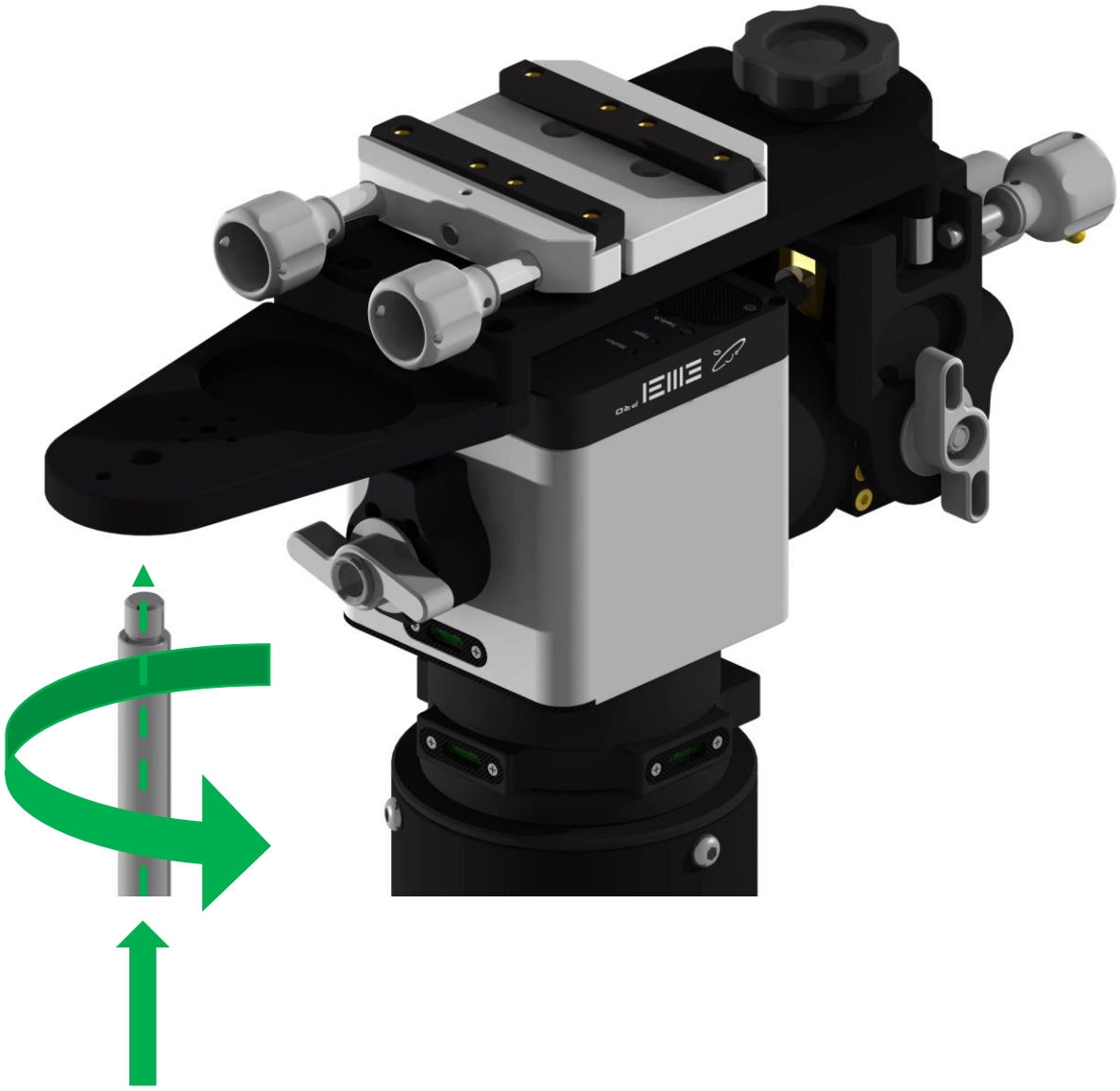

Installation and Use

Altazimuth mount-top mode

Structure Switching

Turn the Mounted rod(5) into the Side support rod(3), and rotate the Rod sleeve locking handle(7) clockwise to lock it. After locking, hold the Mounted rod(5) tightly and rotate it clockwise to lock the Side support rod(3) again

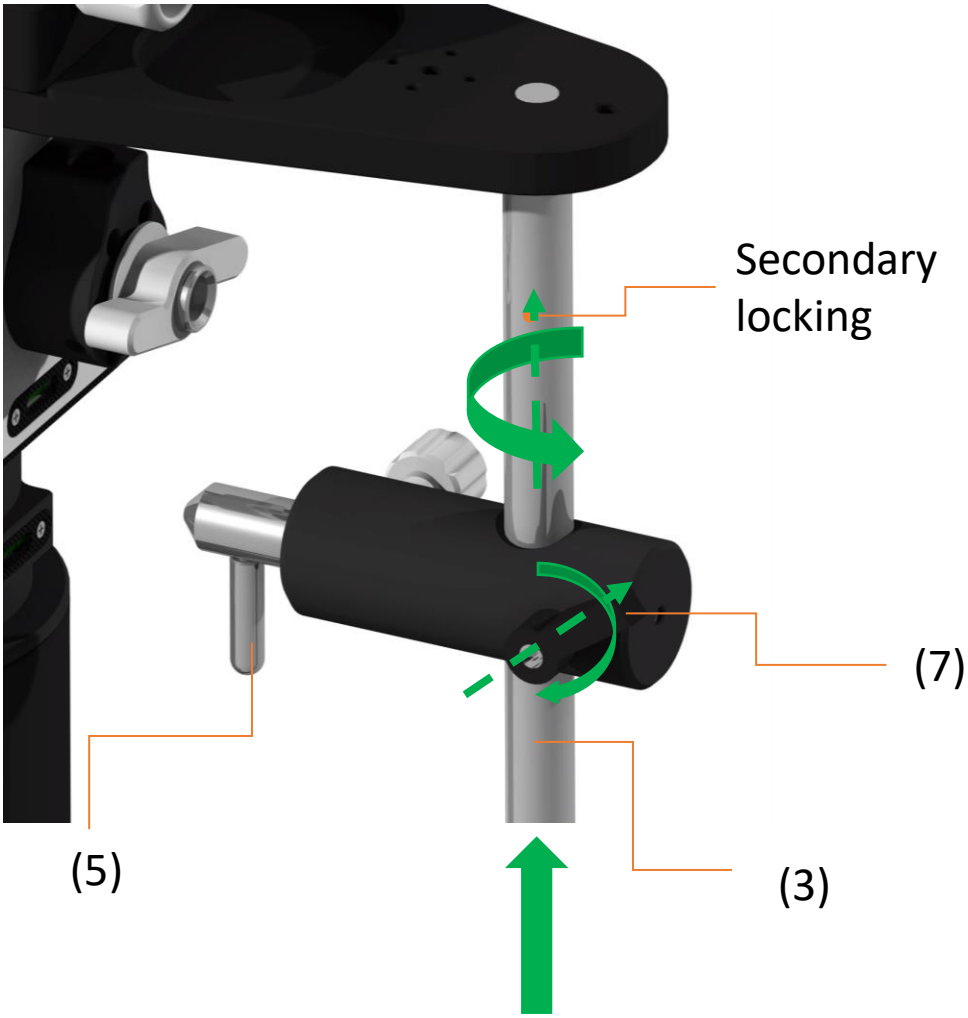

Installation and Use

Altazimuth mount-top mode

Structure Switching

Loosen the Rod sleeve locking handle(7) counterclockwise and press the Mounted rod(5), while aligning the Mounted rod(5) with the Rod support seat(4) and releasing the Mounted rod(5)

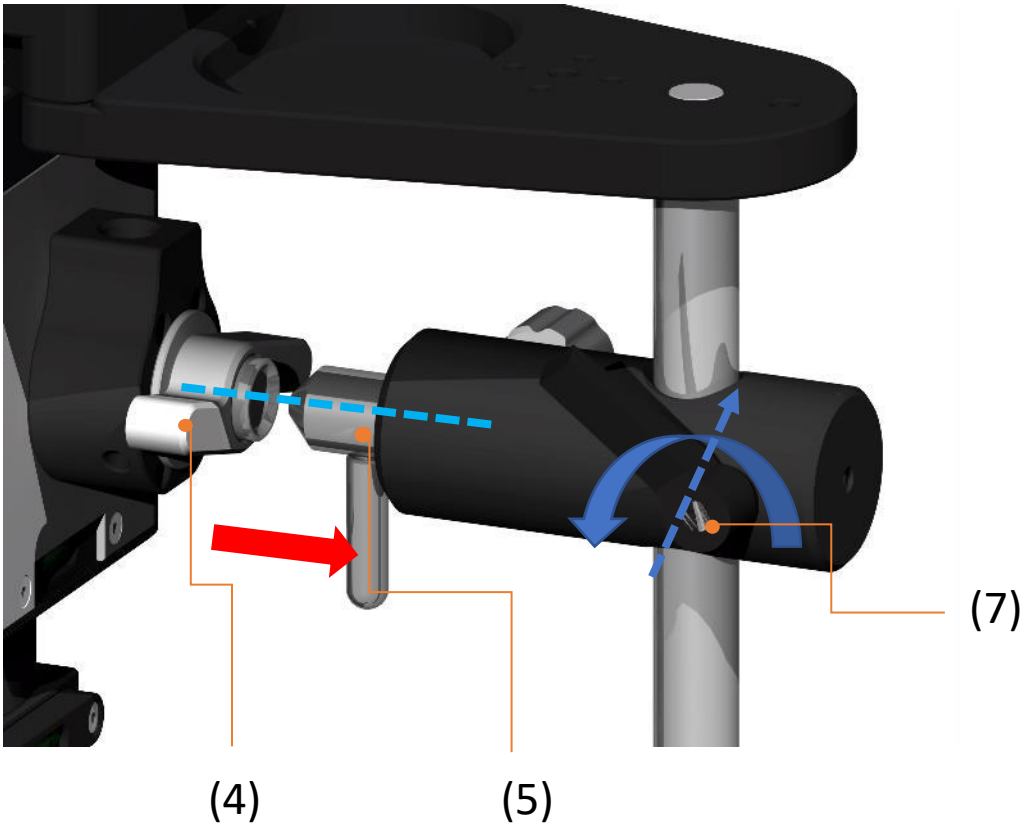

Installation and Use

Altazimuth mount-top mode

Structure Switching

Rotate the Rod sleeve locking handle(7) and Rod locking knob(2) clockwise
Rotate Rod support seat(4) counterclockwise half a turn to one turn to fully lock the Mounted rod(5) and complete the installation of the top mode supporting bracket

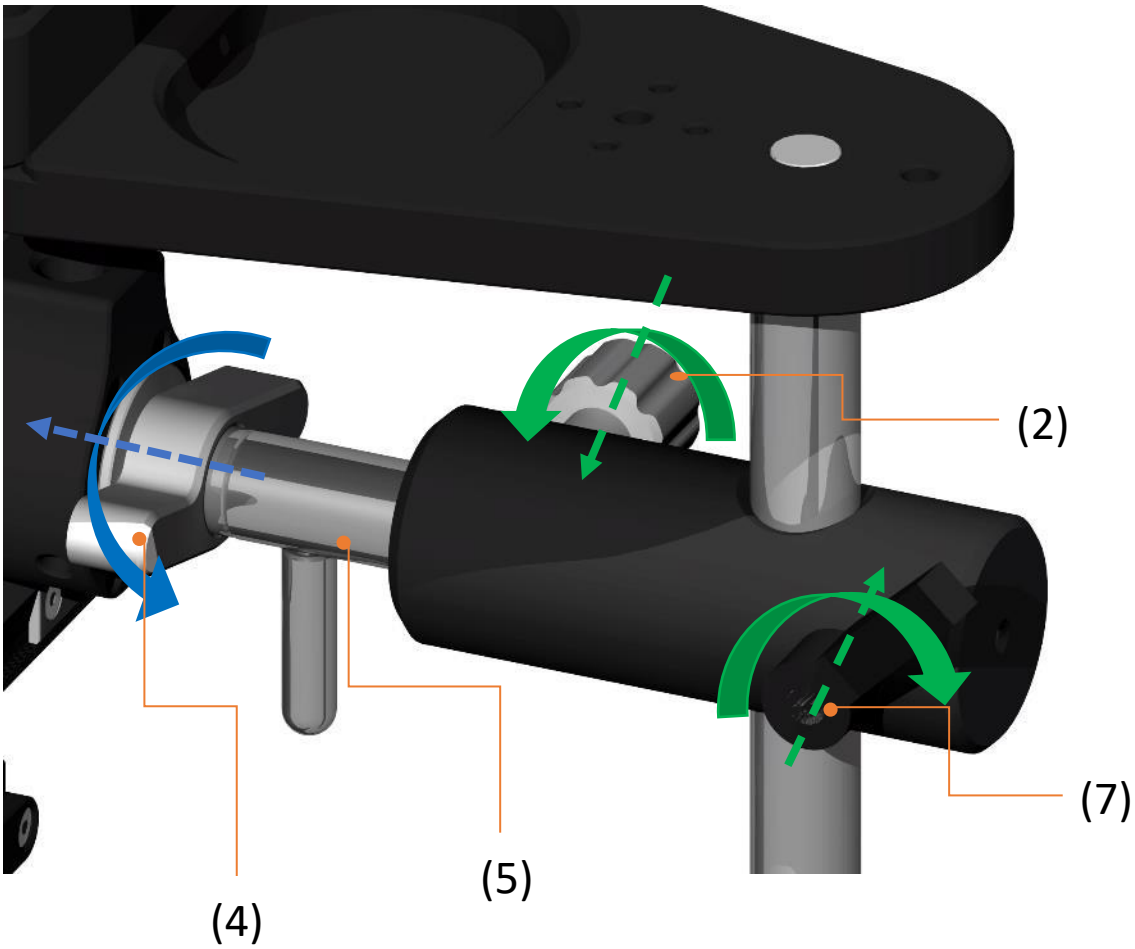

Installation and Use

Altazimuth mount-top mode

Telescope installation

Install the telescope into the upper dovetail, ensuring that the installation direction of the telescope is consistent with the direction marked on the top mode supporting bracket

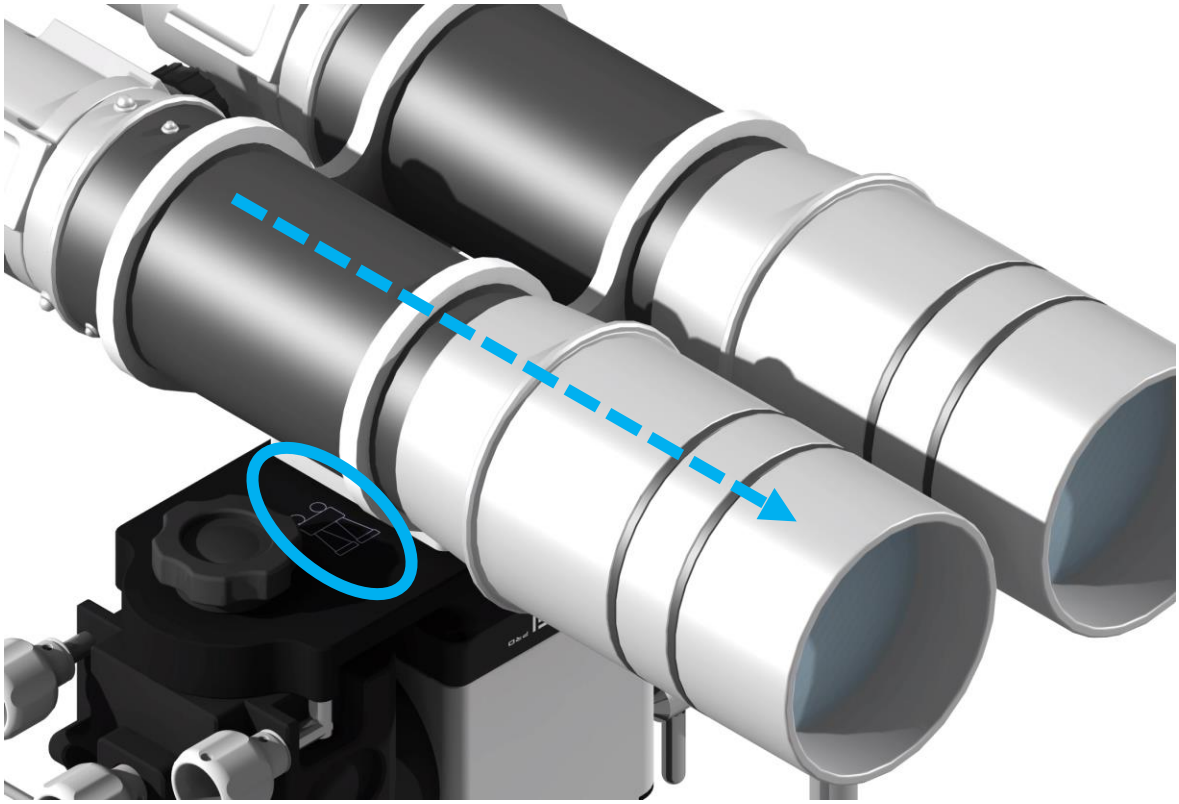

Installation and Use

Altazimuth mount-top mode

Level adjustment

The top mode is Altazimuth mode, it is necessary to adjust the horizontal state. Accurate horizontal state can be obtained through horizontal bubbles on the DEC axis

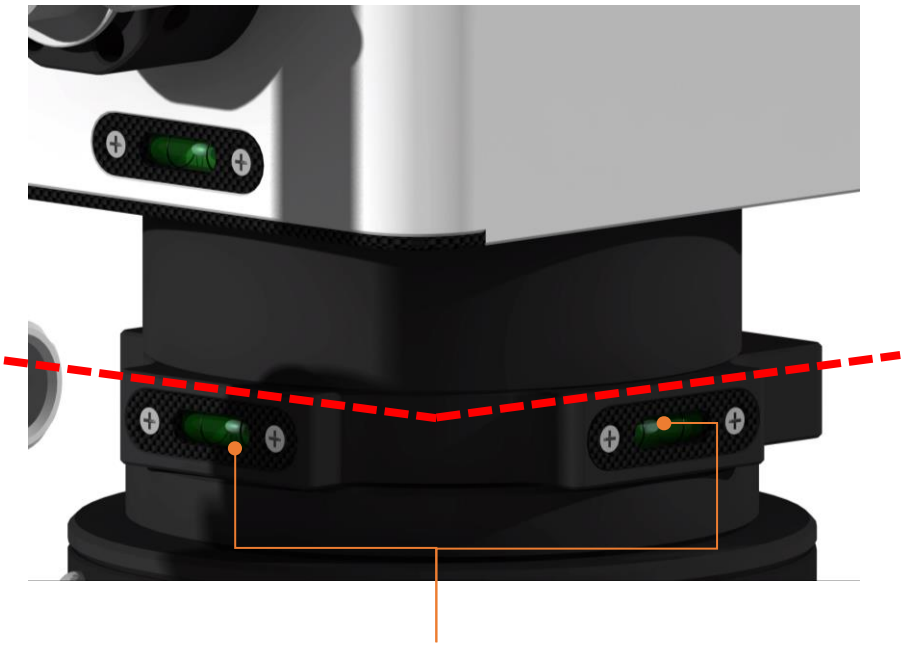

DEC axis level bubble

Complete the horizontal adjustment by adjusting the horizontal adjuster installed on the tripod, using the same method in the same way as the Altazimuth side mounted mode

Installation and Use

Cable connection

Cable connection

EM31 Pro has two sets of cable connections, one on the bottom of the body, the other on the DEC rotation axis, both are identical in function

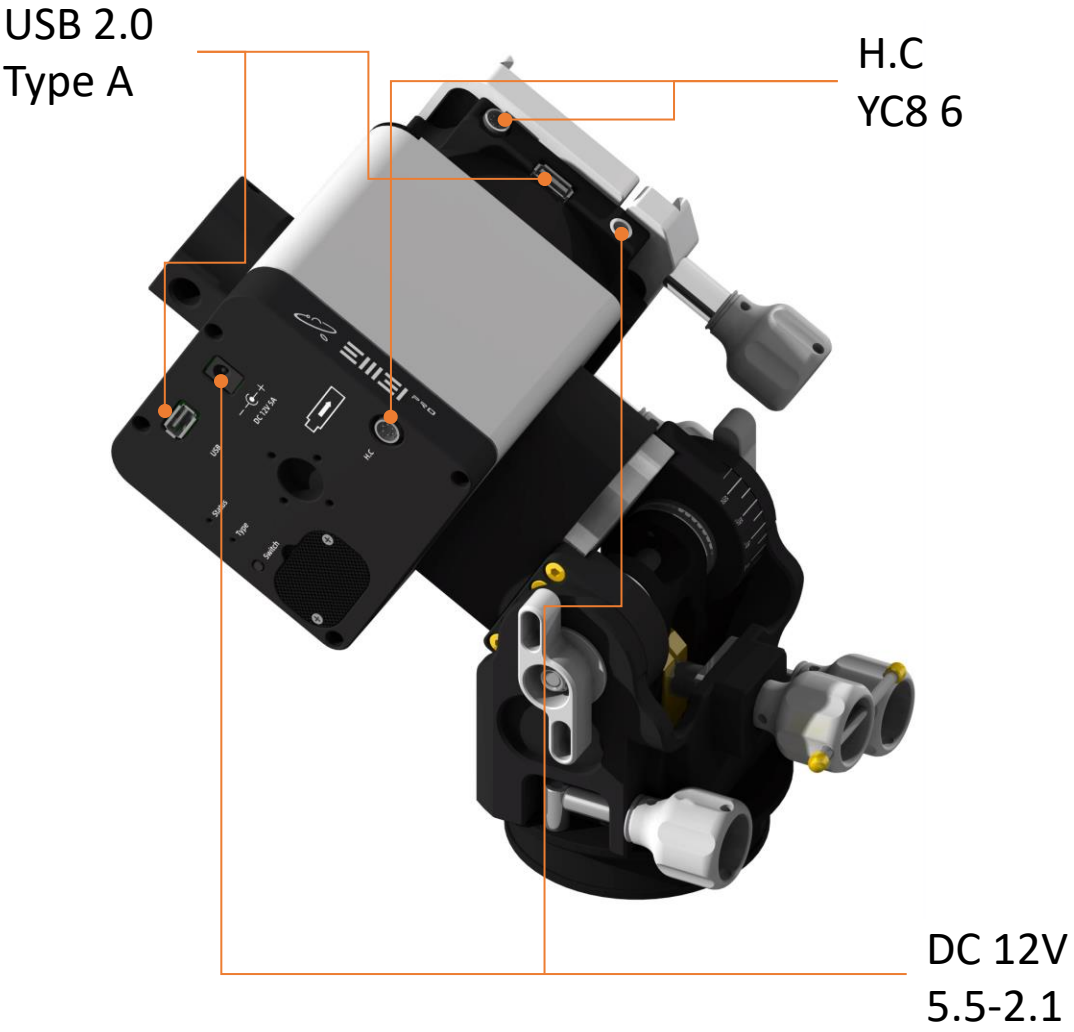

Prohibit simultaneous connection of two power sources
Prohibit simultaneous access to two controllers
Prohibit simultaneous access to two astronomical controller (any PC, astronomical box, mini PC)

Installation and Use

Cable connection

Power connection method

There are two DC 12v connector in the body of EM31 Pro Any connector can be used as a power input, and the other connector can be used as a power output to supply power to other astronomical devices.

For astrophotography, it is recommended to use the bottom connector of the body as the power input and the DEC axis connector as the output connector

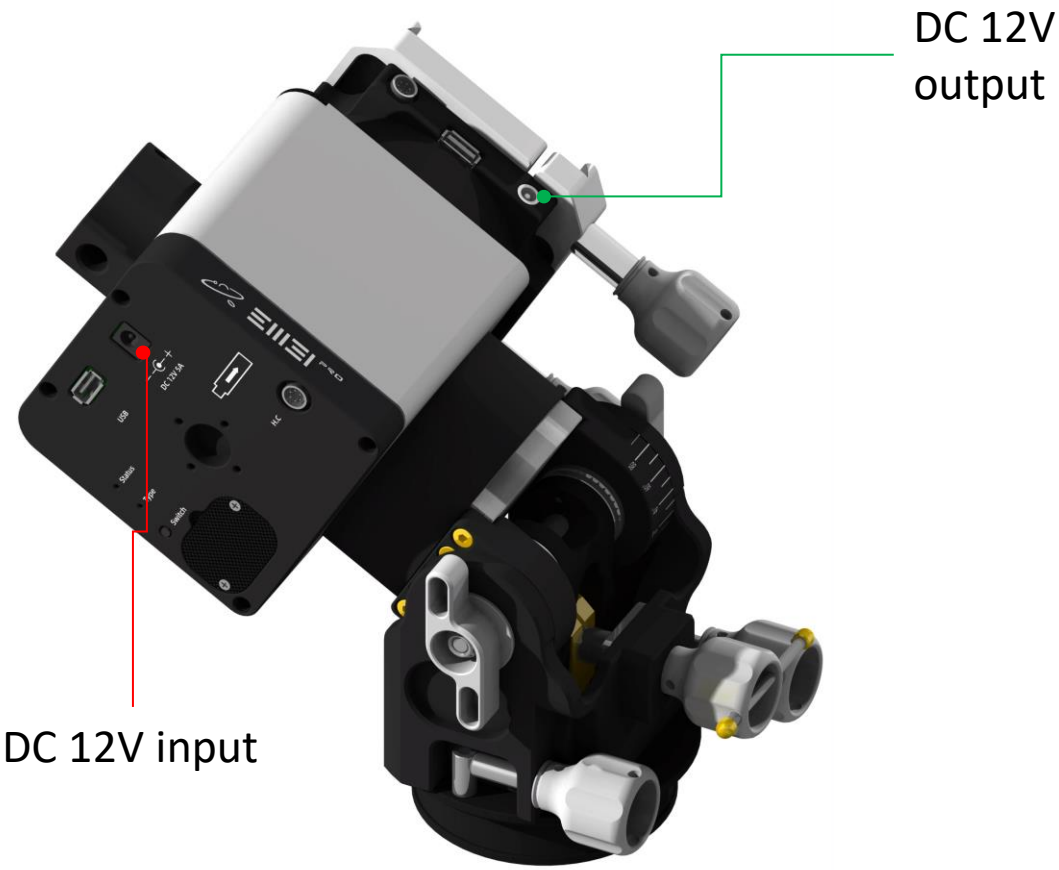

Prohibit simultaneous access to two power supplies, the output connector device load shall not exceed 12v 5A

When only the equatorial mount is used, it is recommended to use DC 12V 2A or more power supply. When other equipment is used, it is recommended to use DC 12V 5A or more power supply. The power output interface can provide 5A stable current.

Installation and Use

Cable connection

USB cable connection method

EM31 Pro has two USB interfaces, each of which can be connected to the equatorial mount and the host computer (PC, astronomical box, mini PC).

For astrophotography, it is recommended to use the DEC axis interface to connect the astronomical box or PC. At this point, the USB and power output cables can rotate synchronously with the telescope, effectively preventing cable entanglement

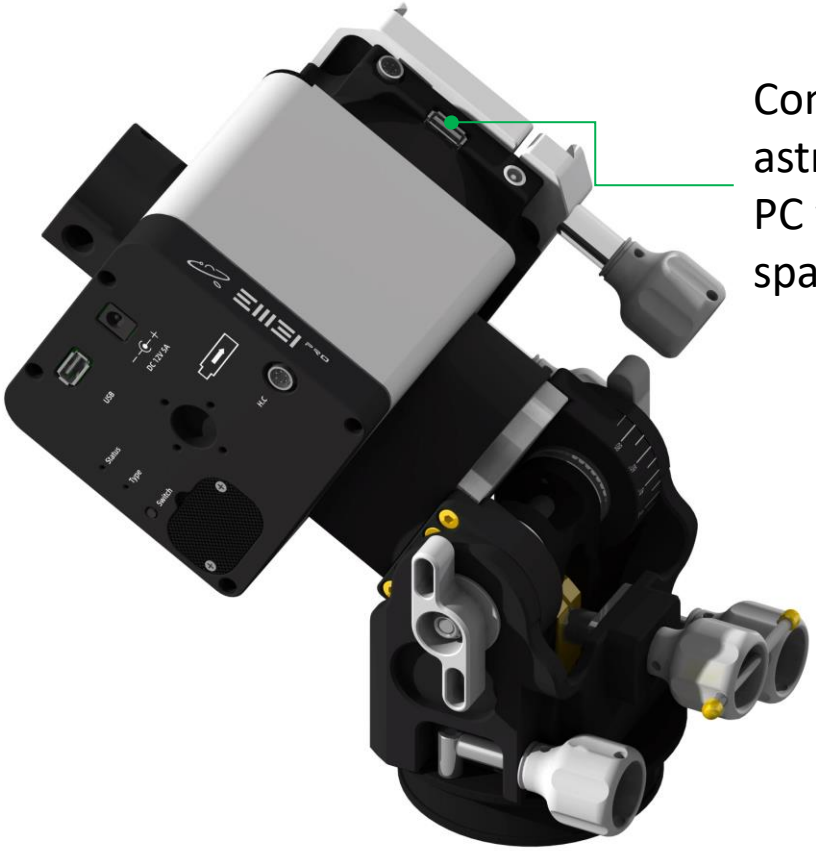

Prohibit connecting devices other than PCs, Astro Boxes, and Astro Industrial Controls.
Prohibit connecting the equatorial mount through any USB hub

Installation and Use

Cable connection

Handle connection

EM31 Pro has two USB interfaces, each of which can be connected to the equatorial mount and the host computer (PC, astronomical box, mini PC).

Handle connected to body bottom in the modes of German equatorial m and Altazimuth moun

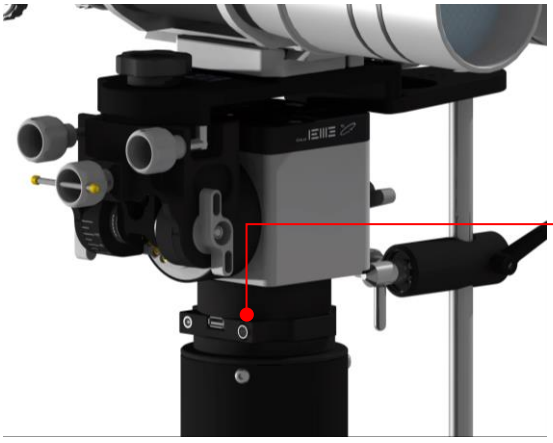

Handle connected to DEC axis cable management in Altazimuth top mode

---

⊘ **Prohibit connecting two handle controllers simultaneously**
Prohibit the plugging and unplugging of the handle controller in the charged state of the equatorial mount

Installation and Use

Mode selection

Mode selection

EM31 Pro mode selection indicated by the “Type” light，**Blue is Altazimuth Mount side mode**， **Red is Altazimuth Mount top mode, Light out for German equatorial mount**

Wait for 5 seconds when the Equatorial mount is powered on, and enter mode switching after the Status light flashes off

By clicking the Switch button, the Type light will begin to change, blue-red-off, and the Type light will be switched once per key press, which can be switched cyclically.

After confirming the required mode, wait for 10 seconds, the Status light will remain on after flashing, and the mode switch is complete

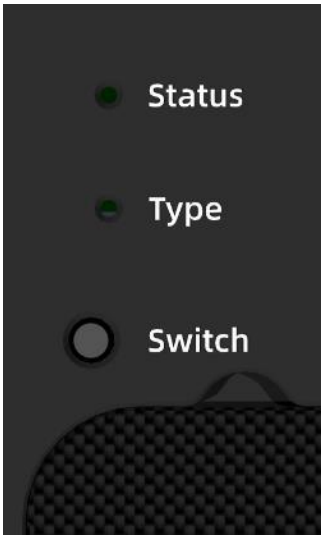

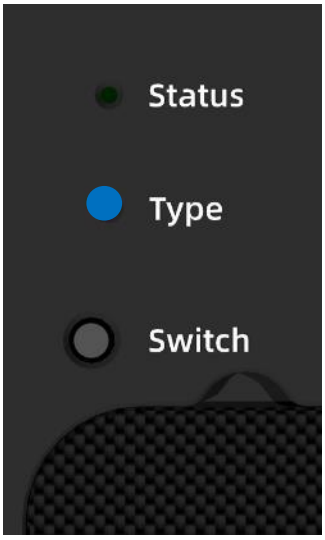

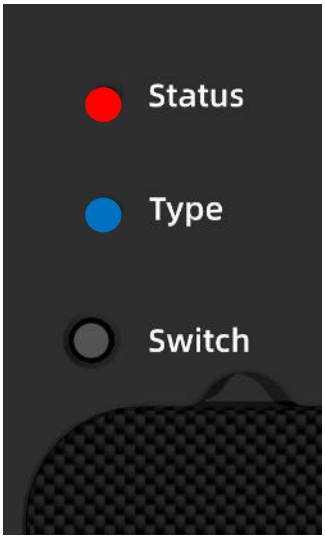

⚠ When the mount is in operation, the Status light will be on constantly and will start flashing when tracking is turned on

Accessory Installation

Adapter Mount for electronic polar alignment scope

The electronic polar scope can be connected to EM31Pro via an adapter mount.

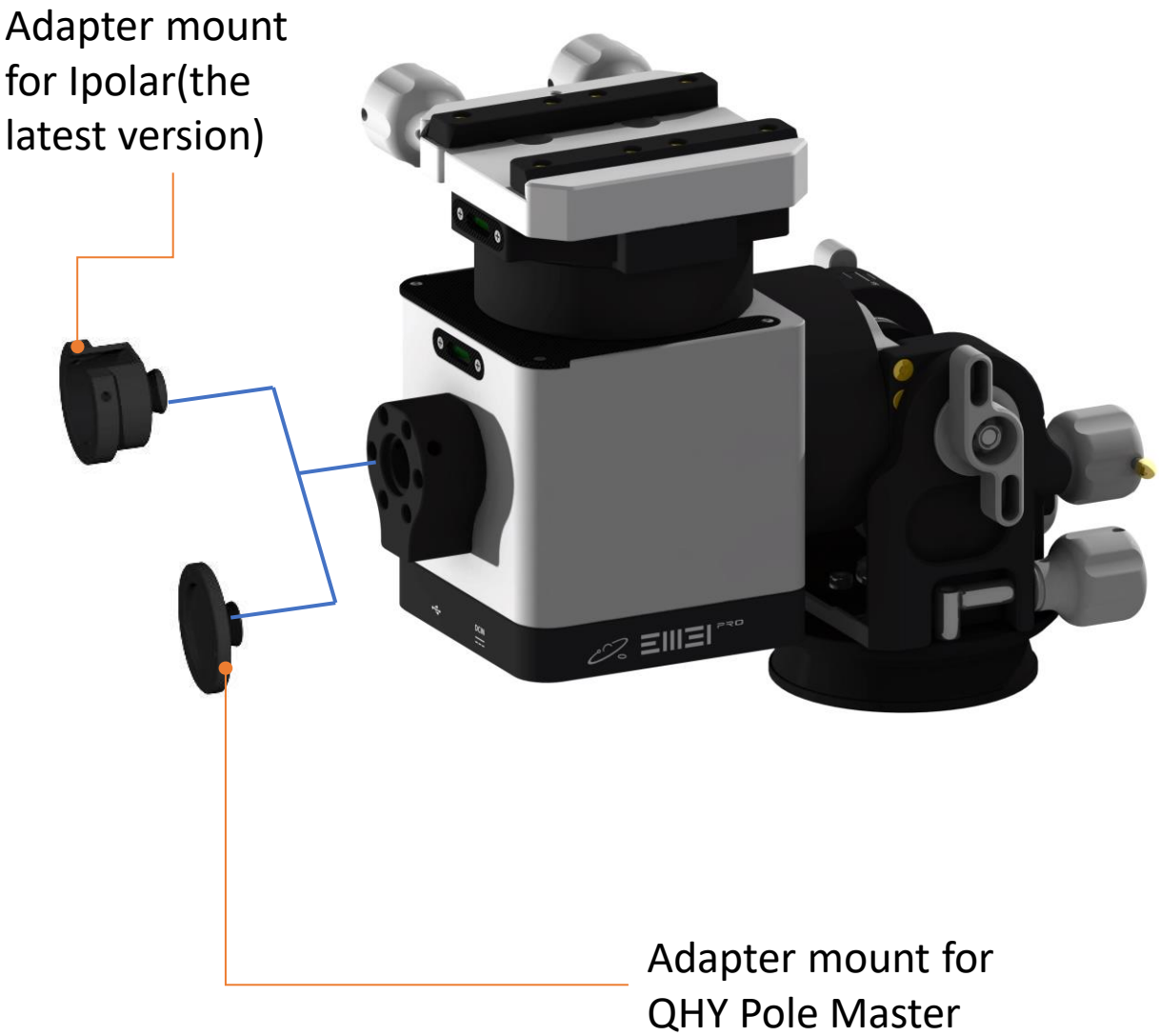

Accessory Installation

Ball head mount

EM31 Pro can install a DSLR gimbal through the Ball head mount

3/8 16 bolts

Battery Installation

Install and replace the battery

Battery replacement

Battery model CR1220

Do not replace batteries while powered on

Onstep Quick Start Guide

Onstep guide

Users can set and control the Equatorial mount through Android Onstep APP or webpage

IOS system cannot use APP， webpage is workable

Search for WIFI hotspot Onstep connection through PC or mobile phone, password: password

Enter "192.168.0.1:9999" or "192.168.0.1" into the browser

Onstep Quick Start Guide

Onstep guide

When using the Equatorial mount for the first time or changing the address, you need to set the longitude and latitude coordinates and local time of the Equatorial mount (can be synchronized through NINA or the Asiair)

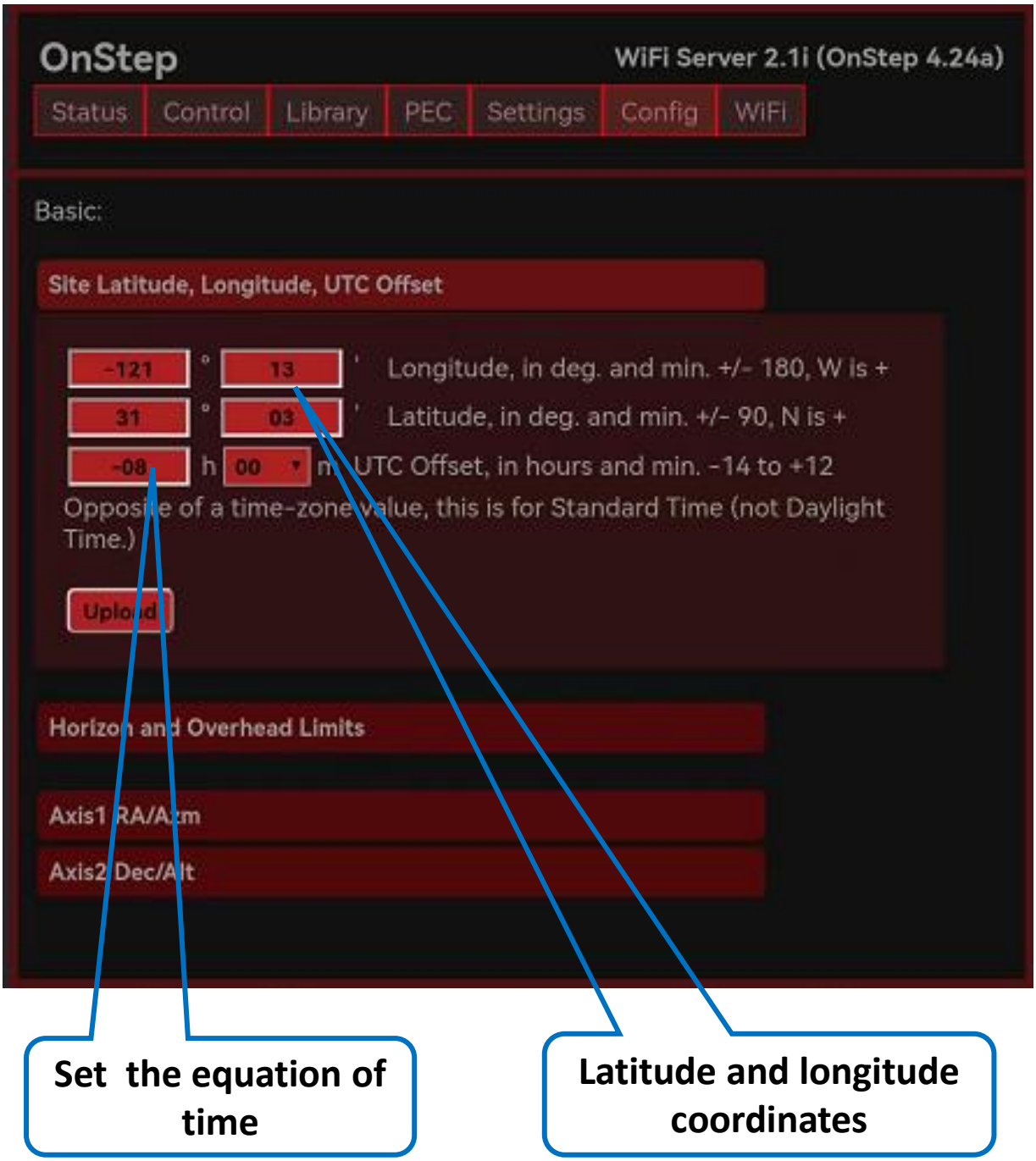

Onstep Quick Start Guide

Onstep guide

set time

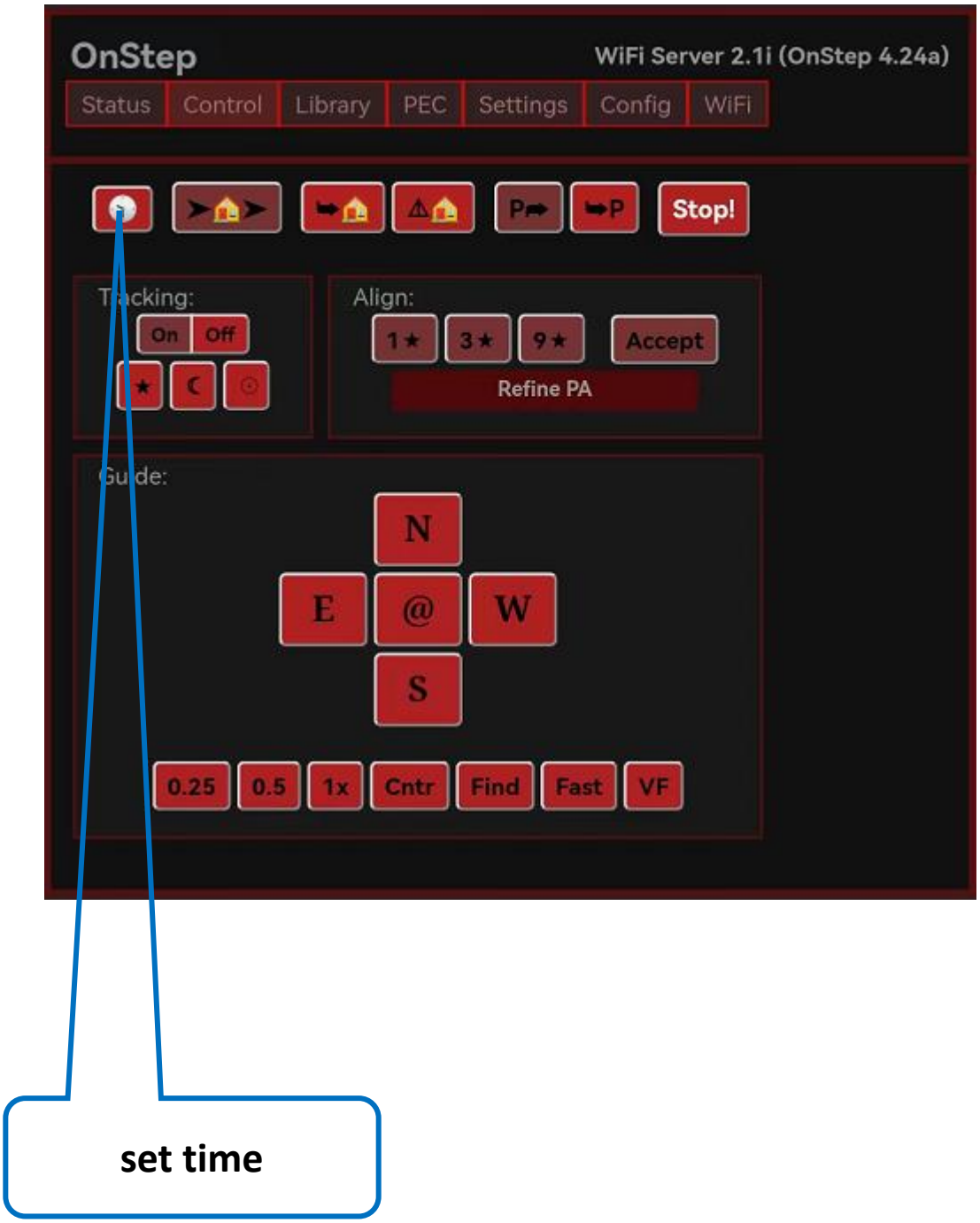

Onstep Quick Start Guide

Onstep guide

Start Tracking

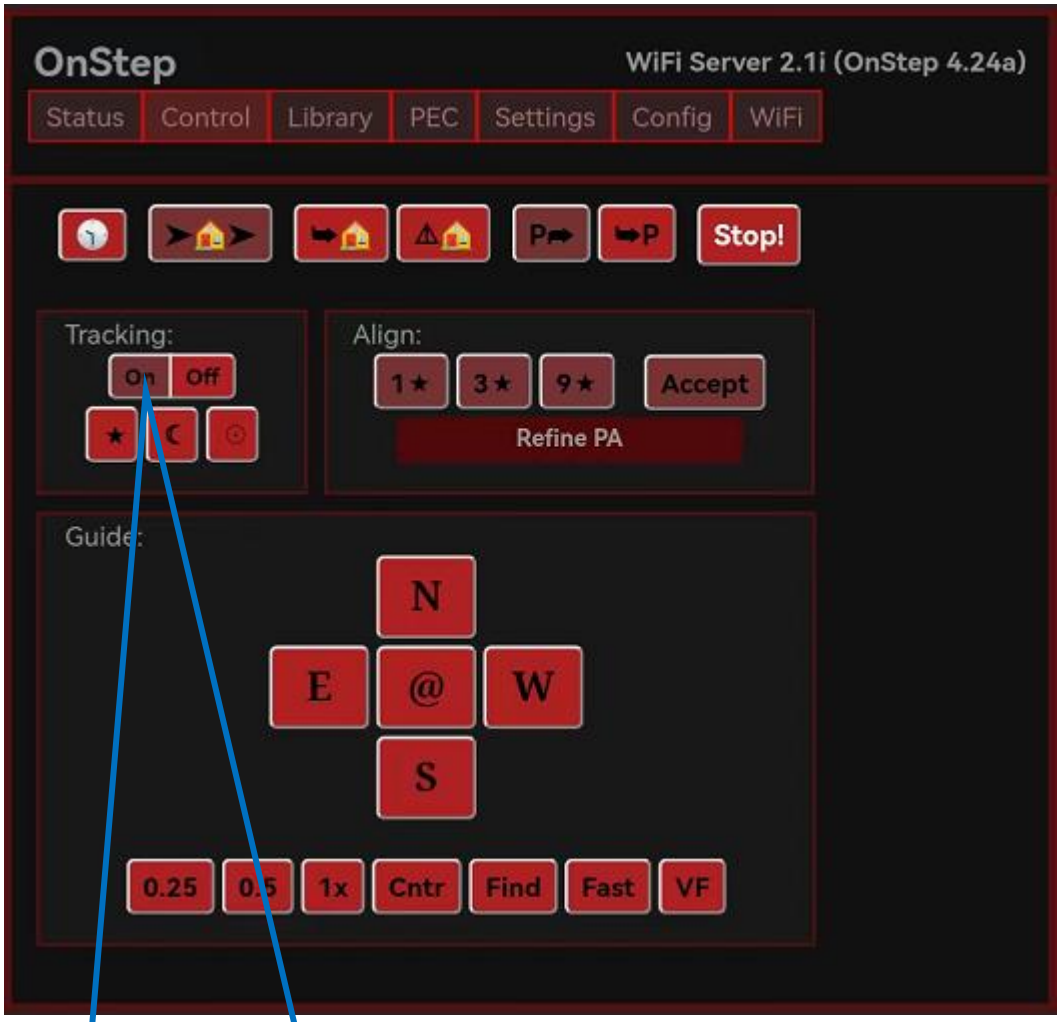

Turn on Tracking, and the rotation of the equatorial mount can be controlled by operating the direction keys.

⚠ **Onstep system option, gray indicates ON status**

Onstep Quick Start Guide

Onstep guide

⚠ **The physical zero position is different in the three modes of EM31 pro, so it needs to be set before using the equipment**

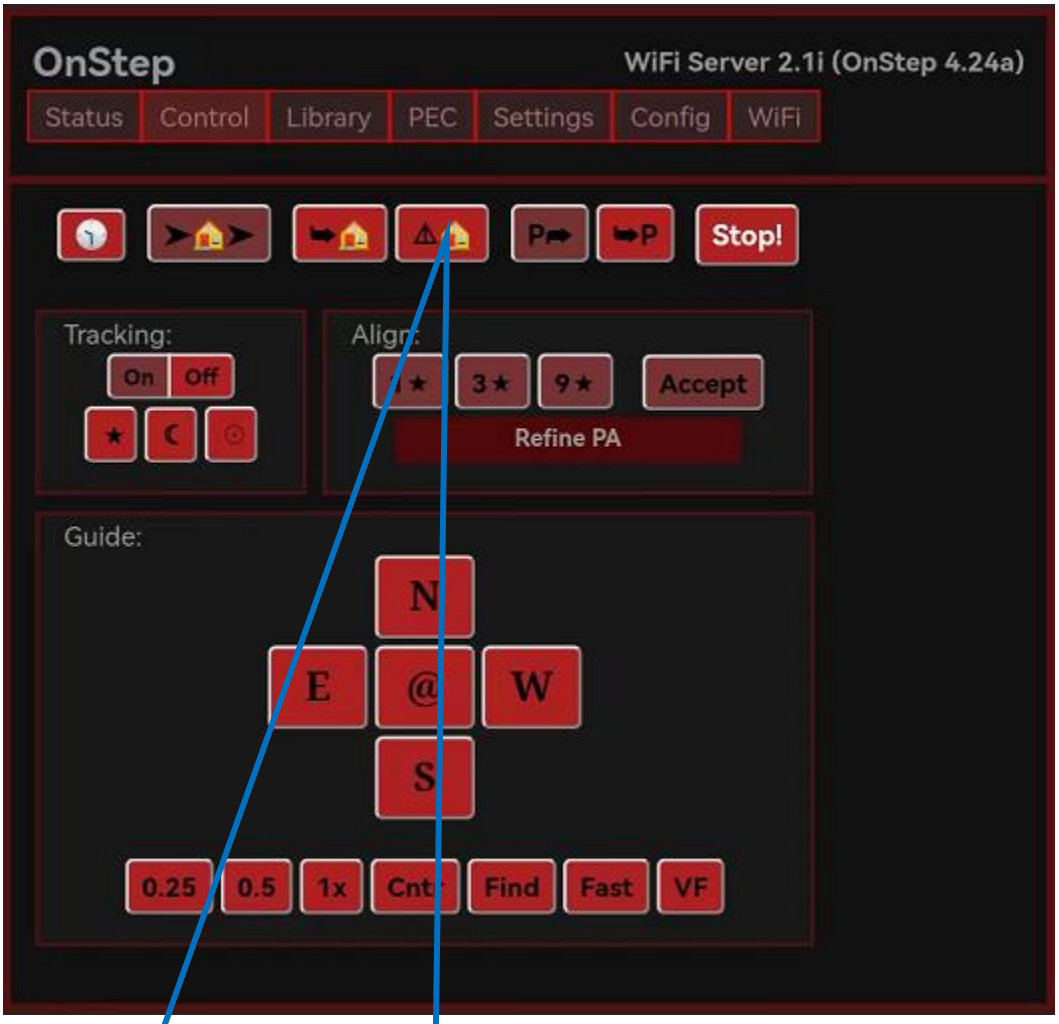

After the tracking is enabled, manually control the Equatorial mount to rotate to the zero position, and click the "at home" key to remember the zero position of the mount.

⚠

Note: After setting the zero position, the Equatorial mount returns to Untracking status, and you need to click Tracking On again to start tracking

Onstep Quick Start Guide

Onstep guide

The physical zero position is different in the three modes of EM31 pro, so it needs to be set before using the equipment

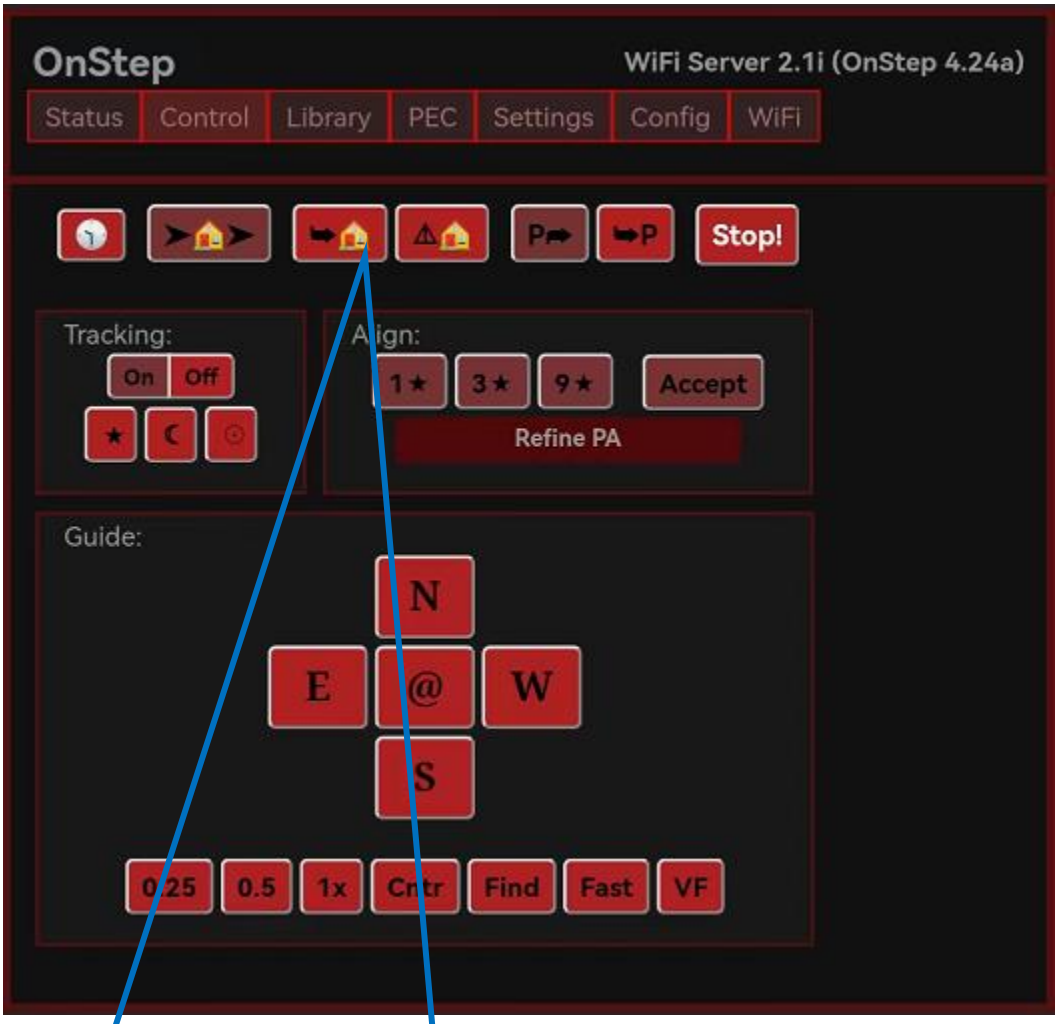

Click the “go home” button to make the mount return to the set zero position.

⚠ Note:, After powering off and powering on the mount again, the power-on-position will be zero by default. So it is necessary to reset the correct zero position. Alternatively, it is recommended to click the “go home” button to return the mount to the set zero position after each shooting is completed in order to avoid setting it again in the next use

Onstep Quick Start Guide

Onstep guide

Limit position setting

German Equatorial mount mode, DEC axis rotation limit

altitude angle limit in Altazimuth mode

⚠

Note : When the manual operation of the mount rotation exceeds the set limit, the mount will stop rotating, press the key again, the mount will only move a small angle.
Once the Goto target exceeds the limit, Goto will stop.
The limit position is related to the time, latitude and longitude coordinates and zero position setting of the mount.

Onstep Quick Start Guide

Onstep guide

The above operation can be connected through the mobile phone APP (app only supports Android system, Apple system needs to be set through the webpage)

Matching Bluetooth

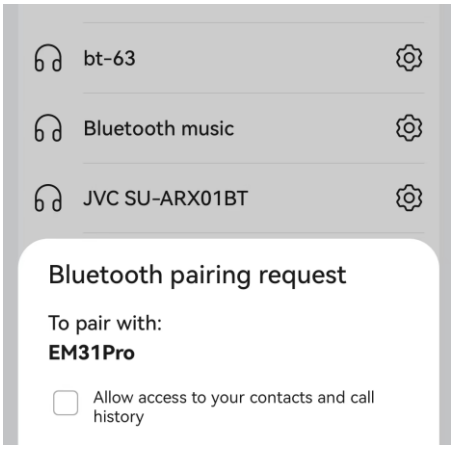

Select Connection in the APP

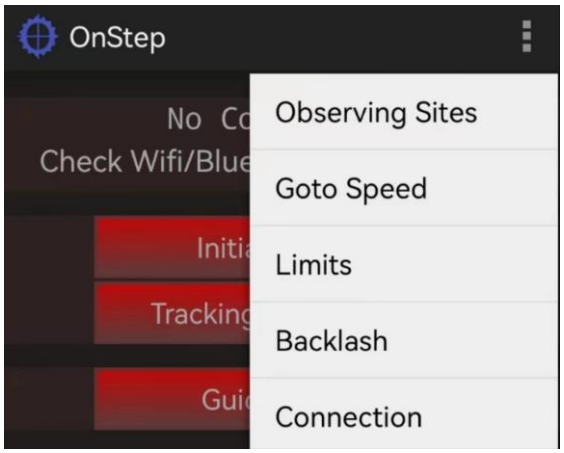

Choose Bluetooth

Complete connection

Onstep Quick Start Guide

Onstep guide

EM31 Pro Handle key function

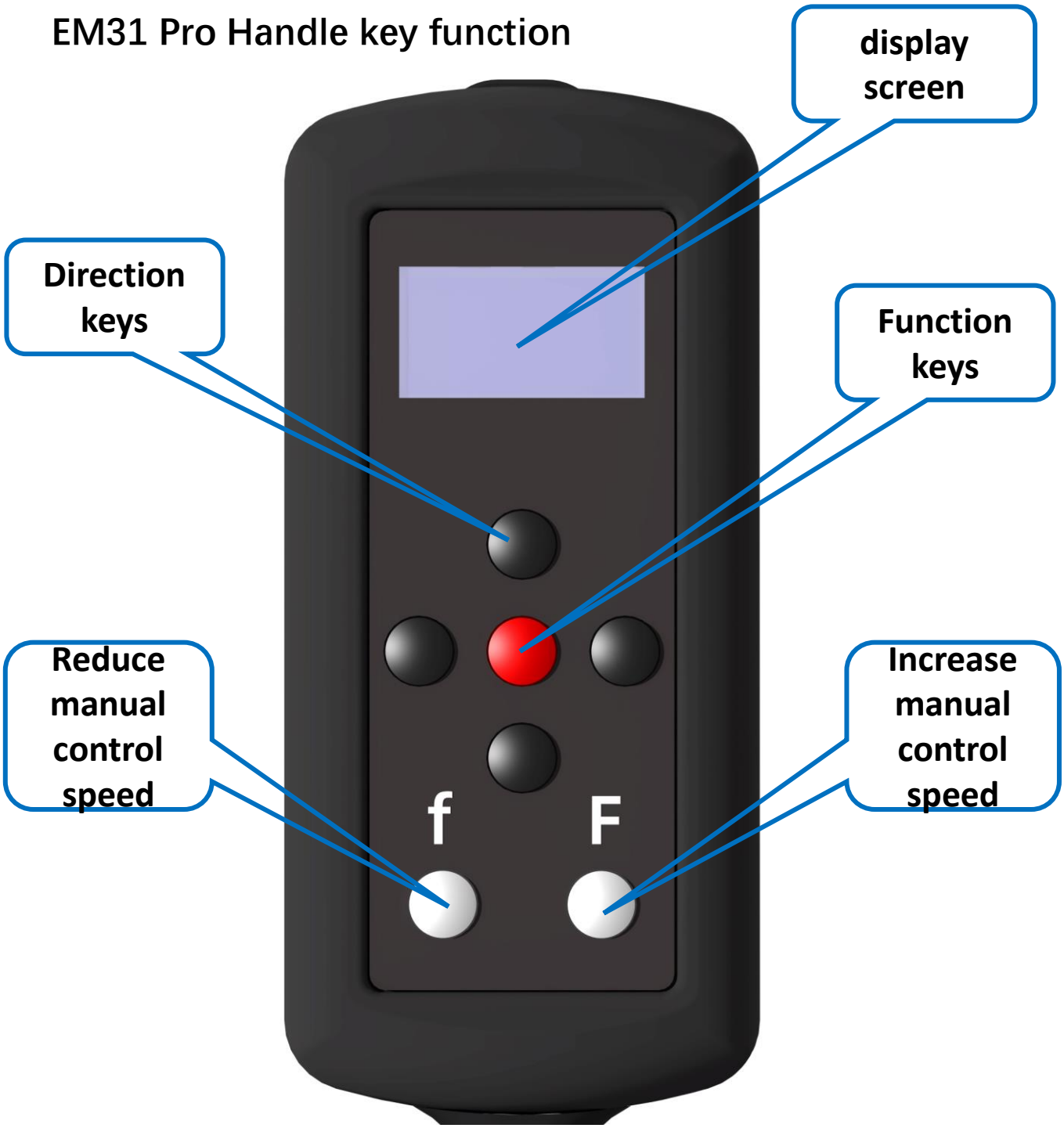

Onstep Quick Start Guide

EM31 Pro Handle key function

1.**Short Press = switching display information**
2. Long Press = entering Main Menu
3. Double Click = Feature Menu

Onstep Quick Start Guide

EM31 Pro Handle key function

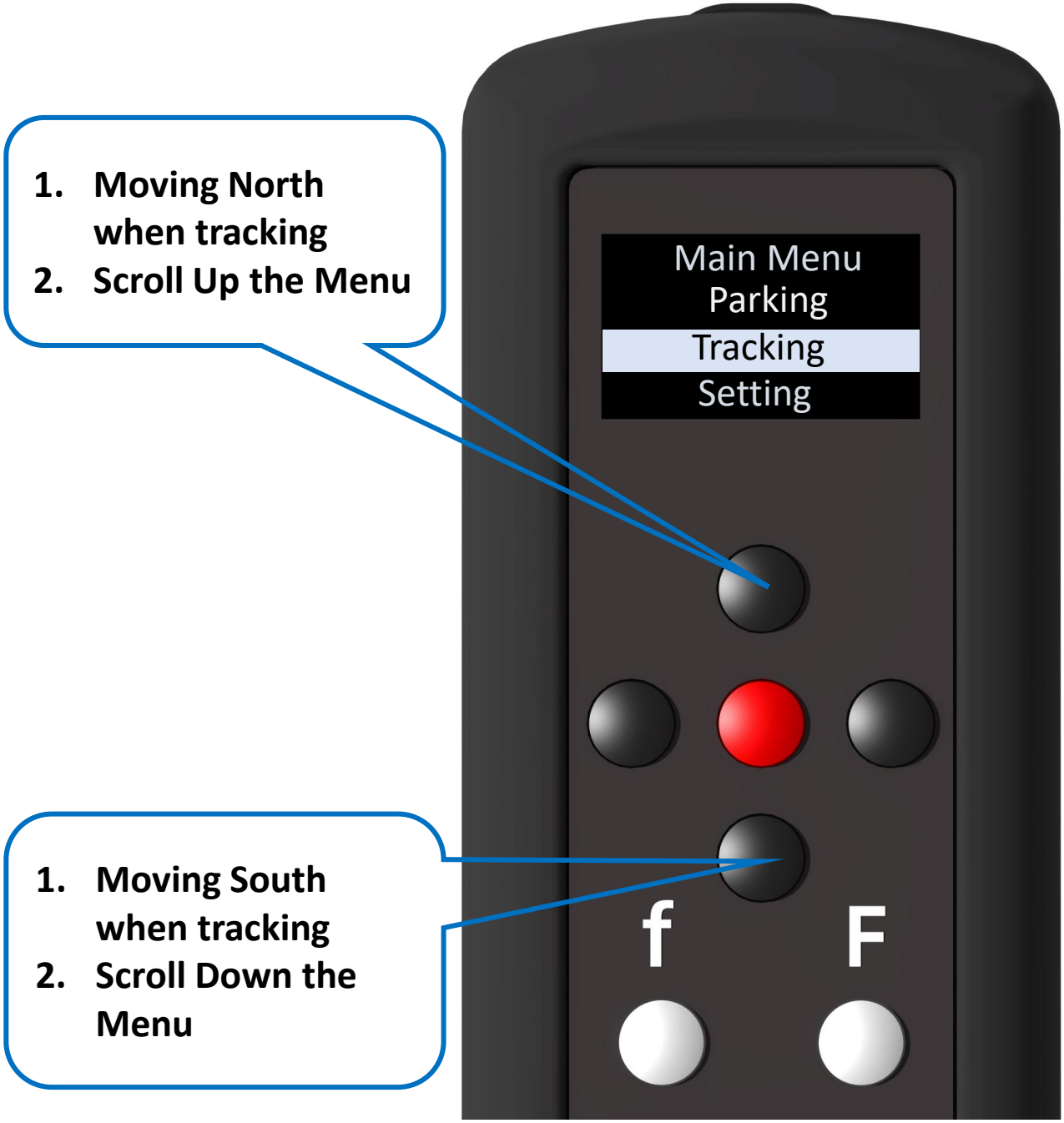

Onstep Quick Start Guide

EM31 Pro Handle key function

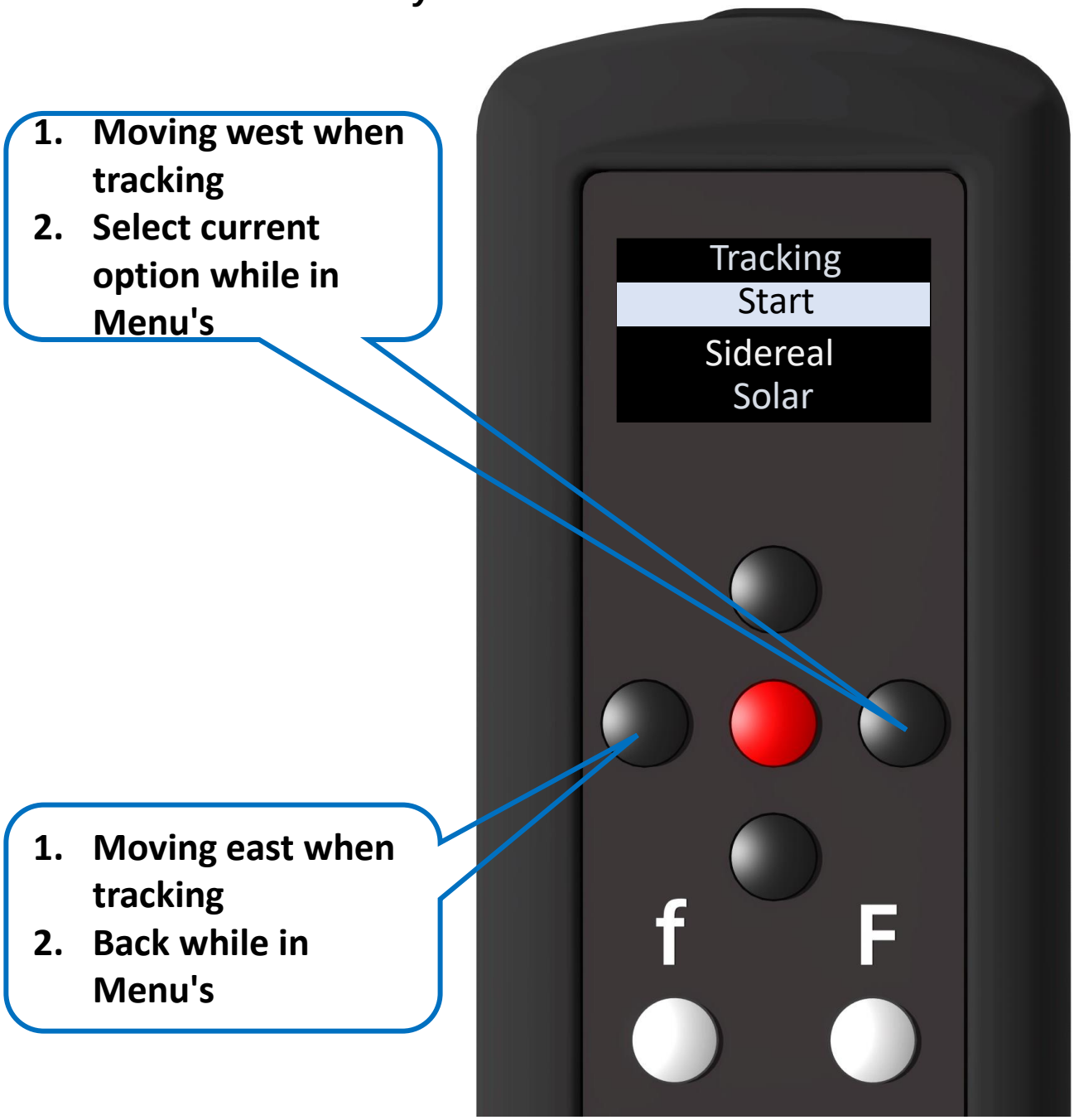

Onstep Quick Start Guide

Onstep guide

Common status icons for the handle controller

Alignment Star #1

Alignment Star #2 (#3 thru #8 not shown)

Alignment Star #9 (last possible)

Telescope is at home position. Tracking is OFF

Unknown error. Tracking has stopped

Telescope position exceeds user defined Meridian limit. Tracking has stopped

Telescope position exceeds user defined RA limits "Under Pole". Tracking has stopped

Telescope position exceeds user defined Azimuth limits. Tracking has stopped

Telescope position exceeds user defined Declination limit. Tracking has stopped

Telescope limit sensed. Tracking has stopped

Telescope position exceeds user defined Horizon or Overhead limit. Tracking has stopped

Motor fault. Tracking has stopped

East side of pier. Declination is between 90 and -90

West side of pier. Declination is between 180 and 90 or -90 and -180

PEC, paused

Onstep Quick Start Guide

Onstep guide

Common status icons for the handle controller

PEC, recording

PEC, playing

Telescope is slewing

Lunar Tracking rate is selected

Solar Tracking rate is selected

King Tracking rate is selected

Sidereal Tracking rate is selected

Sidereal Tracking, refraction compensated (RA-axis only)

Sidereal Tracking, refraction compensated (Dual-axis)

Sidereal Tracking, refraction and pointing model compensated (Full)

Sidereal Tracking, refraction and pointing model compensated (Full, Dual-axis)

Tracking is OFF

Telescope is guiding

Park failure

Telescope is slewing to park position

Telescope is parked

Onstep Quick Start Guide

Onstep guide

Handle menu structure diagram

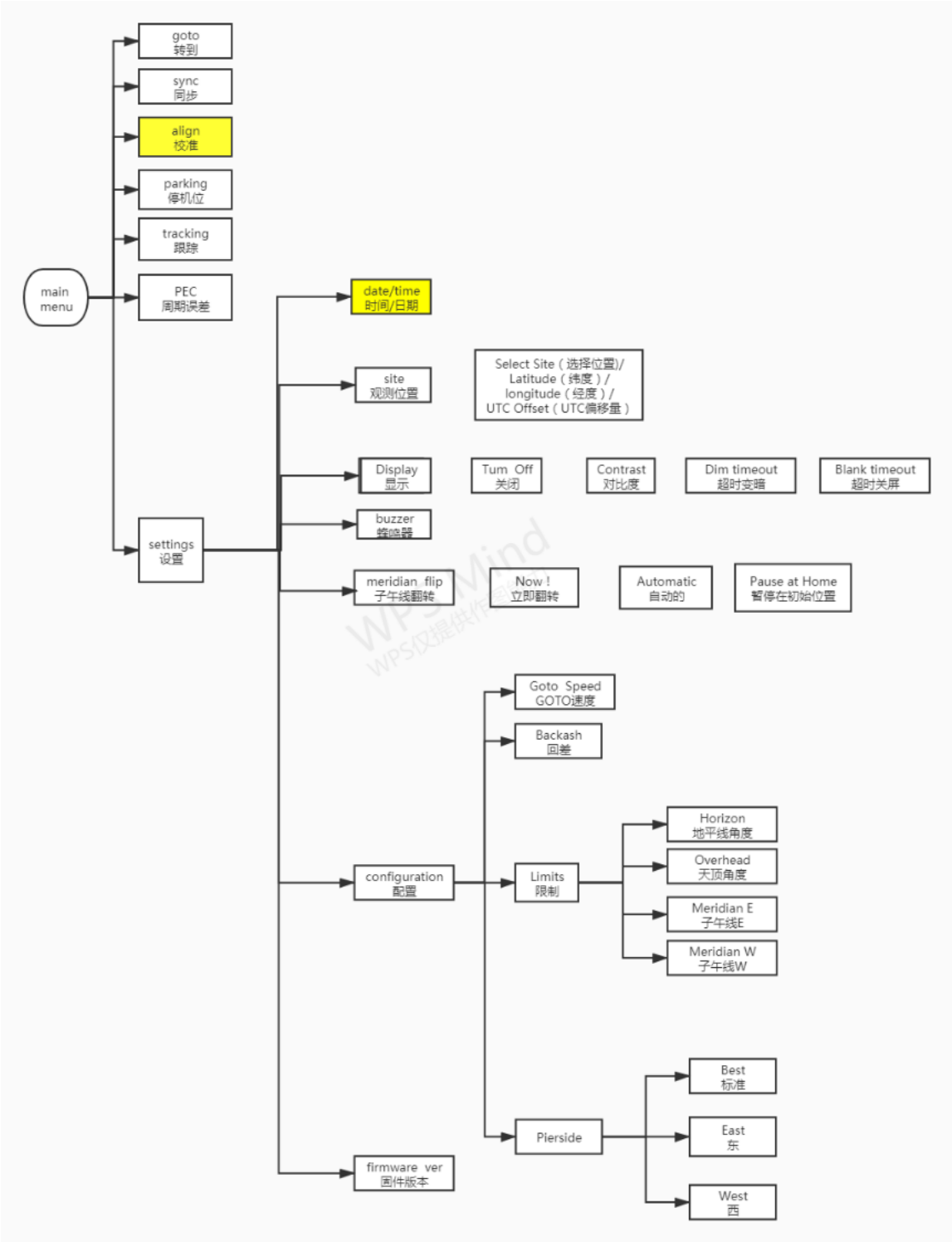

Onstep Quick Start Guide

Onstep guide

Handle menu structure diagram

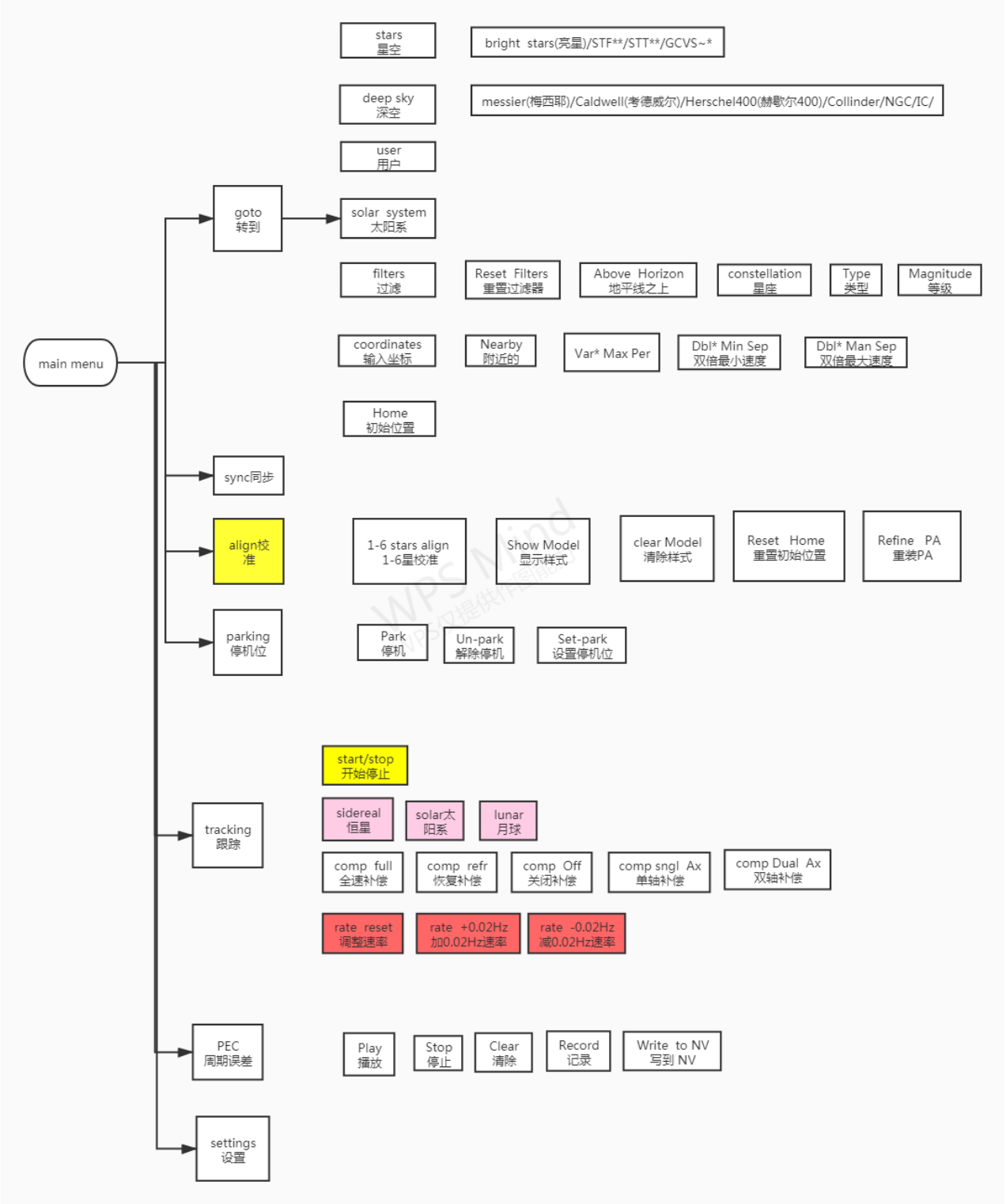

Onstep Quick Start Guide

Onstep guide

Onstep and ASIAIR connection

Equatorial mount selects
“OnStep Electronics”

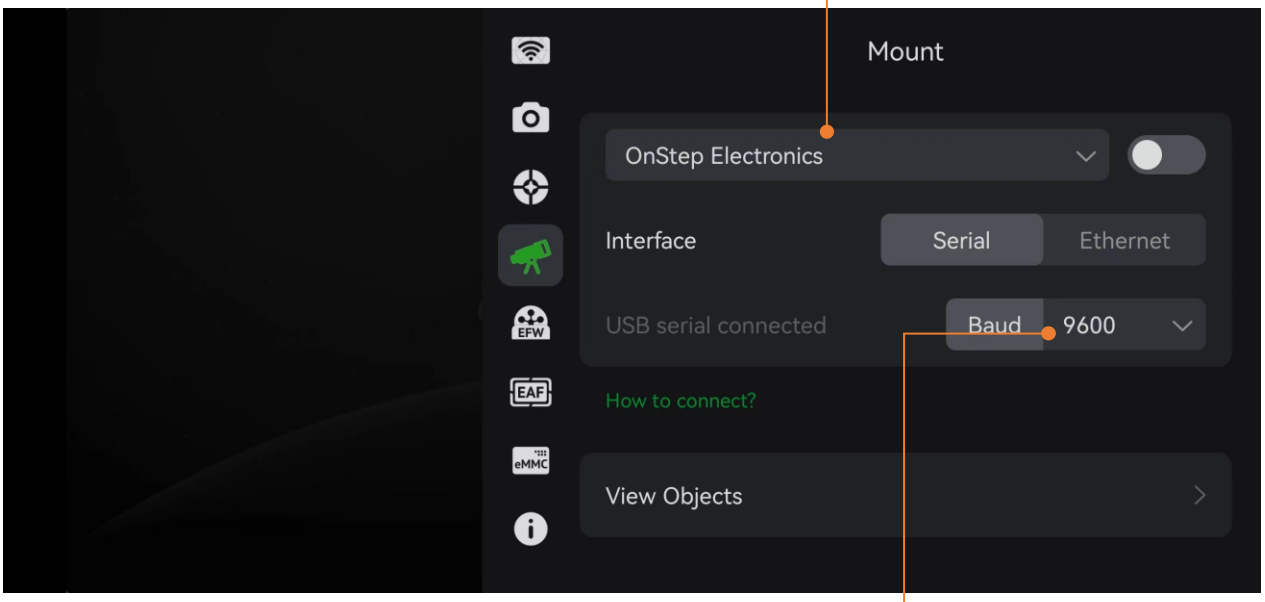

Serial port baud rate 9600

Onstep Quick Start Guide

Onstep guide

Onstep and PC connection

Installing the mount serial port driver cp2102，
Confirm that the mount serial port connection is normal in Windows Device Manager

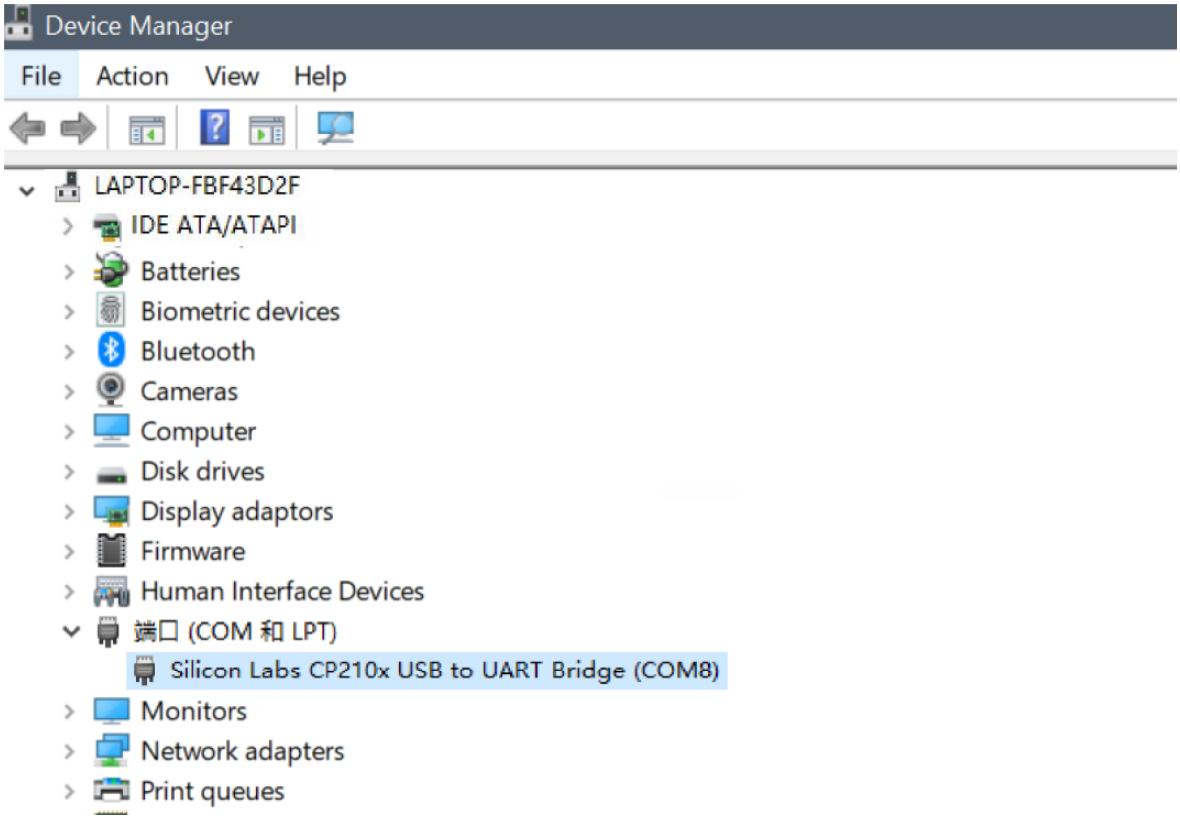

Install ASCOM platform

Install Onstep ASCOM driver

Onstep Quick Start Guide

Onstep guide

Onstep and PC connection

Select the correct serial port (check the correct port number in Device Manager) and connect the mount

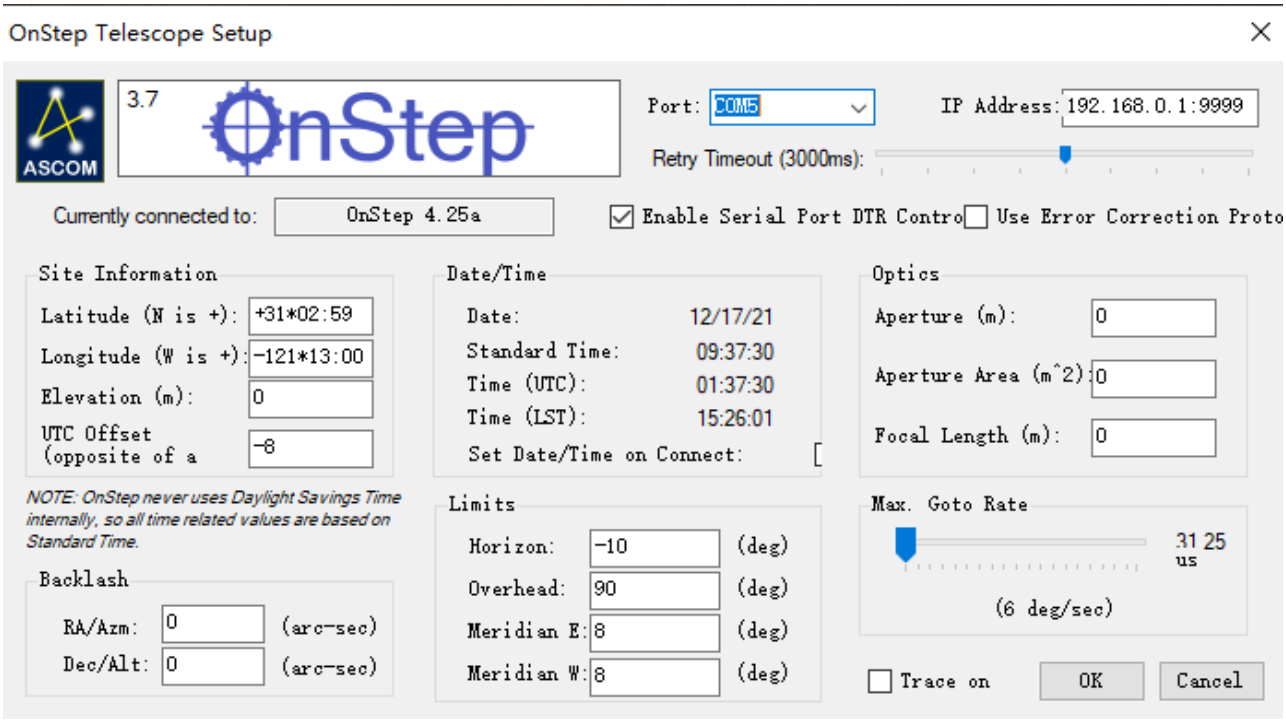

Firmware Update

Firmware update

Connect the 12v power supply for the equatorial mount and power on

Use the USB cable to connect the equatorial mount and PC (test is windows 10 system)

Open the firmware programming software

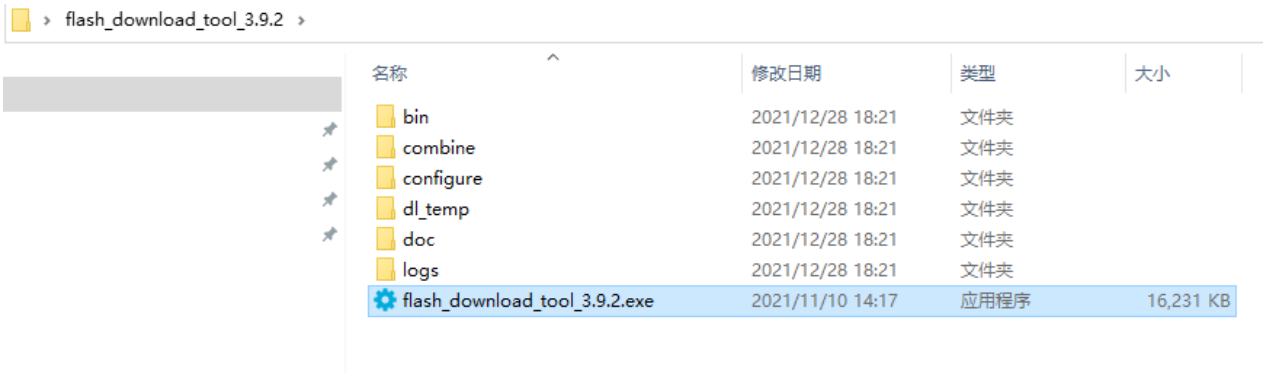

Select ESP2 and develop and confirm

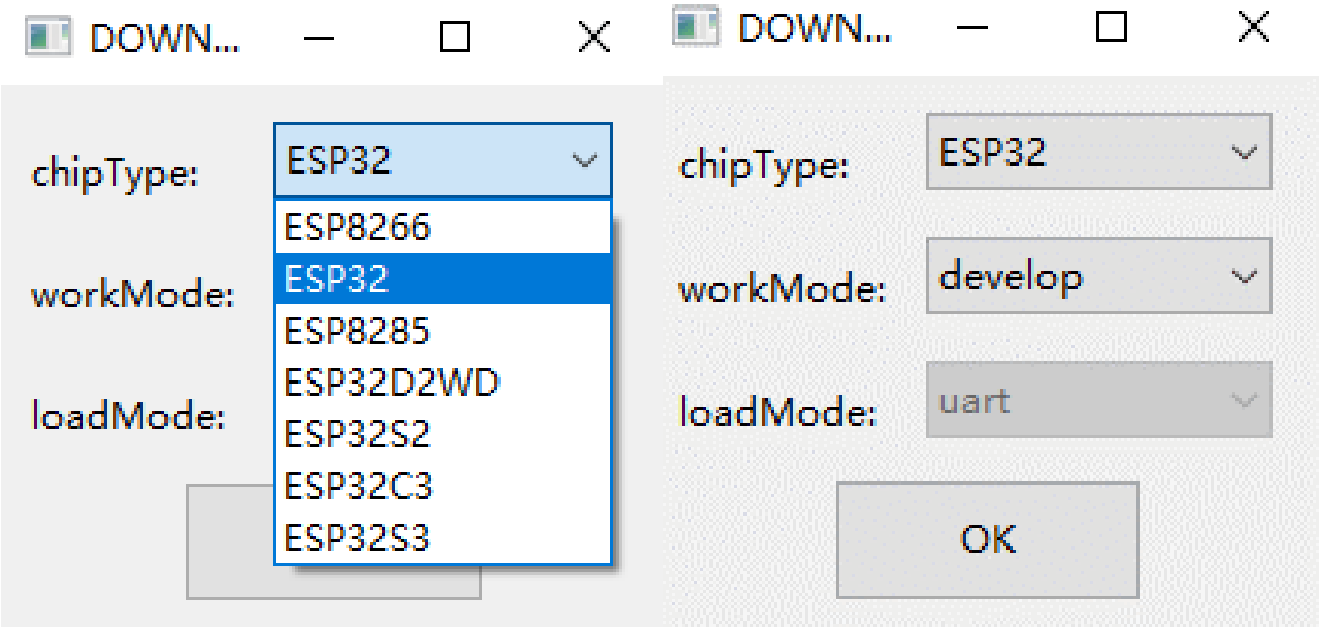

Firmware Update

Firmware update

Upload interface

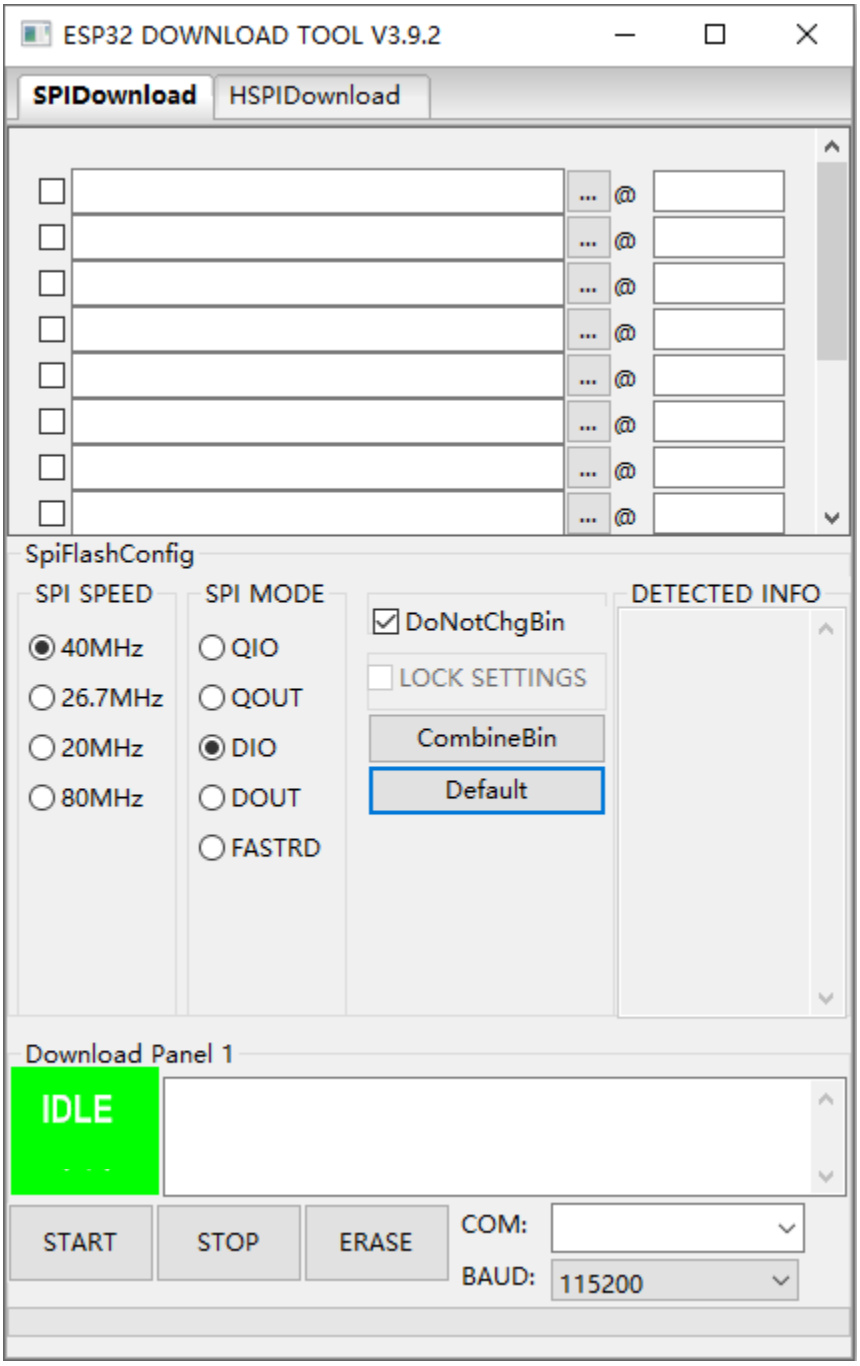

Firmware Update

Firmware update

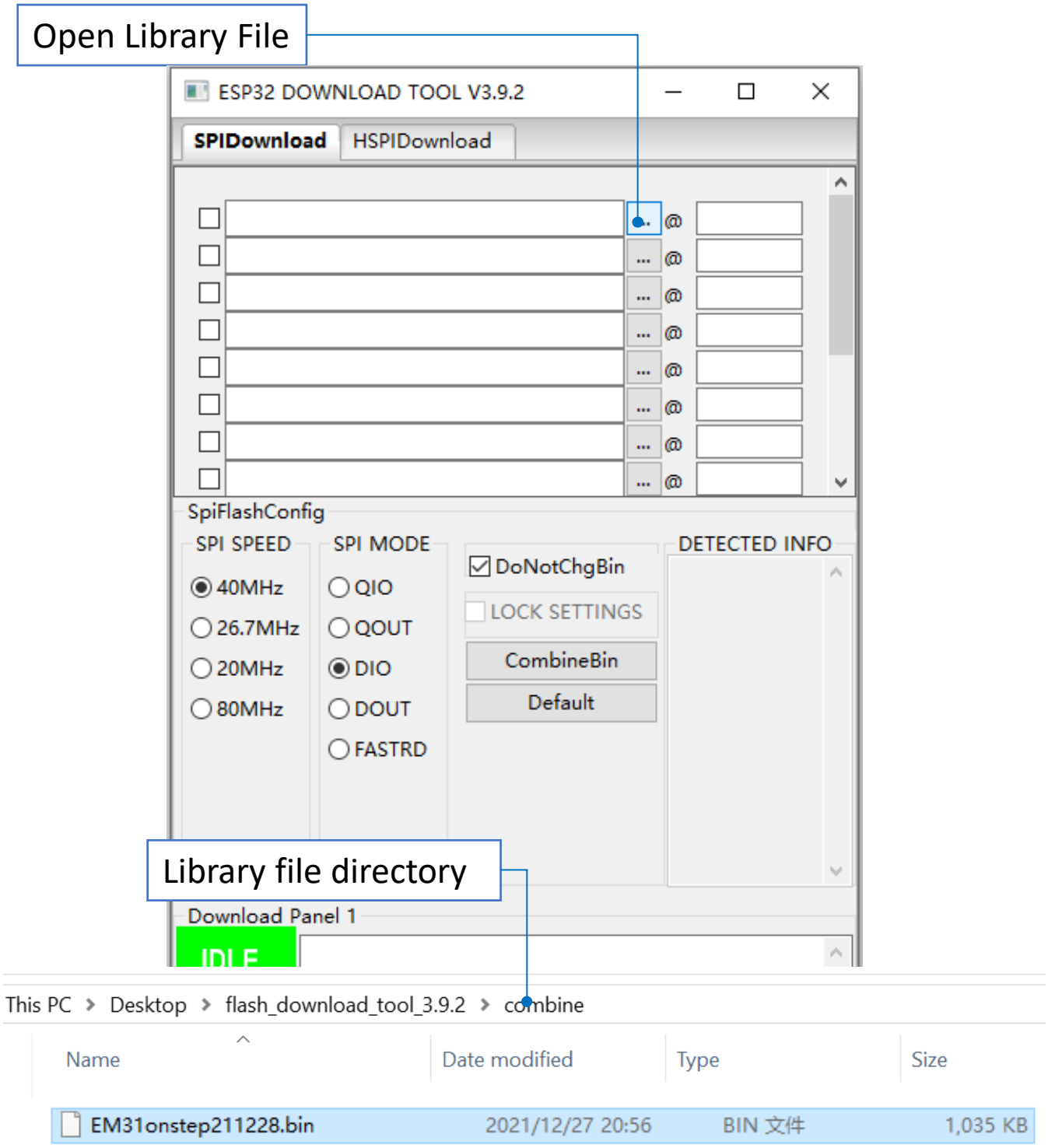

Firmware Update

Firmware update

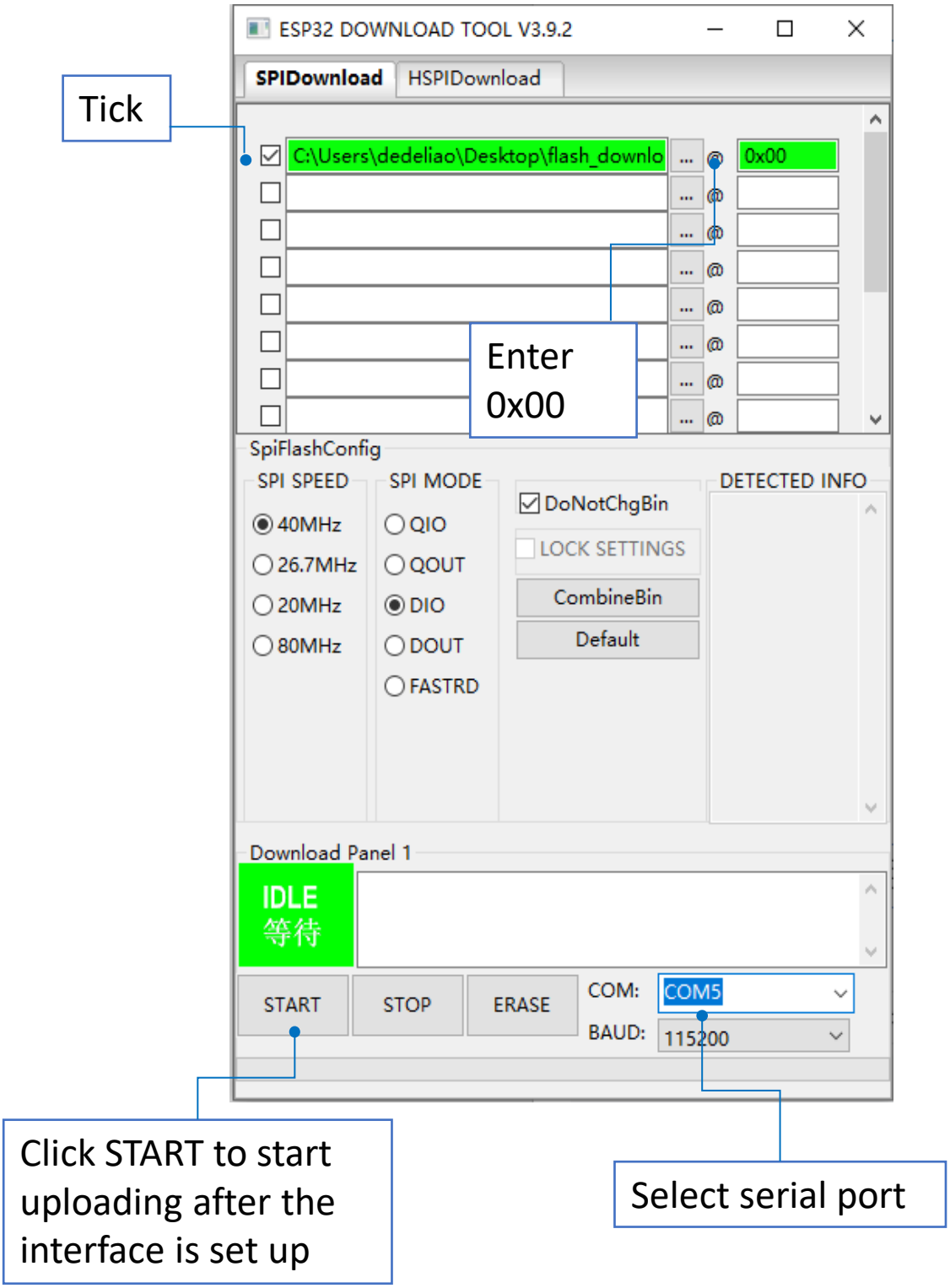

Firmware Update

Firmware update

Start the upload process

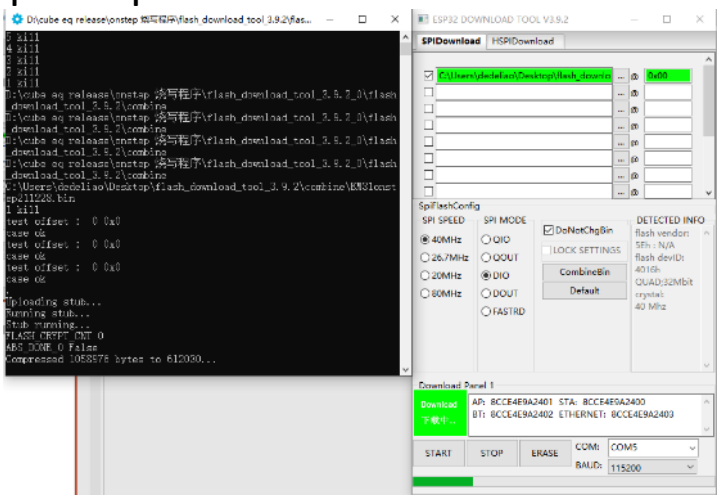

The upload program is complete, and the status bar on the left shows “is stub and send flash finish”

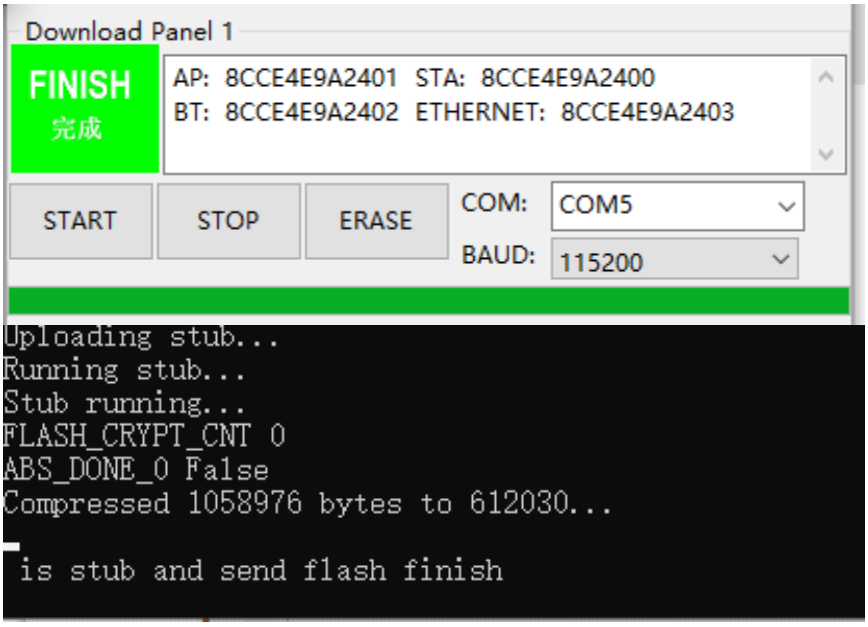

After the firmware update is completed, disconnect all power connections (including the 12V power supply and USB cable) to disconnect the equatorial mount, and then turn on the power after 6s, the equatorial mount will enter into normal working status.

Warranty Statement

Warranty

Thank you for purchasing the EM31Pro Harmonic Equatorial Mount. To ensure you have the best experience with our product, we provide a two-year warranty service for the EM31Pro Harmonic Equatorial Mount. Below are the specific warranty terms and conditions:

Warranty Period

This product is covered by a two-year warranty starting from the date of purchase.

Warranty Coverage

During the warranty period, if the product exhibits any material or workmanship defects under normal use, we will provide free repair or replacement services. This includes, but is not limited to:

- Motor failure
- Control board failure
- Mechanical structure damage

Warranty Exclusions

The warranty does not cover the following situations:

1. **Human-induced damage**: Including but not limited to damage caused by dropping, impact, submersion, excessive use, etc.
2. **Unauthorized repair or modification**: If the product has been repaired or modified by an unauthorized service provider, the warranty will be void.
3. **Accidents or natural disasters**: Including but not limited to fire, earthquake, flood, lightning, etc.

Warranty Statement

4. Normal wear and tear: Such as normal wear and tear, scratches on the exterior, etc.

Warranty Service Procedure

1.Contact Customer Service: If your product requires repair, please first contact the after-sales service of the purchase channel or directly contact our customer service center. Provide a detailed description of the fault.

2.Fault Diagnosis: We will conduct a preliminary diagnosis of the reported fault via email. If further inspection is needed, we will guide you to send the product to the designated repair center.

3.Repair or Replacement: Once the product is confirmed to be within the warranty conditions, we will provide free repair services. If the product cannot be repaired, we will replace it with the same model or an equivalent product of the same value.

4.Return Shipping: The repaired or replaced product will be shipped back to you via courier.

Important Notes

- Before sending the product, please ensure it is properly packaged to avoid further damage during transit.
- When shipping, include a description of the fault.

If you have any questions or need further assistance, please feel free to contact our customer service team. We are dedicated to serving you.

Customer Service Email: support@easeastro.com

Thank you for your understanding and support

Any Changes or modifications not expressly approved by the party responsible for compliance could void the user's authority to operate the equipment.

This device complies with part 15 of the FCC Rules. Operation is subject to the following two conditions: (1) This device may not cause harmful interference, and (2) this device must accept any interference received, including interference that may cause undesired operation.

Note: This equipment has been tested and found to comply with the limits for a Class B digital device, pursuant to part 15 of the FCC Rules. These limits are designed to provide reasonable protection against harmful interference in a residential installation. This equipment generates, uses and can radiate radio frequency energy and, if not installed and used in accordance with the instructions, may cause harmful interference to radio communications. However, there is no guarantee that interference will not occur in a particular installation. If this equipment does cause harmful interference to radio or television reception, which can be determined by turning the equipment off and on, the user is encouraged to try to correct the interference by one or more of the following measures:

—Reorient or relocate the receiving antenna.

—Increase the separation between the equipment and receiver.

—Connect the equipment into an outlet on a circuit different from that to which the receiver is connected.

—Consult the dealer or an experienced radio/TV technician for help.

FCC Radiation Exposure Statement:

This equipment complies with FCC radiation exposure limits set forth for an uncontrolled environment .This equipment should be installed and operated with minimum distance 9.5cm between the radiator& your body.

This transmitter must not be co-located or operating in conjunction with any other antenna or transmitter.